SONY

PORTABLE COLOR VIDEO PROJECTOR

FP-60 Beta β/62 Vidimagic

RM-27

REVISED



Photograph is FP-60

1 INDEX PICTURE TUBE, 1 LENS, DIRECT PROJECTION SYSTEM

SERVICE MANUAL

PJ ADJUSTMENTS

SAFETY-RELATED COMPONENT WARNING !!

COMPONENTS IDENTIFIED BY SHADING AND MARK ⚠ ON THE SCHEMATIC DIAGRAMS, EXPLODED VIEWS AND IN THE PARTS LIST ARE CRITICAL TO SAFE OPERATION. REPLACE THESE COMPONENTS WITH SONY PARTS WHOSE PART NUMBERS APPEAR AS SHOWN IN THIS MANUAL OR IN SUPPLEMENTS PUBLISHED BY SONY. CIRCUIT ADJUSTMENTS THAT ARE CRITICAL TO SAFE OPERATION ARE IDENTIFIED IN THIS MANUAL. FOLLOW THESE PROCEDURES WHENEVER CRITICAL COMPONENTS ARE REPLACED OR IMPROPER OPERATION IS SUSPECTED.

SAFETY CHECK-OUT

After correcting the original service problem, perform the following safety checks before releasing the set to the customer:

1. Check the area of your repair for unsoldered or poorly-soldered connections. Check the entire board surface for solder splashes and bridges.
2. Check the interboard wiring to ensure that no wires are "pinched" or contact high-wattage resistors.
3. Check that all control knobs, shields, covers, ground straps, and mounting hardware have been replaced. Be absolutely certain that you have replaced all the insulators.
4. Look for unauthorized replacement parts, particularly transistors, that were installed during a previous repair. Point them out to the customer and recommend their replacement.
5. Look for parts which, though functioning, show obvious signs of deterioration. Point them out to the customer and recommend their replacement.
6. Check the line cord for cracks and abrasion. Recommend the replacement of any such line cord to the customer.
7. Check the condition of the monopole antenna (if any).
   Make sure the end is not broken off, and has the plastic cap on it. Point out the danger of impalement on a broken antenna to the customer, and recommend the antenna's replacement.
8. Check the B+ and HV to see they are at the values specified. Make sure your instruments are accurate; be suspicious of your HV meter if sets always have low HV.
9. Check the antenna terminals, metal trim, "metallized" knobs, screws, and all other exposed metal parts for AC leakage. Check leakage as described below.

LEAKAGE TEST

The AC leakage from any exposed metal part to earth ground and from all exposed metal parts to any exposed metal part having a return to chassis, must not exceed 0.5 mA (500 microampers). Leakage current can be measured by any one of three methods.

1. A commercial leakage tester, such as the Simpson 229 or RCA WT-540A. Follow the manufacturers' instructions to use these instruments.
2. A battery-operated AC milliammeter. The Data Precision 245 digital multimeter is suitable for this job.
3. Measuring the voltage drop across a resistor by means of a VOM or battery-operated AC voltmeter. The "limit" indication is 0.75 V, so analog meters must have an accurate low-voltage scale. The Simpson 250 and Sanwa SH-63Trd are examples of a passive VOM that is suitable. Nearly all battery operated digital multimeters that have a 2 V AC range are suitable. (See Fig. A)

HOW TO FIND A GOOD EARTH GROUND

A cold-water pipe is guaranteed earth ground; the cover-plate retaining screw on most AC outlet boxes is also at earth ground. If the retaining screw is to be used as your earth-ground, verify that it is at ground by measuring the resistance between it and a cold-water pipe with an ohmmeter. The reading should be zero ohms. If a cold-water pipe is not accessible, connect a 60–100 watts trouble light (not a neon lamp) between the hot side of the receptacle and the retaining screw. Try both slots, if necessary, to locate the hot side of the line, the lamp should light at normal brilliance if the screw is at ground potential. (See Fig. B)

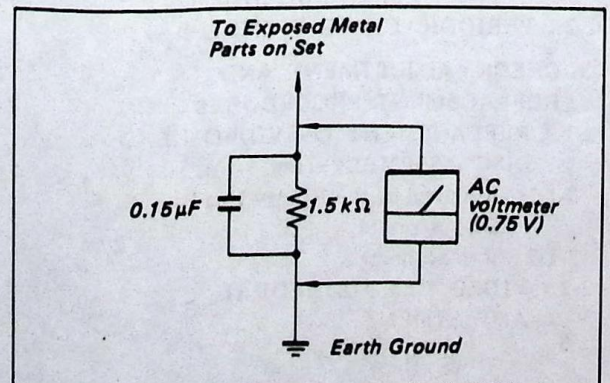

Fig. A. Using an AC voltmeter to check AC leakage.

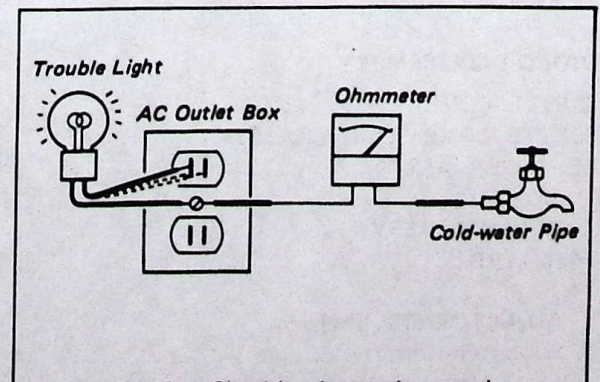

Fig. B. Checking for earth ground.

TABLE OF CONTENTS

Section	Title	Page
1.	**GENERAL**	
1-1.	Features	1-1
1-2.	Specifications	1-2
1-3.	Location and Function of Parts and Contorls	1-3
1-4.	Installation	1-5
1-5.	Focus Adjustment	1-6
1-6.	Viewing TV Programs	1-7
1-7.	Important Reminders	1-8
1-8.	Recording TV Programs	1-8
1-9.	Viewing Playback	1-9
1-10.	To Locate a Particular Point on the Video Tape	1-9
1-11.	Picture Adjustments	1-11
1-12.	Presetting Channels	1-11
1-13.	Use of the Optional Remote Control Unit	1-12
1-14.	Connecting Video/Audio Equipment	1-13
1-15.	Antenna/Cable Connection	1-14
1-16.	Quick Reference A (Projector)	1-15
1-17.	Quick Reference B (Projector)	1-17
1-18.	Quick Reference C (Video)	1-19
1-19.	Quick Reference D (Video)	1-21
2.	**DISASSEMBLY AND REPLACEMENT (Projector)**	
2-1.	Cabinet (Lower) Removal	2-1
2-2.	Cabinet Assy (Upper) Removal	2-2
2-3.	Handle Block Assy Removal	2-2
2-4.	Beta Removal	2-3
2-5.	Control Panel Removal	2-3
2-6.	Handle Assy Attaching	2-4
2-7.	Power Block Removal	2-4
2-8.	Lens Block Assy Removal	2-5
2-9.	Focus Motor Removal	2-5
2-10.	Arm (A) Driving Removal	2-6
2-11.	Lens Position Adjustment	2-6
2-12.	Lens Removal	2-7
2-13.	CRT Removal	2-7
2-14.	Checking for A and D Board Up	2-8
2-15.	Checking for BA and BB Board	2-8
2-16.	Checking for P Board	2-9
2-17.	MC Board Removal	2-9
3.	**VIDEO DISASSEMBLY**	
	CASSETTE COVER	3-1
	CASSETTE COMPARTMENT ASSY	3-1
	CASE, UPPER ASSY	3-2
	MC-1 BOARD	3-2
	FRONT PANEL ASSY	3-3
	MA-6 BOARD	3-3
4.	**ADJUSTMENTS (Projector)**	
4-1.	Setup Adjustments	4-2
4-1-1.	DY Mounting Angle Adjustment	4-2
4-1-2.	Horizontal ID Error Adjustment	4-2
4-1-3.	FOCUS Adjustment	4-4
4-1-4.	CUT OFF Adjustment	4-4
4-1-5.	R/I WHT, A/D OFFSET Adjustment	4-4
4-1-6.	BKG LEVEL Adjustment	4-5
4-1-7.	Color Uniformity Adjustment	4-5
4-1-8.	White Balance Adjustment	4-6
4-1-9.	Peak Luminance Adjustment	4-6
4-2.	Circuit Adjustments	4-7
4-2-1.	A Board Adjustment	4-7
4-2-2.	BA Board Adjustments	4-8
4-2-3.	BB Board Adjustments	4-9
4-2-4.	D Board Adjustments	4-12
4-2-5.	P Board Adjustments	4-15
4-2-6.	Hold Down Adjustments	4-19
5.	**VIDEO ADJUSTMENT**	
1.	**CHECKING, ALIGNMENT AND REPLACEMENT AND MECHANICAL SECTION**	5-1
1-1.	REMOVAL OF THE CASE	5-1
1-1-1.	Removal of Case Assembly (Fig. 1-1)	5-1
1-1-2.	Removal of Front Panel (Fig. 1-2)	5-2
1-1-3.	Removal of the Mechanism Chassis	5-2
1-2.	PRECAUTIONS WHEN SERVICING	5-3
1-3.	MECHANICAL OPERATION WITHOUT CASSETTE INSTALLED	5-3
1-3-1.	Completing Threading Without Cassette (This state is called "STOP mode" in this guide.)	5-3
1-3-2.	Setting Playback without Cassette Installed	5-3
1-3-3.	Setting Record Mode without a Cassette	5-3
1-4.	LIST OF SERVICE UNITS AND TOOLS	5-4
2.	**PERIODIC CHECK AND MAINTENANCE**	5-5
2-1.	MAINTENANCE AFTER REPAIR	5-5
2-1-1.	Rotary Head Disc Assembly	5-5
2-1-2.	Cleaning of the Tape Transportation System	5-5
2-1-3.	Cleaning of the Drive System	5-5
2-2.	PERIODIC CHECK ITEMS	5-5
3.	**CHECK, ADJUSTMENT AND REPLACEMENT PROCEDURES**	5-6
3-1.	REPLACEMENT OF VIDEO HEAD DISC ASSEMBLY (Fig. 3-1)	5-6
3-1-1.	Removal of the Rotary Head Disc Assembly	5-6
3-1-2.	Replacement	5-6
3-2.	VIDEO HEAD DIHEDRAL ADJUSTMENT	5-7

Section	Title	Page
3-3.	REPLACEMENT AND RE-ASSEMBLY OF DRUM ASSEMBLY	5-8
3-3-1.	Replacement of Drum Assembly	5-8
3-3-2.	Motor Clealance Adjustment when Replacing the Drum Assembly	5-9
3-3-3.	Removal of Stator and Rotor when Replacing the Drum (Fig. 3-6)	5-9
3-4.	REPLACEMENT AND ADJUSTMENT OF CAPSTAN DC MOTOR	5-10
3-4-1.	Removing Capstan Motor (Fig. 3-7)	5-10
3-4-2.	Perpendicular Adjustment of Capstan Shaft	5-10
3-5.	REMOVAL OF TENSION PICKUP ASSEMBLY (Fig. 3-9)	5-10
3-6.	REMOVAL OF CASSETTE COMPARTMENT (Fig. 3-10)	5-11
3-7.	REMOVAL OF REEL MOTOR (Fig. 3-11)	5-12
3-8.	THREADING/UNTHREADING ADJUSTMENT	5-12
3-8-1.	Checking Cassette Detection Switch Operation	5-12
3-8-2.	Unthreading Check	5-12
3-9.	S-THREADING RING REPLACEMENT AND ADJUSTMENT	5-13
3-9-1.	Removal of S-Threading Ring	5-13
3-9-2.	Removal of S-Threading Ring Assembly (Fig. 3-16)	5-15
3-9-3.	Checking Slider Stopper Mounting (Fig. 3-17)	5-16
3-9-4.	Replacement of S-Threading Ring (Fig. 3-18)	5-16
3-10.	CHECKING AND ADJUSTMENT OF PINCH PRESS LIMITER CLEARANCE (CHECK)	5-17
3-11.	CHECKING AND ADJUSTMENT OF MICROSWITCH POSITION	5-18
3-11-1.	Checking and Adjustment of Threading End Switch (TE Switch) Position	5-18
3-11-2.	Checking and Adjustment of Unthreading End Switch (UTE Switch) Position	5-19
3-11-3.	Forward/Back Tension Measurement.	5-20
4. TAPE PATH ADJUSTMENT		5-21
4-1.	TRACKING ADJUSTMENT.	5-21
4-1-1.	Preparation	5-21
4-1-2.	Entrance Side Adjustment.	5-22
4-1-3.	Exit Side Adjustment.	5-24
4-1-4.	Reverse Waveform Confirmation	5-24
4-2.	ADJUSTMENT FOR REMOVAL OR REPLACEMENT OF THE ACE ASSEMBLY	5-25
4-2-1.	Tracking Adjustment	5-25
4-2-2.	Audio Azimuth Adjustment	5-26
4-2-3.	CTL Heard (ACE Assembly) Position Adjustment	5-26
4-2-4.	Audio Head (ACE Assembly) Height Adjustment	5-26
4-3.	ADJUSTMENT FOR REMOVAL OR REPLACEMENT OF THE CAPSTAN MOTOR	5-27
5. ELECTRICAL ALIGNMENT		5-29
5-1.	POWER SUPPLY CHECK (MA-6 Board).	5-31
5-2.	SERVO SYSTEM ALIGNMENT.	5-31
5-2-1.	Reel Servo System Alignment	5-31
5-2-2.	Drum Servo System Alignment	5-31
5-2-3.	Capstan Servo System Alignment	5-33
5-3.	VIDEO SYSTEM ALIGNMENT.	5-35
5-4.	AUDIO SYSTEM ADJUSTMENT (MC-1 BOARD).	5-41
6. OPERATION (Projector)	This section will be issued supplement.	
7. VIDEO OPERATION		
7-1. VIDEO CIRCUITS		7-1
1-1.	RECORDING CIRCUITS.	7-7
1-1-1.	COMB Filters 1 and 2.	7-7
1-2.	PLAYBACK CIRCUITS.	7-11
1-2-1.	COMB Filter 1	7-11
1-2-2.	Automatic Frequency Drift Rejector (AFDR)	7-13
1-2-3.	Video DCC Circuit.	7-13
1-2-4.	Playback Under Varying Speed (JOG).	7-14
7-2. SYSTEM CONTROL.		7-15
2-1.	GENERAL.	7-15
2-2.	FUNCTIONS OF CPU1 (IC1 on the FD-3 Board).	7-20
2-3.	FUNCTION OF CPU2 (IC2 on the FD-3 Board).	7-23
2-4.	POWER SUPPLY SECTION	7-25
2-5.	SOLENOID DRIVE CIRCUITS	7-26
2-5-1.	Pinch Solenoid Driver.	7-26
2-5-2.	Brake Solenoid Driver	7-26
2-6.	THREADING/UNTHREADING CONTROL.	7-27
2-7.	SENSOR CIRCUITS.	7-28
2-7-1.	End Sensors and Sense Control Circuit	7-28
2-7-2.	Dew Sensor and Heater.	7-29
2-7-3.	Power Failure Detecting Circuit	7-30
2-8.	OTHER CIRCUITS.	7-31
2-8-1.	Clock Generator and its Control.	7-31
2-8-2.	Buzzer Circuit.	7-31
2-8-3.	Initial Reset Circuit	7-32
2-8-4.	Liquid Crystal Display Panel (LCD-1).	7-33
2-8-5.	Insert Function.	7-33

Section	Title	Page
7-3.	**SERVO CIRCUITS**	7-35
3-2.	CAPSTAN/DRUM SERVO CIRCUITS	7-39
3-2-1.	Drum Servo Circuit	7-39
3-2-2.	Capstan Servo Circuit	7-39
3-2-3.	Servo Control During C/R	7-39
3-2-4.	CTL and Tracking Control	7-39
3-2-5.	IC1 (MB3759PF) of SD-1	7-40
3-2-6.	Timing Diagrams	7-40
3-2-7.	TC4030BF	7-43
3-2-8.	Timing Diagram of PG-A, PG-B and PG-S	7-43
3-2-9.	Timing Diagram of the FG Circuit	7-43
3-2-10.	Timing Diagrams of the SP-1 Board's CTL Circuit and CTL-RF SW P	7-44
3-3.	OPERATIONS OF PAUSE, MAKING PICTURES CONTINUOUS, REC REVIEW AND INSERT	7-44
3-3-1.	Operation of PB Pause → Release of Pause (See Fig. 3-13.)	7-44
3-3-2.	Making Pictures Continuous (REC PAUSE → Release from (PAUSE)	7-45
3-3-3.	REC Review	7-46
3-3-4.	Insert	7-46
3-4.	REEL SERVO CIRCUIT	7-47
3-4-1.	Reel Motors	7-49
7-4.	**AUDIO CIRCUITS**	7-51
4-1.	RECORDING CIRCUITS	7-53
4-2.	PLAYBACK CIRCUITS	7-54
4-3.	RECORDING/PLAYBACK SWITCHING CIRCUIT	7-55
4-4.	BIAS/ERASING CURRENT GENERATORS	7-56
7-5.	**MECHANICAL SECTION OPERATIONS**	7-57
5-1.	CASSETTE LOADING	7-57
5-2.	THREADING	7-58
5-3.	TAPE PATH	7-60
5-4.	PLAY	7-62
5-5.	FAST FORWARD	7-64
5-6.	REWIND	7-66
5-7.	PICTURE SEARCH	7-68
5-7-1.	Forward Picture Search (CUE) and Forward FR Picture Search	7-68
5-7-2.	Reverse Picture Search (REVIEW) and Reverse FR Picture Search	7-69
5-8.	PAUSE	7-70
5-9.	RECORDING	7-71
5-10.	EJECT	7-73
5-11.	FUNCTION KEY (MODE) MATRIX	7-75
7-6.	**OTHERS**	7-76
6-1.	REMOTE CONTROL CIRCUIT	7-76
6-2.	PINCH PLUNGER EMERGENCY RELEASE CIRCUIT	7-77
6-3.	BUZZER OSCILLATION CIRCUIT	7-77
8.	**DIAGRAMS (Projector)**	
8-1.	Block Diagram	8-1
8-2.	Circuit Boards Location	8-5
8-3.	Flame Schematic Diagram	8-9
8-4.	Schematic Diagrams and Printed Wiring Boards	
	BA Board	8-11
	A, MA, MB and MC Boards	8-15
	UA, UB, BB and C Boards	8-23
	P and T Boards	8-31
	D, GA, GB and V Boards	8-39
8-5.	Semiconductors	8-46
9.	**VIDEO DIAGRAMS**	
9-1.	**CIRCUIT BOARDS LOCATION**	9-1
9-2.	**BLOCK DIAGRAMS**	
	Video Circuit	9-5
	REC System	9-9
	PB System Video	9-11
	Servo Circuit	9-13
	Reel Servo	9-17
	System Control Section	9-21
	Audio System	9-25
9-3.	**INTERFACE**	
	System Control-Serto Block	9-27
	System Control-Audio Block	9-27
	System Control-Reel Block	9-29
	System Control-Video Block	9-29
	System control-Power Block	9-31
	System Control-Tuner, Timer Block	9-31
	System Control-Mechanism Block	9-33
9-4.	**TIMING CHART**	
	Capstan Phase (REC)	9-34
	Capstan Phase (PB)	9-35
	Capstan Speed System	9-35
	Drum Phase System	9-36
	Instrumentation Counter	9-36
	Drum Speed	9-37
	Instrumentation Period Produce	9-37
	FG Circuit	9-38
	PG-A, B, S	9-39
	PG (REC/PB)	9-39
	Basic Servo Circuit	9-40
	SP-1 CTL Circuit	9-41
	CTL-RF SWP	9-41
	Pause ON/OFF	9-42
9-5.	**AUDIO LEVEL DIAGRAM**	9-42
9-6.	**SEMICONDUCTORS**	9-45
9-7.	**WAVE FORM**	9-47

Section	Title	Page
9-8.	**SCHEMATIC DIAGRAMS AND PRINTED WIRING BOARDS**	
	MA-6, LU-1 BOARD CONNECTION	9-67
	MA-6, LU-1 PRINTED WIRING BOARD	9-70
	MA-6 SCHEMATIC DIAGRAM	9-73
	MC-1 PRINTED WIRING BOARD	9-78
	MC-1 SCHEMATIC DIAGRAM	9-83
	FD-3, TS-43 PRINTED WIRING BOARD	9-86
	FD-3, TS-43 SCHEMATIC DIAGRAM	9-89
	YM-1 PRINTED WIRING BOARD	9-94
	YM-1 SCHEMATIC DIAGRAM	9-97
	OM-1 PRINTED WIRING BOARD	9-100
	OM-1 SCHEMATIC DIAGRAM	9-100
	JG-1 PRINTED WIRING BOARD	9-101
	JG-1 SCHEMATIC DIAGRAM	9-103
	VB-1 PRINTED WIRING BOARD	9-105
	VB-1 SHCMATCI DIAGRAM	9-107
	YS-1 PRINTED WIRING BOARD	9-108
	YS-1 SCHEMATIC DIAGRAM	9-109
	PE-3 PRINTED WIRING BOARD	9-111
	PE-3 SCHEMATIC DIAGRAM	9-113
	YF-1 PRINTED WIRNG BOARD	9-115
	YF-1 SCHEMATIC DIAGRAM	9-117
	RP-11 PRINTED WIRING BOARD	9-119
	RP-11 SCHEMATIC DIAGRAM	9-121
	DE-2 PRINTED WIRING BOARD	9-123
	DE-2 SCHEMATIC DIAGRAM	9-125
	CM-4 PRINTED WIRING BOARD	9-127
	CM-4 SCHEMATIC DIAGRAM	9-129
	AD-9 PRINTED WIRING BOARD	9-131
	AD-9 SCHEMATIC DIAGRAM	9-133
	SV-11 PRINTED WIRING BOARD	9-135
	SV-11 SCHEMATIC DIAGRAM	9-137
	SP-1 PRINTED WIRING BOARD	9-141
	SP-1 SCHEMATIC DIAGRAM	9-143
	SD-1 PRINTED WIRING BOARD	9-145
	SD-1 SCHEMATIC DIAGRAM	9-147
	RM-9 PRINTED WIRING BOARD	9-149
	RM-9 SCHEMATIC DIAGRAM	9-151
	CAPSTAN MOTOR WIRING BOARD	9-153
	CAPSTAN MOTOR SCHEMATIC DIAGRAM	9-155
	REEL MOTOR WIRING BOARD	9-157
	REEL MOTOR SCHEMATIC DIAGRAM	9-159
	RS-1 PRINTED WIRING BOARD	9-161
	RS-1 SCHEMATIC DIAGRAM	9-163
	MB-5 PRINTED WIRING BOARD	9-166
	MB-5 SCHEMATIC DIAGRAM	9-169
	PC-5, LM-11, PRINTED WIRING BOARD	9-171
	PC-5, LM-11 SCHEMATIC DIAGRAM	9-173
	SUPPLY SENSOR PRINTED WIRING BOARD	9-175
	SUPPLY SENSOR SCHEMATIC DIAGRAM	9-175
	TAKE UP SENSOR PRINTED WIRING BOARD	9-176
	TAKE UP SENSOR SCHEMATIC DIAGRAM	9-176
10.	**EXPLODED VIEWS (Projector)**	
	10-1. Cabinet	10-1
	10-2. Chassis (1)	10-2
	10-3. CRT	10-3
	10-4. Chassis (2)	10-4
11.	**VIDEO EXPLODED VIEW**	
	11-1. CABINET	11-2
	11-2. FRONT PANEL	11-3
	11-3. PRINTED CIRCUIT BOARD	11-4
	11-4. CASSETTE COMPARTMENT ASSEMBLY	11-5
	11-5. ACE HEAD ASSEMBLY	11-6
	11-6. PINCH ROLLER SOLENOID ASSEMBLY	11-7
	11-7. LOADING MOTOR ASSEMBLY	11-8
	11-8. TP AND LOCK ARM ASSEMBLY	11-9
	11-9. SHUTLE GUIDE AND ULE SWITCH ASSEMBLY	11-10
	11-10. DRUM ASSEMBLY	11-11
	11-11. LOADING RING ASSEMBLY	11-12
	11-12. REEL MOTOR AND CAPSTAN MOTOR ASSEMBLY	11-13
	11-13. CASSETTE CONTROL LOCK ASSEMBLY	11-14
	11-14. RP-11 BOARD	11-15
	11-15. HARD WARE LIST	11-16
12.	**ELECTRICAL PARTS LIST (Projector)**	
	BA Board	12-1
	BB Board	12-3
	P Board	12-7
	GA, GB and A Boards	12-10
	MB, MC and MA Boards	12-13
	C Board	12-14
	D Board	12-15
	V and T Boards	12-18
	Miscellaneous	12-19
13.	**VIDEO PARTS LIST**	
	MA-6 Board	13-1
	MC-1 Board	13-3
	RP-11 Board	13-4
	MB-5 Board	13-5
	FD-3 Board	13-6
	OM-1 Board	13-8
	LM-11 Board	13-9

Section	*Title*	*Page*
	YF-1 Board	13-9
	YM-1 Board	13-11
	YS-1 Board	13-11
	PE-3 Board	13-13
	DE-2 Board	13-13
	CM-4 Board	13-14
	VB-1 Board	13-15
	JG-1 Board	13-15
	RM-9 Board	13-16
	SV-11 Board	13-18
	SP-1 Board	13-20
	SD-1 Board	13-20
	PC-5 Board	13-21
	AD-9 Board	13-22
	TS-43 Board	13-22
	LU-1 Board	13-22

14. REMOTE COMMANDER RM-27

SECTION 1
GENERAL
(Projector:FP-60/62)

TABLE OF CONTENS

Section	Title	Page
1. GENERAL		
1-1.	Features	1-1
1-2.	Specifications	1-2
1-3.	Location and Function of Parts and Controls	1-3
1-4.	Installation	1-5
1-5.	Focus Adjustment	1-6
1-6.	Viewing TV Programs	1-7
1-7.	Important Reminders	1-8
1-8.	Recording TV Programs	1-8
1-9.	Viewing Playback	1-9
1-10.	To Locate a Particular Point on the Video Tape	1-9
1-11.	Picture Adjustments	1-11
1-12.	Presetting Channels	1-11
1-13.	Use of the Optional Remote Control Unit	1-12
1-14.	Connecting Video/Audio Equipment	1-13
1-15.	Antenna/Cable Connection	1-14
1-16.	Quick Reference A (Projector)	1-15
1-17.	Quick Reference B (Projector)	1-17
1-18.	Quick Reference C (Video)	1-19
1-19.	Quick Reference D (Video)	1-21

GENERAL

SECTION 1
GENERAL

1-1. FEATURES

- Because the 3 primary colors are handled by a single tube and lens, registration is not necessary.
- Compact and lightweight projector can be used on a desk or the floor.
- Screen size variable from 30 to 200 inches can be used with either a flat or a curved screen.
- Motor-powered focusing.
- Projection angle adjustable from 7 to 20 degrees.
- Incorporates a TV tuner and video cassette recorder.
- Multi-band VHF/UHF/CATV tuning.
- Equipped with an MPX and AUDIO outputs, and VIDEO and AUDIO inputs which allow connection with other video/audio equipment.
- VCR remote controllable. (FP-60)

Recording time of BII and BIII modes (FP-60)

	Cassette used				
	L-830	L-750	L-500	L-250	L-125
BII	3hr. 20min.	3hr.	2hr.	1hr.	30min.
BIII	5hr.	4hr. 30min.	3hr.	1hr. 30min.	45min.

The BII mode is recommended for higher quality of sound and picture.

1-2. SPECIFICATIONS

Optical

Projection system
1 picture tube, 1 lens, direct projection system
Picture tube — 5.25-inch high-brightness INDEX color tube, with coolant sealed
Projection lens — High-performance plastic lens F 1.0/130 mm
Projected picture size
From 30 inches to 200 inches picture measured diagonally, adjustable
Picture brightness
50 fL obtained with 55 inches screen of gain 19
Throwing distance
Approx. 1.6 m (5.3 feet) with 55 inches screen
Viewing distance
2 to 13 m (6.7 to 43 feet) with 55 inches screen

Tuner section

Television system
American TV standards
Channel coverage
VHF: 2–13
UHF: 14–69
Cable TV: 1–125

Recorder section (FP-60)

Video recording system
Rotary two-head helical scanning
Video signal — EIA standard, NTSC color
Usable cassettes
Cassettes having the mark
Tape speed — : 2.00 cm/sec.
: 1.33 cm/sec.
Maximum recording time
: 3 hours 20 min.
: 5 hours
(with Sony L-830 cassette)
Fast forward and rewind time
Under 3½ min. with Sony L-500 cassette
Video S/N — 45 dB
Audio frequency response
: 50 Hz–10,000Hz
: 50 Hz– 7,000 Hz
Audio S/N — Better than 40 dB

General

Color system — NTSC system
Test signal — Focus marker is incorporated.
Speaker — 5 × 9 cm (2 × 3⅝ inches)
Audio output — 3 W
Power requirements
120 V ac, 60 Hz
Power consumption
125 W (max.) 100 W (average) (FP-60)
115 W (max.) 90 W (average) (FP-62)
Dimensions — 230 x 288 x 670 mm (w/h/d) (FP-60)
230 x 288 x 625 mm (w/h/d) (FP-62)
(9⅛ x 11⅜ x 26½ inches)
with the panel lid closed,
incl. projecting parts
Weight — 15.5 kg (34 lbs 3 oz) (FP-60)
13.5 kg (29 lbs 12 oz) (FP-62)
Inputs — VHF/UHF 75-ohm antenna connector (F-type)
VIDEO: 1 V p-p, 75 ohms unbalanced, sync negative (phono type)
AUDIO: –10 dBs, high impedance (phono type)
MIC: –60 dBs, low impedance (minijack)
REMOTE: 8-pin DIN (FP-60)
Outputs — AUDIO: adjustable –10 dBs (MAX.), low impedance (phono type)
MPX: 77.5 mVrms (phono type)
EARPHONE: for 8-ohm earphone (minijack)
REMOTE connector (FP-60)
8-pin DIN, for connecting the RM-27 remote control unit

Optional accessories (FP-60)

Remote control unit (equipped with microphone) RM-27
Projector carrying bag VLC-60

1-3. LOCATION AND FUNCTION OF PARTS AND CONTROLS

For details on the use of each control, refer to the page indicated in brackets.

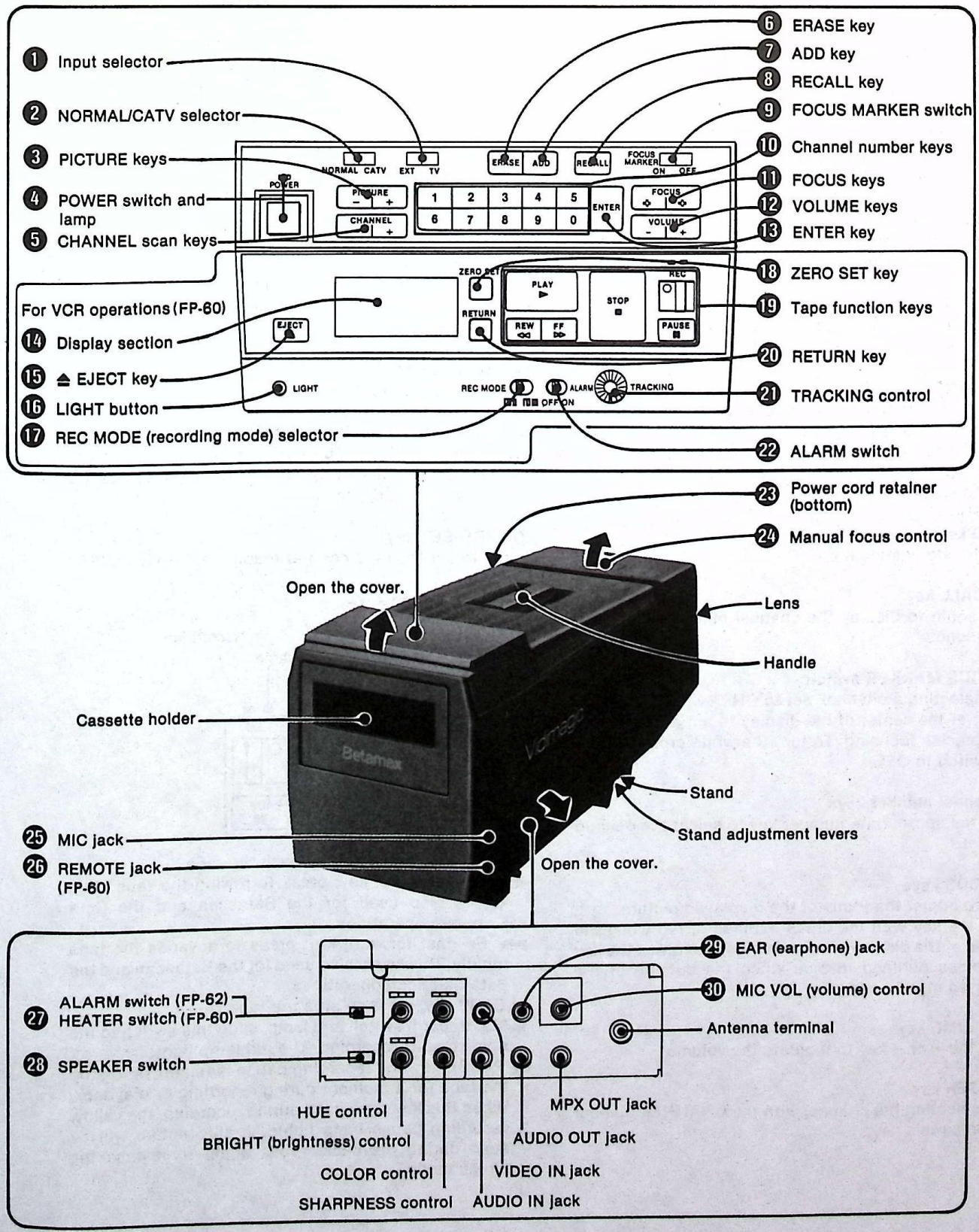

❶ Input selector
Set to TV to display the TV programs and to EXT to display the picture and listen to the sound from equipment connected to the VIDEO IN and AUDIO IN jacks. Playback picture of the VCR will be selected automatically regardless of this selector when the ▶PLAY key is pressed.

❷ NORMAL/CATV selector
Set to NORMAL to display ordinary TV programs and to CATV to display CATV programs.

❸ PICTURE keys
Press the + or – key to adjust the contrast, color intensity and brightness simultaneously in the proper ratio.

❹ POWER switch and lamp
Press to turn on the power. The lamp lights.
To turn the power off, press this switch again.

❺ CHANNEL scan keys
Press the + key to scan higher prememorized channels and the – key to scan lower channels.

❻ ERASE key
Press to erase channels.

❼ ADD key
Press to add channels.

❽ RECALL key
Press again to display the channel number only for a few seconds.

❾ FOCUS MARKER switch
After selecting a channel, set to ON. A white cross will appear at the center of the display to act as an aid for more precise focusing. To turn the white cross off, set this switch to OFF.

❿ Channel number keys
Press the appropriate number key to select the desired channel.

⓫ FOCUS keys
Used to adjust the focus of the displayed picture.
Press the key with the cross outlined in red when the outside of the displayed mark is blue, and press the key with cross outlined in blue when the outside of the displayed mark is red.

⓬ VOLUME keys
Press the + or – key to regulate the volume.

⓭ ENTER key
After selecting the channel with the CHANNEL number key, press this key.

⓮ Display section

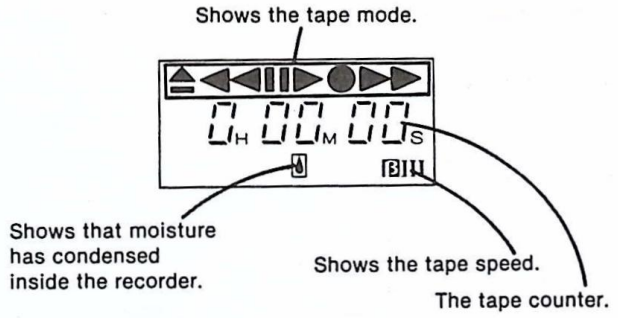

⓯ ≙ EJECT key
Press to open the cassette holder to insert or remove a cassette. This key does not function when the recorder is turned off.

⓰ LIGHT button
Press to illuminate the display section.

⓱ REC MODE (recording mode) selector
This selects the ⧈II or ⧈III recording speed. The recording time of any given cassette in the ⧈III mode is 1.5 times that in the ⧈II mode.

⓲ ZERO SET key
Press to set the time counter reading to "0H00M00S".

⓳ Tape function keys

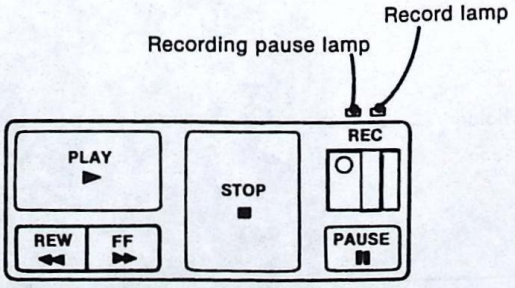

▶ PLAY key: press to play back the tape.
◀◀ REW (rewind) key: press to rewind the tape. This key is also used for the Betascan and the Beta SkipScan operations.
▶▶ FF (fast forward) key: press to advance the tape rapidly. This key is also used for the Betascan and the Beta SkipScan operations.
■ STOP key: press to stop the tape.
● REC (record) switch and lamp: slide this switch to the right to start recording. The red lamp lights.
❚❚ PAUSE key and recording pause lamp: press to stop the tape for a moment during recording or playback. When this key is pressed during recording, the yellow recording pause lamp lights. A still picture will be seen during playback. Press again to release the pause mode.

⑳ RETURN key
Press this key in the stop mode to return the tape to the "0H00M00S" point on the time counter.

㉑ TRACKING control
If streaks or snow appear during playback of a cassette recorded by another recorder, turn this control to obtain the best possible picture. The center position is the correct position for cassettes recorded by this recorder.

㉒ ALARM switch
Set this switch to the right to hear a "beep" sound each time a function key is pressed or if moisture has condensed inside the recorder.

㉓ Power cord retainer
When the set is not being used, wind the power cord around this retainer, then push it back into the unit.

㉔ Manual focus control
To adjust the focus of the displayed picture manually, turn this control clockwise or counterclockwise.
Turn this control counterclockwise when the outline of the displayed cross is blue. And turn it clockwise when the outline of the displayed cross is red.
Use this control **only** if the FOCUS keys are inoperable.

㉕ MIC jack (minijack)
Connect the microphone miniplug of the optional RM-27 remote control unit or a microphone with a miniplug here. What you say into the microphone will not be recorded by the VCR of this projector.

㉖ REMOTE jack (8-pin)
Connect the 8-pin remote control plug of the optional RM-27 remote control unit here.

㉗ HEATER switch
Normally set this switch to ON. The built-in heater will operate automatically to evaporate any condensation within 1.5 hours.
When the built-in heater is operating, neither the recorder section nor the TV tuner section functions.

㉘ SPEAKER switch
To mute the sound from the built-in speaker, set to OFF. To resume the sound, set to ON.

㉙ EAR (earphone) jack
Connect an earphone here to monitor the sound.

㉚ MIC VOL (volume) control
Turn towards MIN or MAX to regulate the microphone volume.

1-4. INSTALLATION

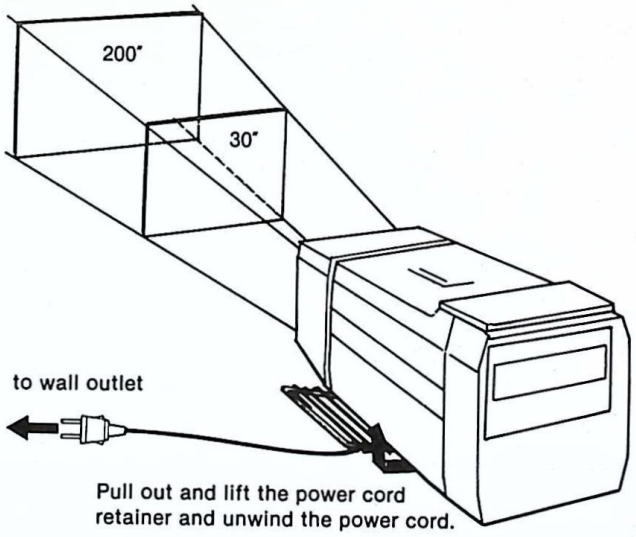

For antenna/cable connection, see page 1-14.

Screen
A Sony optional VPS-60 (55 inches), or any flat or curved screen from 30 inches to 200 inches, or a white wall or ceiling can be used.

Distance between the screen and the projector
The following table gives the approximate distance the projector should be installed away from screens of various sizes.

Projected picture size	Throwing distance	Viewing distance
30 inches	Approx. 0.9 m (3 feet)	1.5 to 8 m (5 to 26.7 feet)
55 inches	Approx. 1.6 m (5.3 feet)	2 to 13 m (6.7 to 43 feet)
100 inches	Approx. 2.9 m (9.7 feet)	4 to 25 m (13.3 to 83 feet)

Angle of the projector
The angle of the projector can be adjusted from 7 to 20 degrees by changing the height of the stand as follows.

1 While pressing the stand adjustment levers on the bottom of the projector, lift up the projector. The stand slides out.

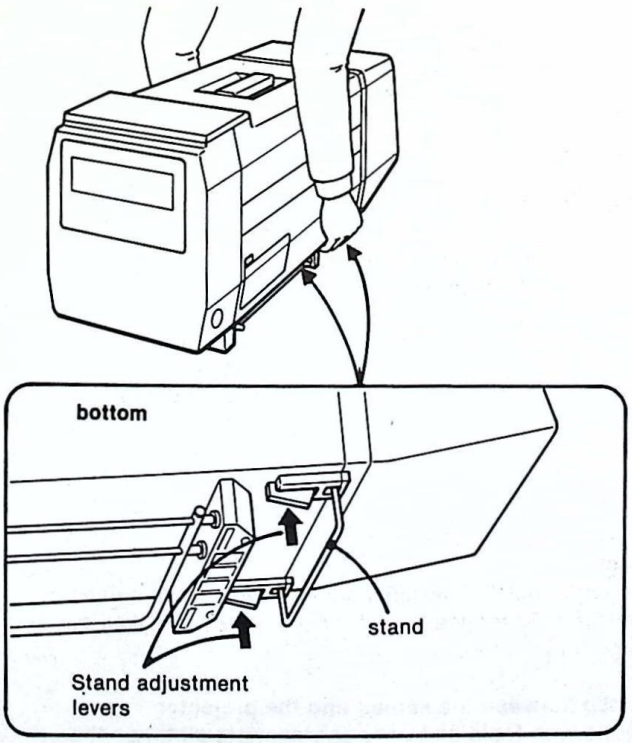

2 Release the levers after the stand has slid out to the appropriate length.

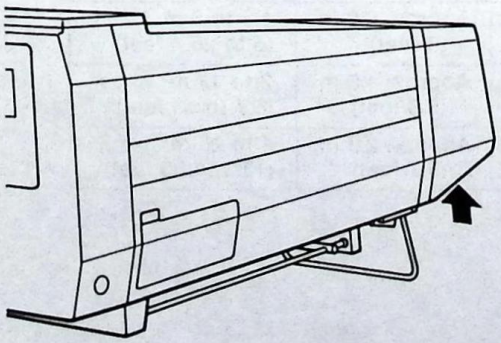

1-5. FOCUS ADJUSTMENT

Focusing can be done on the displayed picture simply by pressing the red and blue FOCUS keys. However, to focus more accurately, proceed as follows.

1 Turn on the POWER switch.
2 Display the desired picture;
To display the TV program, see page 1-7.
To display the playback picture of the VCR, see page 1-9.
To display the picture of the connected equipment, see page 1-13.
3 Set FOCUS MARKER switch to ON.
A white cross will be displayed at the center.

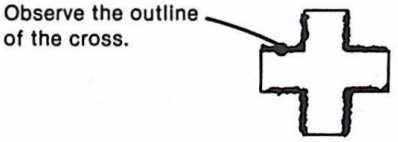

If the outline is tinged with blue, press the FOCUS key with the red cross until the blue disappears.

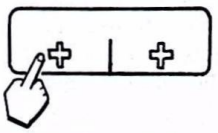

If the outline is tinged with red, press the FOCUS key with the blue cross until the red disappears.

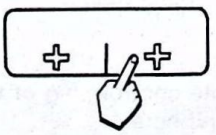

4 Set FOCUS MARKER switch to OFF.
The picture should now be in focus.

1-6. VIEWING TV PROGRAMS

This projector is capable of receiving regular VHF and UHF broadcasts plus cable TV channels listed below.

Cable TV channel chart*
Cable TV systems use letters or numbers to designate channels. To tune in a channel, refer to this chart.

Number on this TV						1	5	6	14	15	16	17
Corresponding CATV channel						A–8	A–7	A–6	A	B	C	D
18	19	20	21	22	23	24	25	26	27	28	29	30
E	F	G	H	I	J	K	L	M	N	O	P	Q
31	32	33	34	35	36	37	38	39	.....	.....	93	94
R	S	T	U	V	W	W+1	W+2	W+3	.....	.....	W+57	W+58
95	96	97	98	99	100	101	102	.....	.....	123	124	125
A–5	A–4	A–3	A–2	A–1	W+59	W+60	W+61	.....	.....	W+82	W+83	W+84

Check with your local cable TV company for more complete information on the available channels.

*The designation of the cable TV channels conforms to the EIA/NCTA recommendation standard.

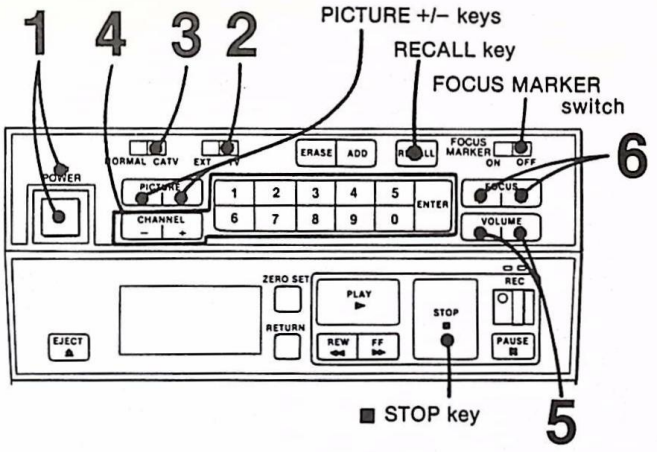

1 Turn on the POWER switch.
The lamp will light up and the channel will be displayed on the screen for a few seconds.

2 Set the Input selector to TV.

3 Depending on the channel to be viewed, set the NORMAL/CATV selector as follows:
For VHF and UHF channels, set to NORMAL.
For cable TV channels, set to CATV.

4 Select the channel in one of the following two ways.
Press the number(s) of the channel and then press ENTER key.
e.g. To select channel 6, press 6 and then the ENTER key.
To select channel 125, press 1, 2, 5 and then the ENTER key.
If you have pressed a wrong number key, wait for a few seconds until the wrong number disappears, then try again.
Press the CHANNEL + key for higher-numbered channels and the – key for lower-numbered channels. Preset channels will appear in sequence. (For details on how to preset desired channels, see page 1-11.)

5 Adjust the volume with the VOLUME + or – key.

6 If necessary, adjust the focus with the FOCUS keys.
(See page 1-6.)

To keep the channel number displayed on the screen
Press the RECALL key.

Notes
If the TV program does not appear, check the following:
- If you are playing back a tape on the VCR, stop the tape by pressing the ■ STOP key.
- The FOCUS MARKER switch should be set to OFF.
- The mark in the display section should be off. (If it is on, set the HEATER switch to OFF.) (FP-60)

1-7. IMPORTANT REMINDERS (FP-60)

NOTES ON MOISTURE CONDENSATION

If the set is brought directly from a cold to a warm location, moisture may condense on the drum assembly inside the recorder section. This may cause for the tape to adhere to the head drum. To prevent possible damage under these conditions, the set is furnished with a moisture sensor. Normally keep the HEATER switch set to ON to make the heater function automatically. If moisture is present, when the ALARM switch is set to ON, the dew caution alarm warns you of the moisture condensation first, then the mark blinks in the display section. The heater will evaporate the moisture within 1.5 hours.
When the ALARM switch is set to OFF, only the mark blinks.
The projector will not function when these indications appear. Wait until the moisture evaporates and the indication disappears. (Only, the TV tuner can be operated if the HEATER switch is set to OFF.)

TO KEEP A RECORDED PROGRAM FROM BEING ACCIDENTALLY ERASED

When a new recording is made on a previouly recorded cassette, the previous recording will be automatically erased.

To avoid erasing a recording
Break off the safety tab on the bottom of the cassette using a screwdriver or similar object.

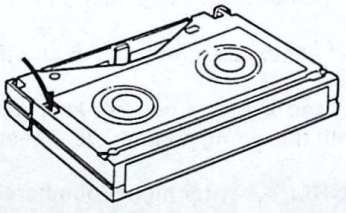

To re-record on a cassette which has had the safety tab removed
Cover the slot with a piece of plastic tape.

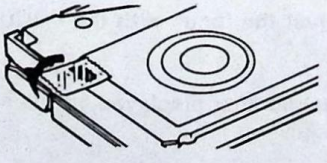

1-8. RECORDING TV PROGRAMS (FP-60)

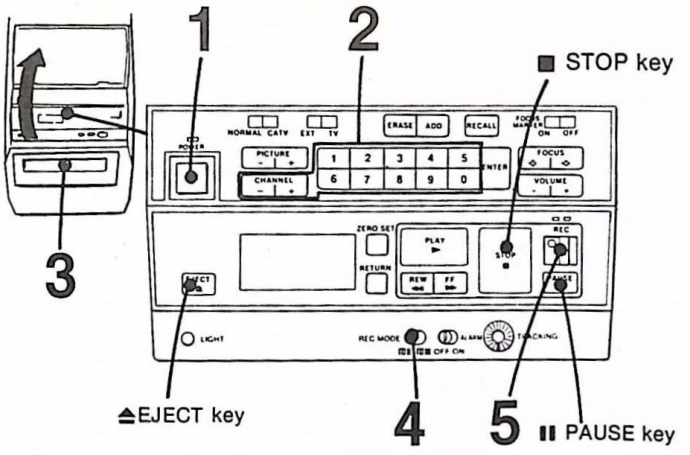

1 Turn on the power.
2 Display the TV channel to be recorded.
3 Insert a cassette.
4 Select the recording tape speed with the REC MODE selector. (See page 1-1.)

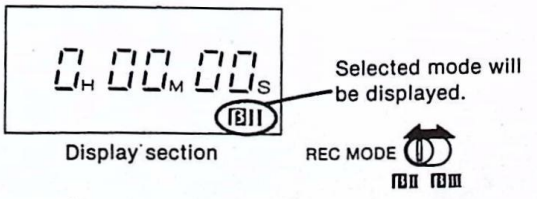

5 Slide the ● REC switch to the right.

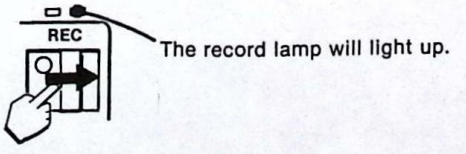

To stop recording, press the ■ STOP key.

To stop the tape momentarily, press the II PAUSE key.

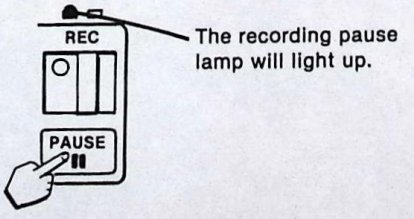

The TV program will continue to be shown on the screen but the picture will not be recorded. To resume recording, press the II PAUSE key again.
The pause mode will be automatically released after about 8 minutes to protect the video heads and the tape, and recording will resume.

1-9. VIEWING PLAYBACK (FP-60)

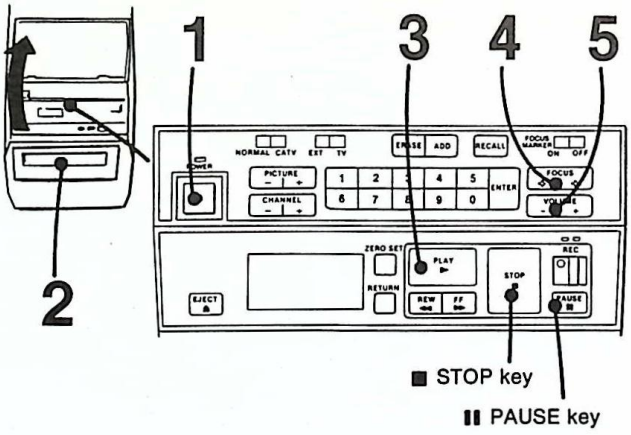

1 Press the POWER switch to turn on the power.
2 Insert a cassette with the round window to the right.
3 Press the ▶ PLAY key. Playback begins.
4 Adjust the focus with the FOCUS key. (See page 1-6.)
5 Adjust the volume with the VOLUME keys.

To stop the playback
Press the ■ STOP key.

To get a still picture
During playback, press the ❚❚ PAUSE key.
There will be no audio with a still picture. Streaks will appear in the still picture.

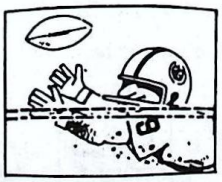

To resume playback, press the ❚❚ PAUSE key again.

When a tape recorded on another recorder is played back
If streaks or snow appear during playback, turn the TRACKING control to obtain the best possible picture. Return the control to the center position after playing back the tape.

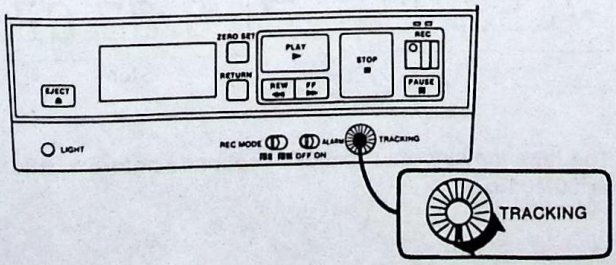

Notes
If no playback picture appears, check the following:
- The FOCUS MARKER switch should be set to OFF.
- The mark in the display section should be off. (If it is on, see page 1-8.)

1-10. TO LOCATE A PARTICULAR POINT ON THE VIDEO TAPE (FP-60)

TO VISUALLY SEARCH FOR A PARTICULAR POINT DURING PLAYBACK

BETASCAN

Press the ▶▶ FF or ◀◀ REW key during playback. While the key is pressed, a high-speed playback picture in the forward or reverse direction can be seen. Release the key for normal playback.

For a high-speed playback picture in the forward direction
During playback, press the ▶▶ FF key.

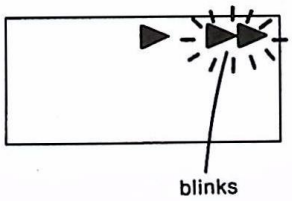

For a high-speed playback picture in the reverse direction
During playback, press the ◀◀ REW key.

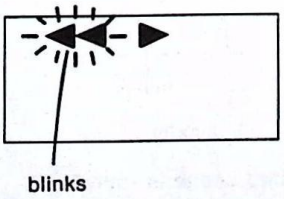

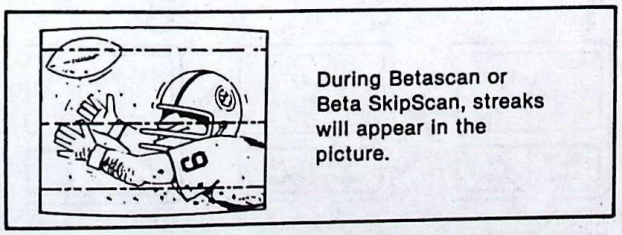

TO VIEW THE PICTURE DURING FAST FORWARD OR REWIND

BETA SKIPSCAN

Press the ▶▶ FF key or ◀◀ REW key during fast-forward or rewind. While the key is pressed, a high-speed playback picture in the forward or reverse direction can be seen.
Release the key for normal rewind or fast forward.

For high-speed playback picture during fast forward tape advancement
During fast forward, press the ▶▶ FF key again.

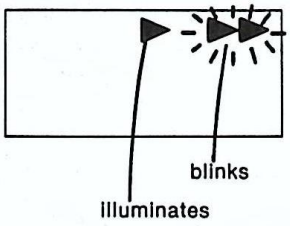

For high-speed playback picture during rewind
During rewind, press the ◀◀ REW key again.

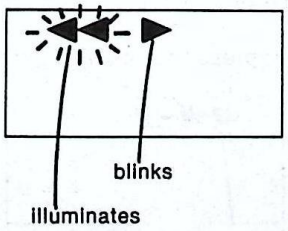

When the desired scene is found

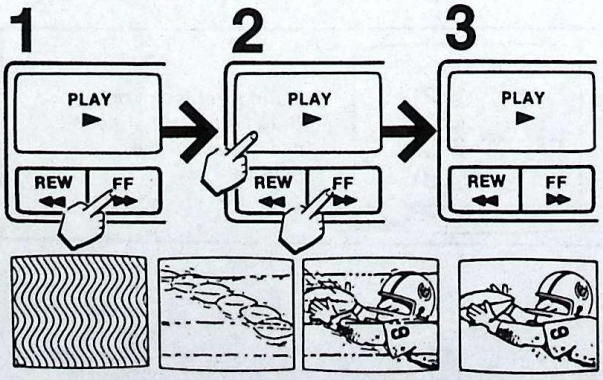

1 While the ▶▶ FF or ◀◀ REW key is kept pressed,
2 Press the ▶ PLAY key. Keep the ▶ PLAY key pressed, and
3 Release the ▶▶ FF or ◀◀ REW key. Then lift your finger from the ▶ PLAY key.
You can see the normal playback picture.

TO INDEX THE WHOLE TAPE

Press the ZERO SET key to set the counter to "0H00M00S" before recording or playback. By noting the counter reading at a particular point, you can easily find that point later by referring to the time counter.



Write the counter reading you want to remember on the label of the cassette.

The time counter does not operate with brand-new tapes.
The time counter counts the CTL signals which are generated and recorded at the same time the video signals are recorded. Because brand-new tapes have no CTL signals recorded on them, the time counter cannot operate.

TO RETURN TO A PRE-REGISTERED POINT

During recording or playback, press the ZERO SET key at the point you later want to locate. The counter shows "0H00M00S". When the recording or playback is finished, stop the tape by pressing the ■ STOP key, then press the RETURN key. The tape will rewind or advance to the point where the ZERO SET key was pressed.

The tape is rewound.

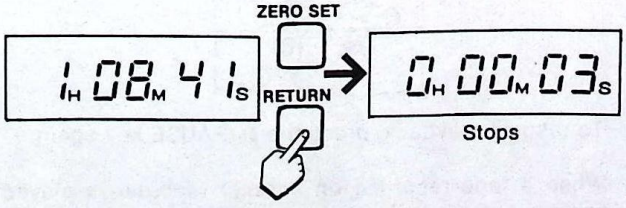

When the counter reading has a minus sign
The tape is advanced.

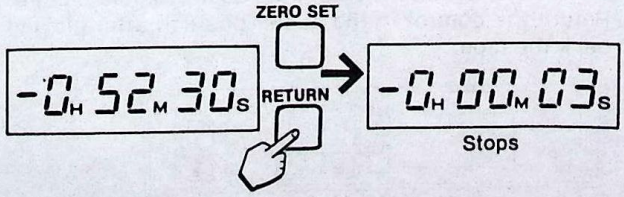

The tape may stop a number of seconds before or after 0H00M00S.

1-11. PICTURE ADJUSTMENTS

The PICTURE +/– keys adjust the contrast, color intensity and brightness simultaneouly in the proper ratio.

Press the + key to increase picture contrast
or
the – key to decrease it.

INDIVIDUAL ADJUSTMENTS

Individual adjustments can be made as follows although satisfactory results will usually be obtained with the presettings made at the factory. (Controls are inside the front panel.)

skin tones become purplish — HUE — skin tones become greenish

for less color intensity — COLOR — for more color intensity

for less brightness — BRIGHT — for more brightness

for less sharpness — SHARPNESS — for more sharpness

1-12. PRESETTING CHANNELS

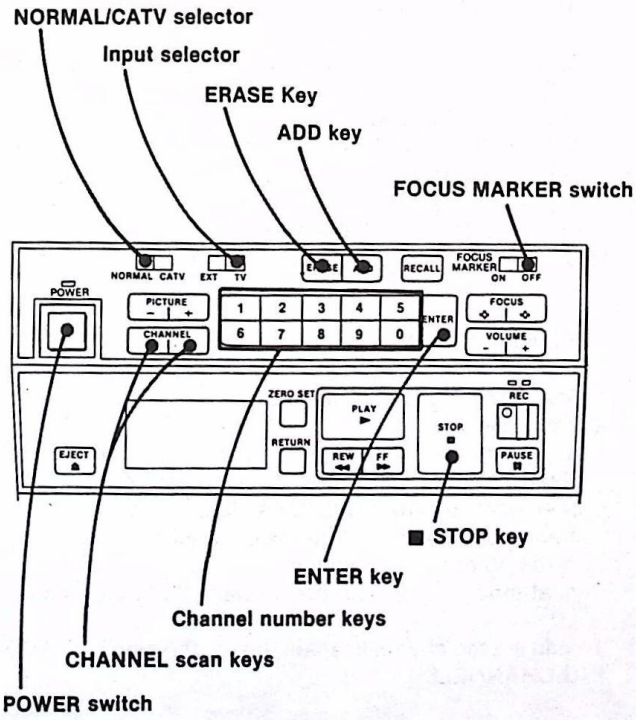

Receivable channels of your set are:
VHF: 2–13
UHF: 14–69
CATV: 1–125
By adding and erasing channels, you can preset your projector so that only the desired channels appear in sequence when the CHANNEL scan +/– key is pressed.

Preparation
1 **Turn on the POWER switch.**
2 **Set the Input selector to TV.**
3 **Depending on the channel to be added or erased, set the NORMAL/CATV selector as follows:**
For VHF and UHF channels, set to NORMAL.
For cable TV channels, set to CATV.

ADDING CHANNELS

1 **Select the channel to be added by pressing the channel number keys and then ENTER key.**
2 **Press the ADD key.**
A "+" indication will appear on the left of the channel display on the screen, indicating that the channel will appear in the proper numerical sequence when you press the CHANNEL scan +/– key.

Repeat steps **1** and **2** for other channels to be added.

ERASING CHANNELS

1 **Select the channel to be erased.**
2 **Press ERASE.**
A "–" indication will appear on the left of the channel display on the screen, indicating that the channel has been erased. When the CHANNEL scan +/– key is pressed, you will see that the channel is skipped over in the numerical sequence.

Repeat steps **1** and **2** for other channels to be erased.

To add erased channels again, follow the steps in "ADDING CHANNELS".

Note
You cannot erase a VHF or UHF channel from the memory and retain a cable TV channel which has the same number, or vice versa. If either a VHF/UHF channel or a cable TV channel with the same number is to be kept in the memory, do not erase the number.

1-13. USE OF THE OPTIONAL REMOTE CONTROL UNIT (FP-60)

The optional Sony RM-27 remote control unit will not only enable you to operate the VCR of this unit at a distance as a remote control unit but can also function as a microphone for additional demonstrating narration.

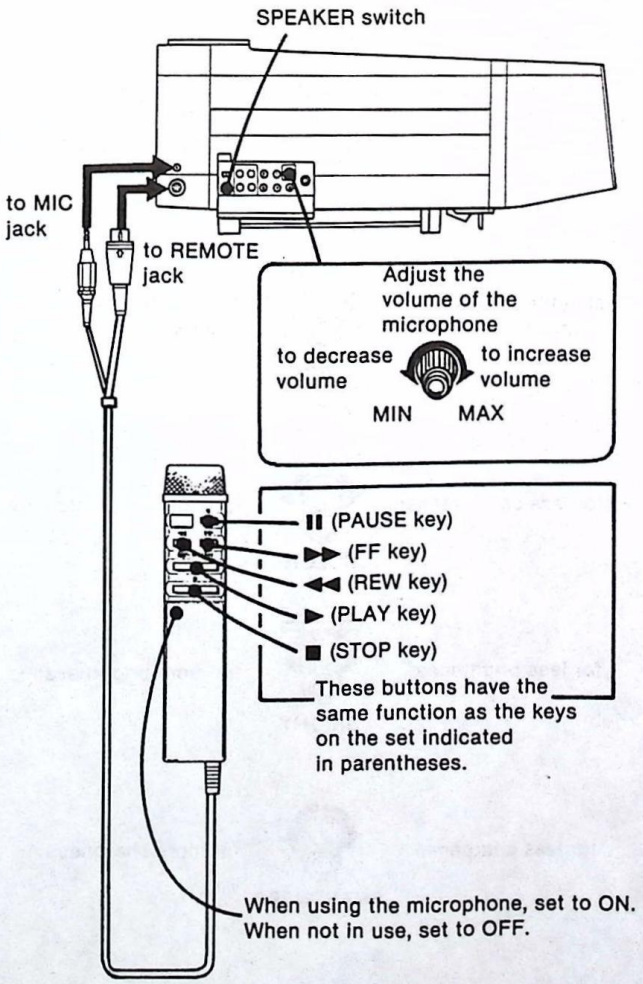

Use of the SPEAKER switch
To have only the sound from the microphone be heard, set to OFF. To mix the sound from the microphone with the sound of the TV, VCR or the connected audio/video source, set to ON.

Notes
- What you say into the microphone will not be recorded by the VCR of the projector.
- If the microphone is placed too near the speakers, a howling effect (acoustic feedback) may occur. If this happens, change the direction of the microphone until the howling stops, or decrease the volume of the microphone.

1-14. CONNECTING VIDEO/AUDIO EQUIPMENT

To display the signals from a videodisc player or another video cassette recorder

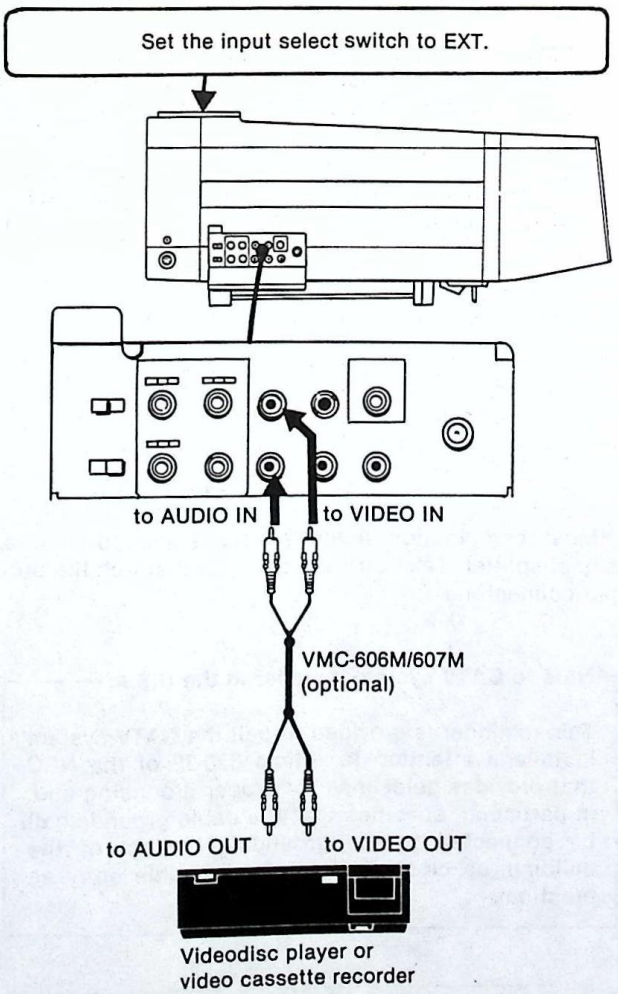

To record the displayed programs, insert a cassette in the cassette holder of the projector and slide the ● REC switch to the right.

To listen to the sound from another speaker system

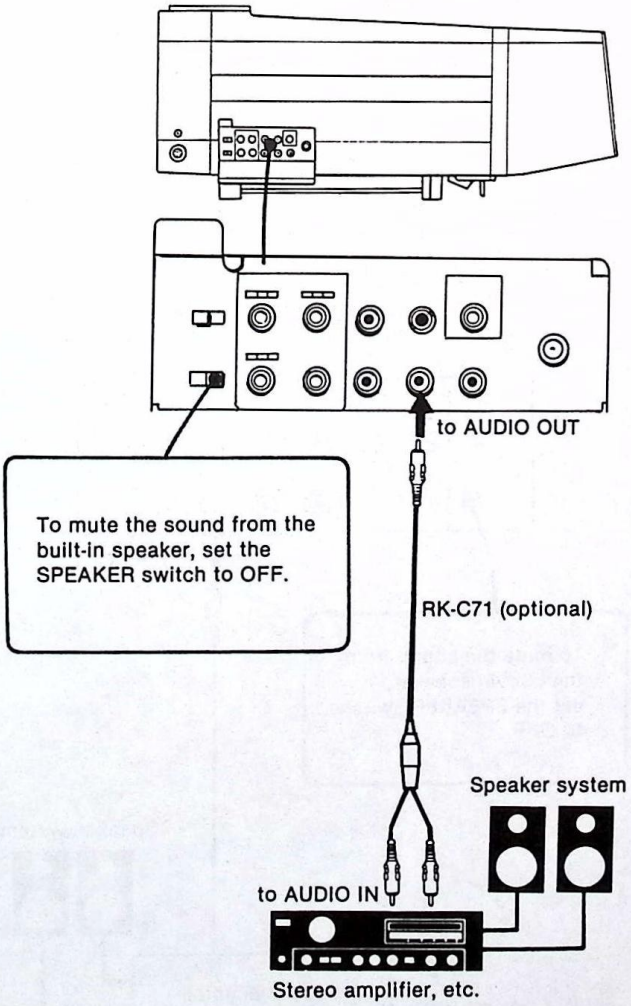

The volume of the sound from the AUDIO OUT jack is adjustable. If the connected equipment does not have a volume control, adjust the volume of the speaker system with the VOLUME keys of this set. If the connected equipment has a volume control, proceed as follows.

1 Set the volume of the connected equipment to the minimum.
2 Press the VOLUME + key to increase the volume to the maximum.
3 Set the volume of the connected equipment to get the maximum volume which you care to listen to.
4 Adjust the volume with the VOLUME + or – key of this set.

To connect a special adaptor for future multichannel TV sound (stereo or bilingual) broadcasts.

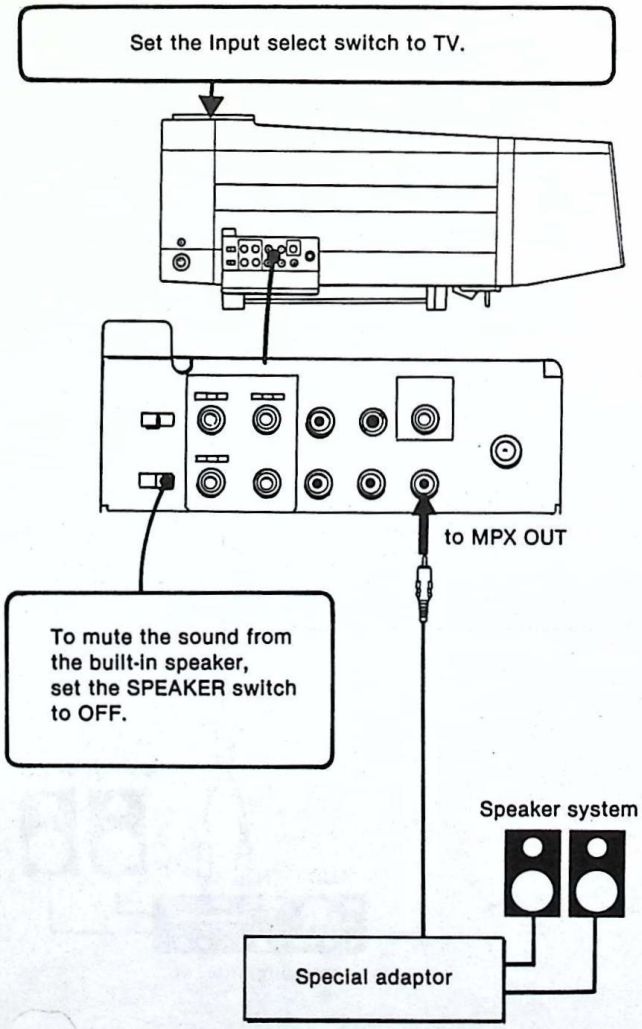

1-15. ANTENNA/CABLE CONNECTION

To receive TV broadcasts with this projector, you will need to connect a TV antenna or, if Cable TV is to be received, a cable supplied by your local cable operator.

Prepare the antenna or cable end using the appropriate connector, and connect the antenna or cable to the antenna terminal of the projector. (See A or B below.)

A **Combination VHF/UHF antenna,* VHF antenna, UHF antenna or CATV cable**

Connect a 75-ohm coaxial type (round) cable

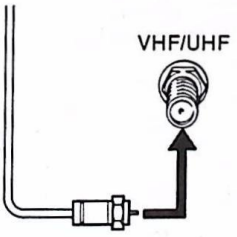

*Most combination antennas are equipped with a signal splitter. Take off the splitter and attach the proper connector.

Note to CATV system installer in the U.S.A:

This reminder is provided to call the CATV system installer's attention to Article 820-22 of the NEC that provides guidelines for proper grounding and, in particular, specifies that the cable ground shall be connected to the grounding system of the building, as close to the point of cable entry as practical.

B **When both VHF and UHF antennas are connected**

Prepare the VHF antenna end using the appropriate connector as illustrated in A.
Attach an optional EAC-66 U/V mixer to the projector antenna terminal, and connect the cables to the U/V mixer.

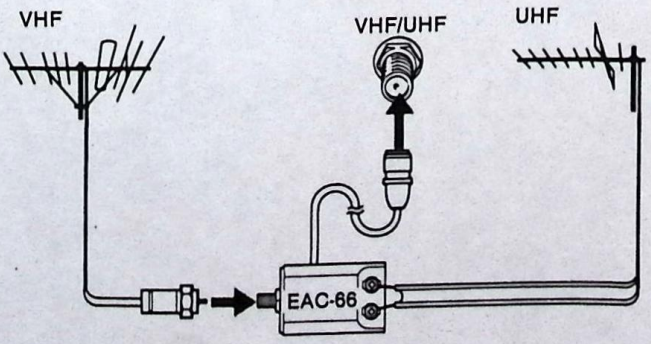

When the cable is connected to the projector with the U/V mixer, snow and noise may appear in the pictures of the cable TV channels over 37 (W + 1).

1-16. QUICK REFERENCE-A (Projector)

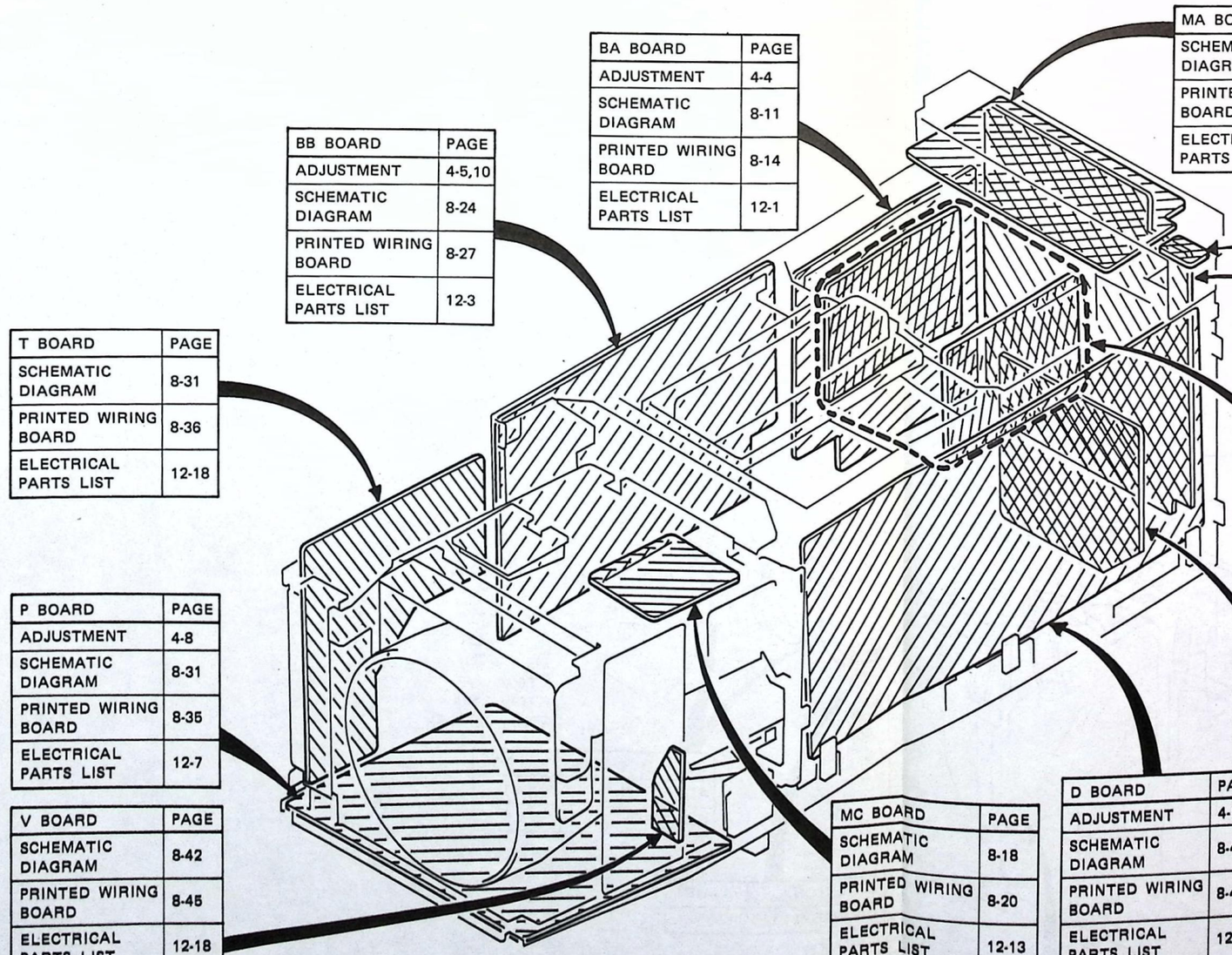

BA BOARD	PAGE
ADJUSTMENT	4-4
SCHEMATIC DIAGRAM	8-11
PRINTED WIRING BOARD	8-14
ELECTRICAL PARTS LIST	12-1

BB BOARD	PAGE
ADJUSTMENT	4-5,10
SCHEMATIC DIAGRAM	8-24
PRINTED WIRING BOARD	8-27
ELECTRICAL PARTS LIST	12-3

T BOARD	PAGE
SCHEMATIC DIAGRAM	8-31
PRINTED WIRING BOARD	8-36
ELECTRICAL PARTS LIST	12-18

P BOARD	PAGE
ADJUSTMENT	4-8
SCHEMATIC DIAGRAM	8-31
PRINTED WIRING BOARD	8-35
ELECTRICAL PARTS LIST	12-7

V BOARD	PAGE
SCHEMATIC DIAGRAM	8-42
PRINTED WIRING BOARD	8-45
ELECTRICAL PARTS LIST	12-18

MA BOARD	PAGE
SCHEMATIC DIAGRAM	8-18
PRINTED WIRING BOARD	8-20
ELECTRICAL PARTS LIST	12-13

MB BOARD	PAGE
SCHEMATIC DIAGRAM	8-18
PRINTED WIRING BOARD	8-20
ELECTRICAL PARTS LIST	12-13

A BOARD	PAGE
ADJUSTMENT	4-3
SCHEMATIC DIAGRAM	8-15
PRINTED WIRING BOARD	8-20
ELECTRICAL PARTS LIST	12-10

POWER BLOCK ASS'Y	PAGE
ADJUSTMENT	4-9
SCHEMATIC DIAGRAM	8-39
PRINTED WIRING BOARD	8-45
ELECTRICAL PARTS LIST	12-10

MC BOARD	PAGE
SCHEMATIC DIAGRAM	8-18
PRINTED WIRING BOARD	8-20
ELECTRICAL PARTS LIST	12-13

D BOARD	PAGE
ADJUSTMENT	4-8
SCHEMATIC DIAGRAM	8-40
PRINTED WIRING BOARD	8-43
ELECTRICAL PARTS LIST	12-15

C BOARD	PAGE
ADJUSTMENT	4-9
SCHEMATIC DIAGRAM	8-26
PRINTED WIRING BOARD	8-29
ELECTRICAL PARTS LIST	12-14

1-17. QUICK REFERENCE-B (Projector)

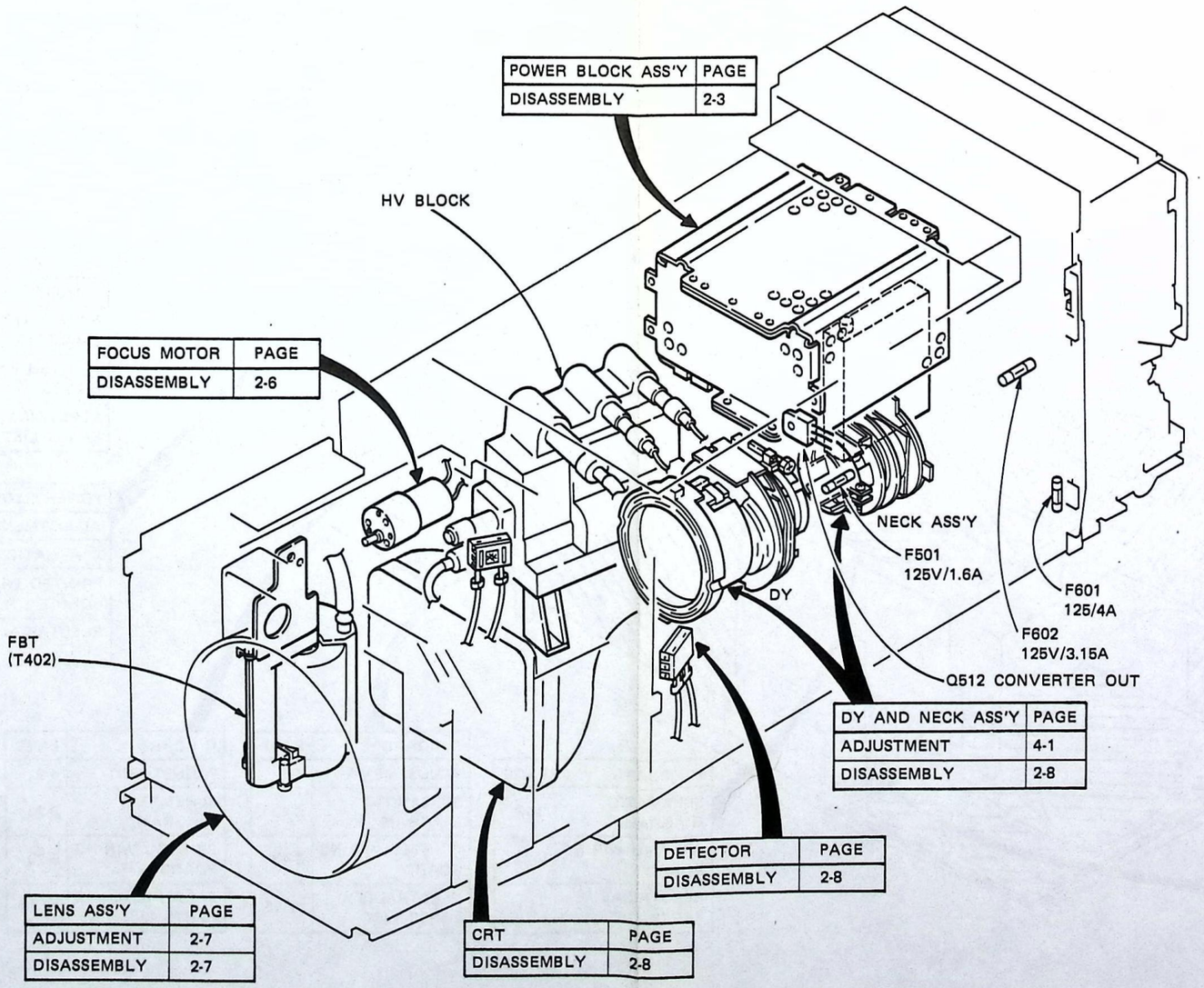

1-18. QUICK REFERENCE-C (VIDEO: FP-60)

OM-1 BOARD	PAGE
SCHEMATIC DIAGRAM	9-100
PRINTED WIRING BOARD	9-100
ELECTRICAL PARTS LIST	13-8

PC-5 BOARD	PAGE
SCHEMATIC DIAGRAM	9-173
PRINTED WIRING BOARD	9-172
ELECTRICAL PARTS LIST	13-21

LU-1 BOARD	PAGE
SCHEMATIC DIAGRAM	9-73
PRINTED WIRING BOARD	9-70
ELECTRICAL PARTS LIST	13-22

SD-1 BOARD	PAGE
SCHEMATIC DIAGRAM	9-147
PRINTED WIRING BOARD	9-145
ELECTRICAL PARTS LIST	13-20

VB-1 BOARD	PAGE
SCHEMATIC DIAGRAM	9-107
PRINTED WIRING BOARD	9-106
ELECTRICAL PARTS LIST	13-15

MC-1 BOARD	PAGE
ADJUSTMENT	5-41
SCHEMATIC DIAGRAM	9-83
PRINTED WIRING BOARD	9-78
ELECTRICAL PARTS LIST	13-3

JG-1 BOARD	PAGE
SCHEMATIC DIAGRAM	9-103
PRINTED WIRING BOARD	9-101
ELECTRICAL PARTS LIST	13-15

AD-9 BOARD	PAGE
SCHEMATIC DIAGRAM	9-133
PRINTED WIRING BOARD	9-131
ELECTRICAL PARTS LIST	13-22

CM-4 BOARD	PAGE
SCHEMATIC DIAGRAM	9-129
PRINTED WIRING BOARD	9-127
ELECTRICAL PARTS LIST	13-14

RP-11 BOARD	PAGE
ADJUSTMENT	5-36
SCHEMATIC DIAGRAM	9-121
PRINTED WIRING BOARD	9-119
ELECTRICAL PARTS LIST	13-4

DF-2 BOARD	PAGE
SCHEMATIC DIAGRAM	9-126
PRINTED WIRING BOARD	9-123
ELECTRICAL PARTS LIST	13-13

MA-6 BOARD	PAGE
ADJUSTMENT	5-31, 33
SCHEMATIC DIAGRAM	9-73
PRINTED WIRING BOARD	9-70
ELECTRICAL PARTS LIST	13-1

YM-1 BOARD	PAGE
SCHEMATIC DIAGRAM	9-97
PRINTED WIRING BOARD	9-95
ELECTRICAL PARTS LIST	13-11

SV-11 BOARD	PAGE
SCHEMATIC DIAGRAM	9-137
PRINTED WIRING BOARD	9-135
ELECTRICAL PARTS LIST	13-18

FD-3 BOARD	PAGE
SCHEMATIC DIAGRAM	9-89
PRINTED WIRING BOARD	9-86
ELECTRICAL PARTS LIST	13-6

SP-1 BOARD	PAGE
SCHEMATIC DIAGRAM	9-143
PRINTED WIRING BOARD	9-141
ELECTRICAL PARTS LIST	13-20

YS-1 BOARD	PAGE
SCHEMATIC DIAGRAM	9-109
PRINTED WIRING BOARD	9-108
ELECTRICAL PARTS LIST	13-11

RS-1 BOARD	PAGE
SCHEMATIC DIAGRAM	9-163
PRINTED WIRING BOARD	9-161
ELECTRICAL PARTS LIST	

YF-1 BOARD	PAGE
SCHEMATIC DIAGRAM	9-117
PRINTED WIRING BOARD	9-115
ELECTRICAL PARTS LIST	13-9

PE-3 BOARD	PAGE
SCHEMATIC DIAGRAM	9-113
PRINTED WIRING BOARD	9-111
ELECTRICAL PARTS LIST	13-13

RM-9 BOARD	PAGE
SCHEMATIC DIAGRAM	9-151
PRINTED WIRING BOARD	9-149
ELECTRICAL PARTS LIST	13-16

1-19. QUICK REFERENCE-D (VIDEO: FP-60)

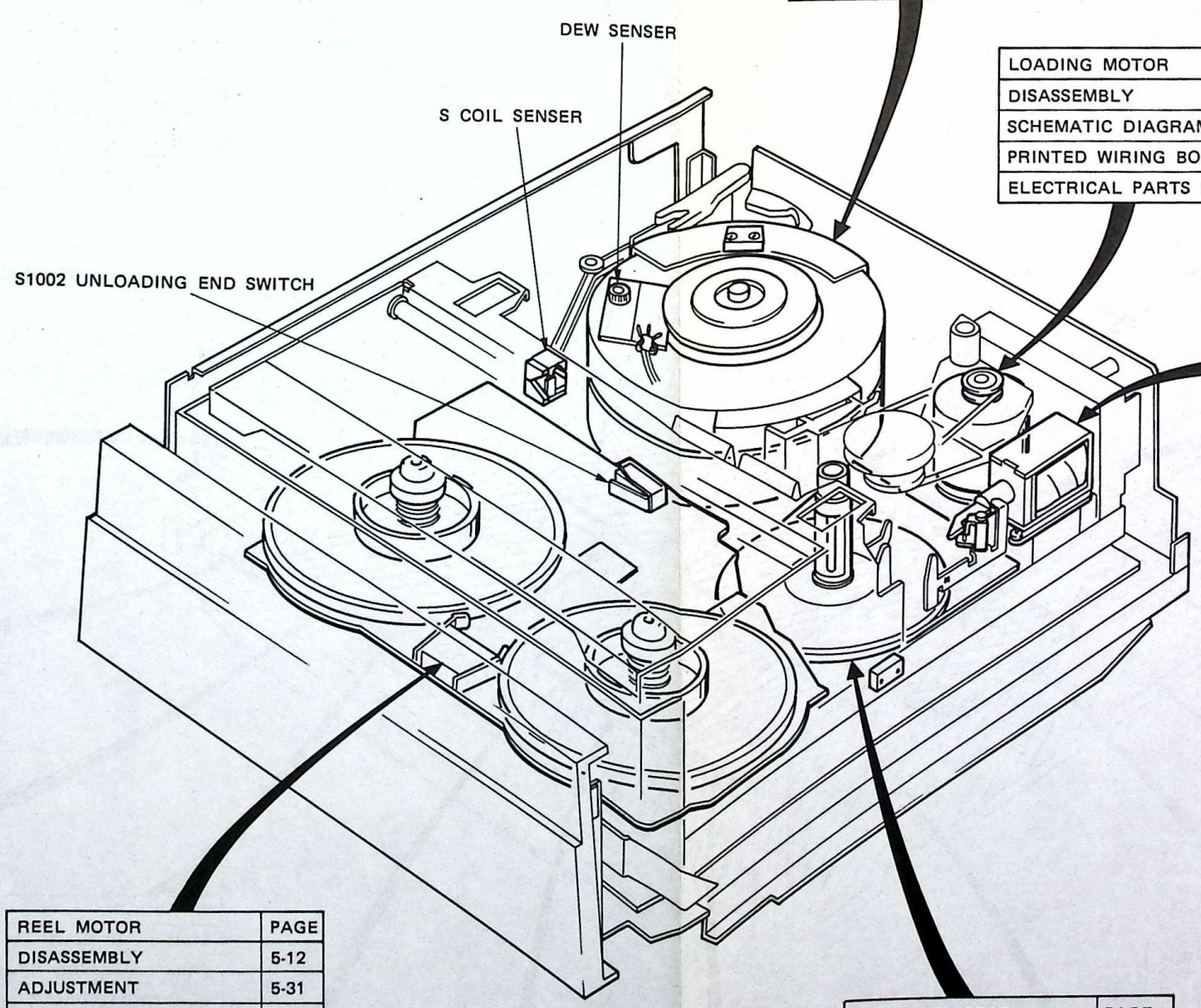

DRUM MOTOR	PAGE
DISASSEMBLY	5-8
ADJUSTMENT	5-9, 31

LOADING MOTOR	PAGE
DISASSEMBLY	5-13
SCHEMATIC DIAGRAM	9-170
PRINTED WIRING BOARD	9-167
ELECTRICAL PARTS LIST	

PINCH ROLLER SOLENOID	PAGE
ADJUSTMENT	5-17

REEL MOTOR	PAGE
DISASSEMBLY	5-12
ADJUSTMENT	5-31
SCHEMATIC DIAGRAM	9-159
PRINTED WIRING BOARD	9-157
ELECTRICAL PARTS LIST	

CAPSTAN MOTOR	PAGE
DISASSEMBLY	5-10
ADJUSTMENT	5-27, 33
SCHEMATIC DIAGRAM	9-155
PRINTED WIRING BOARD	9-153
ELECTRICAL PARTS LIST	

SECTION 2
DISASSEMBLY AND REPLACEMENT
(Projector:FP-60/62)

TABLE OF CONTENTS

Section	*Title*	*Page*
2.	**DISASSEMBLY AND REPLACEMENT**	
2-1.	Cabinet (Lower) Removal	2-1
2-2.	Cabinet Assy (Upper) Removal	2-2
2-3.	VTR Removal (FP-60 only)	2-2
2-4.	Control Panel Removal	2-3
2-5.	Power Block Removal	2-3
2-6.	Handle Block Assy Removal	2-4
2-7.	Handle Assy Attaching	2-4
2-8.	MC Board Removal	2-5
2-9.	Lens Block Assy Removal	2-5
2-10.	Focus Motor Removal	2-6
2-11.	Arm (A) Driving Removal	2-6
2-12.	Lens Position Adjustment	2-7
2-13.	Lens Removal	2-7
2-14.	PICTURE TUBE Removal	2-8
2-15.	Checking for A and D Boards Up	2-8
2-16.	Checking for BA and BB Boards	2-9
2-17.	Checking for P Board	2-9

PJ DISASSEMBLY AND REPLACEMENT

SECTION 2
DISASSEMBLY AND REPLACEMENT

Note: Follow the disassembly procedure in the numerical order given.

2-1. CABINET (LOWER) REMOVAL

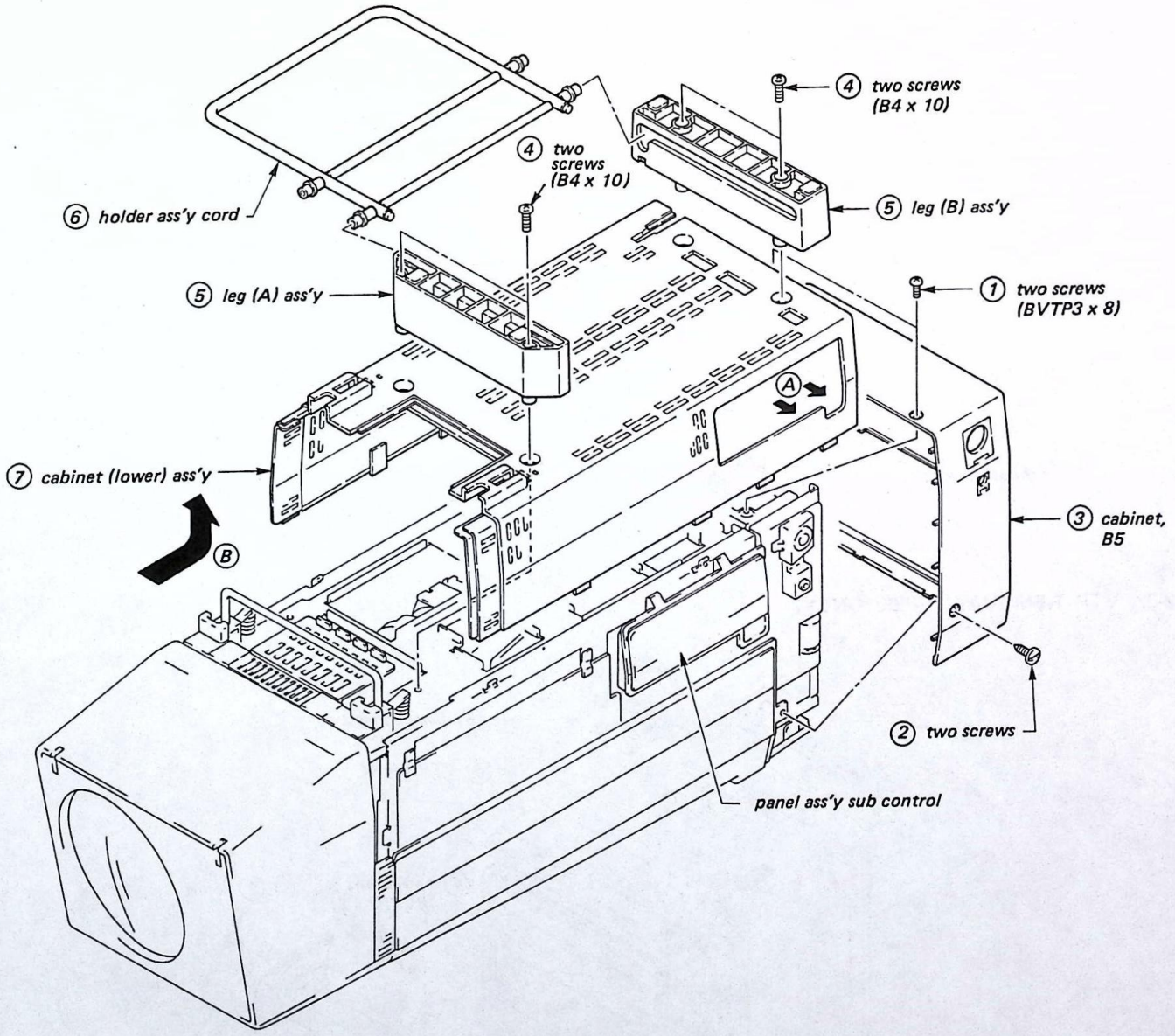

2-2. CABINET ASSY (UPPER) REMOVAL

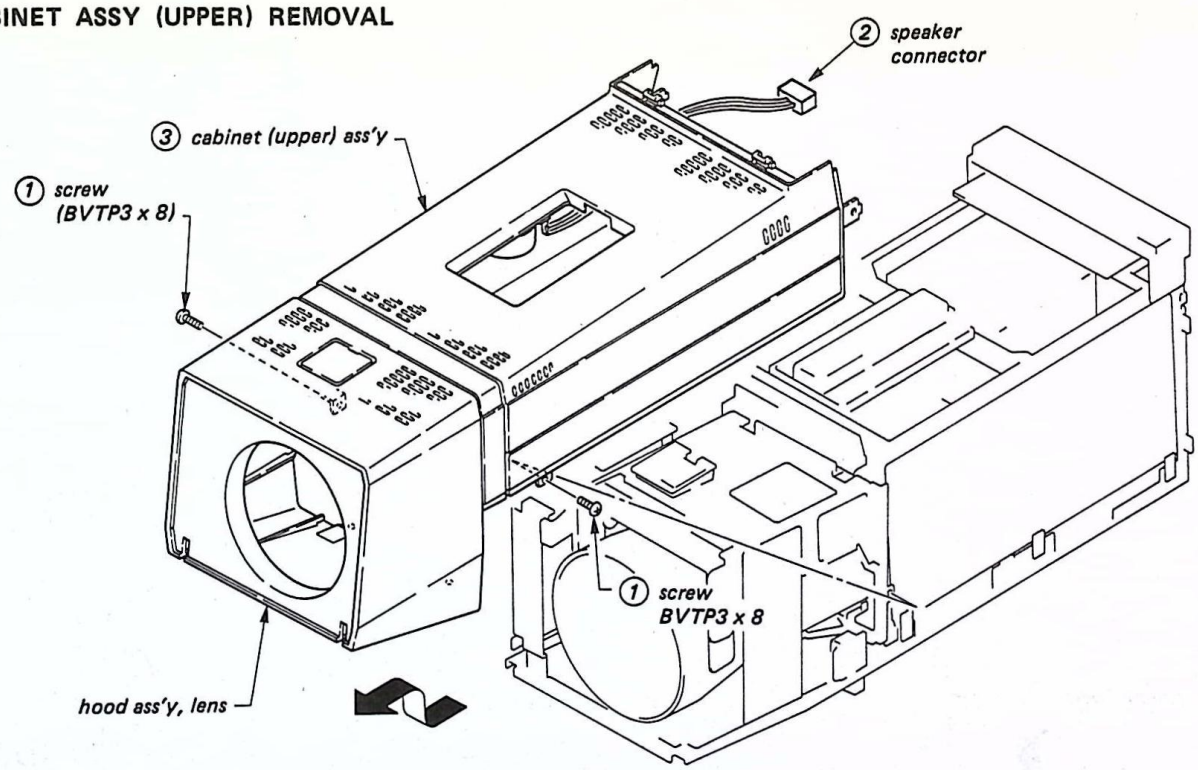

2-3. VTR REMOVAL (FP-60 ONLY)

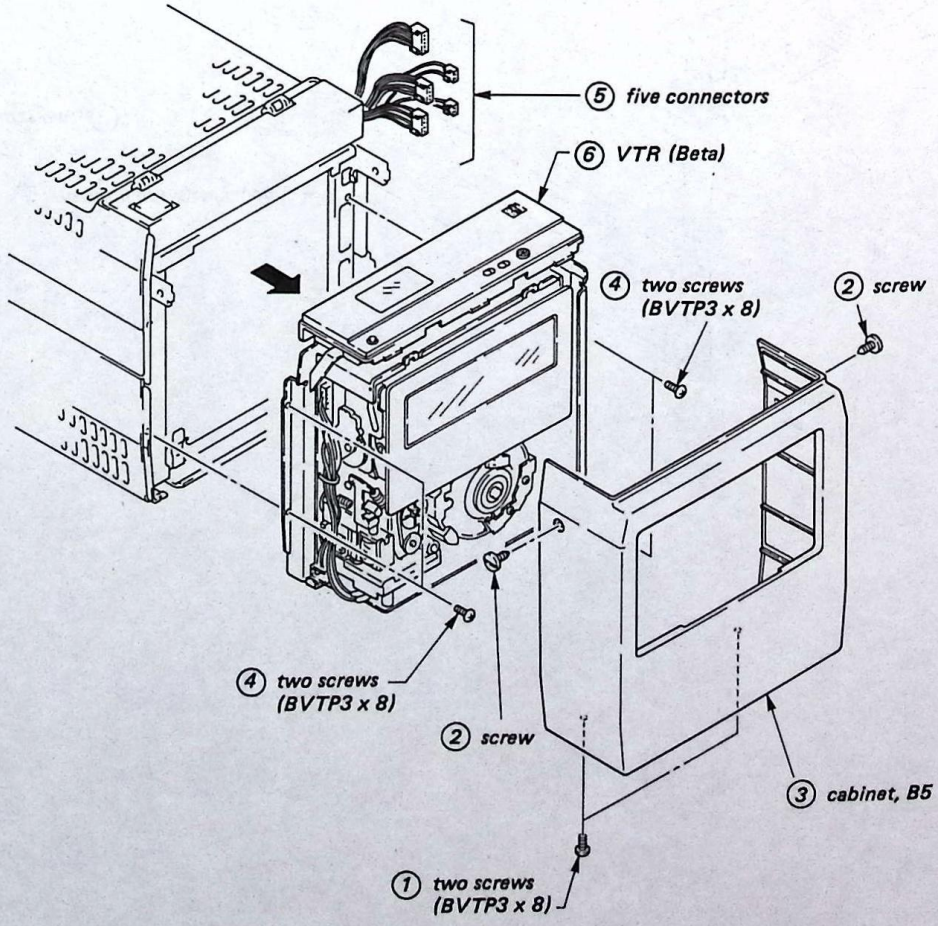

2-4. CONTROL PANEL REMOVAL

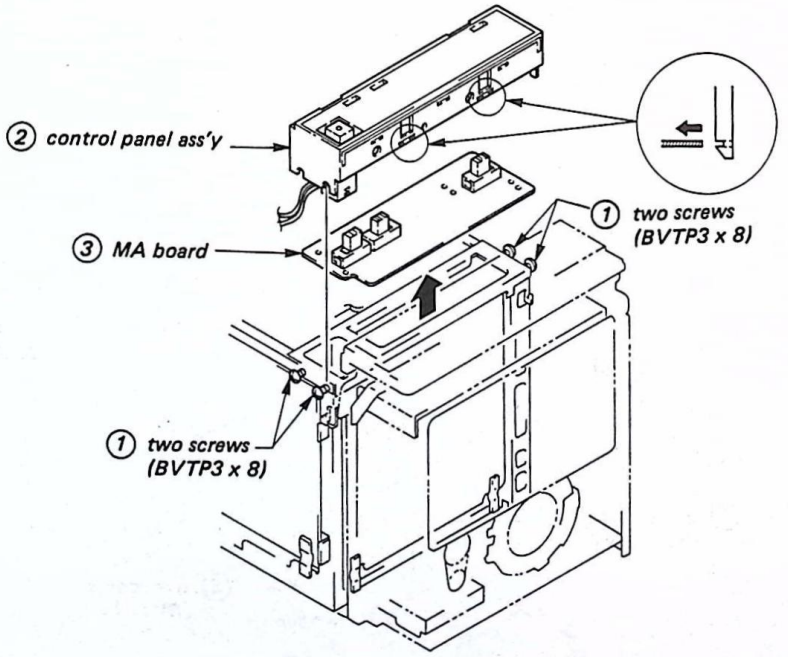

2-5. POWER BLOCK REMOVAL

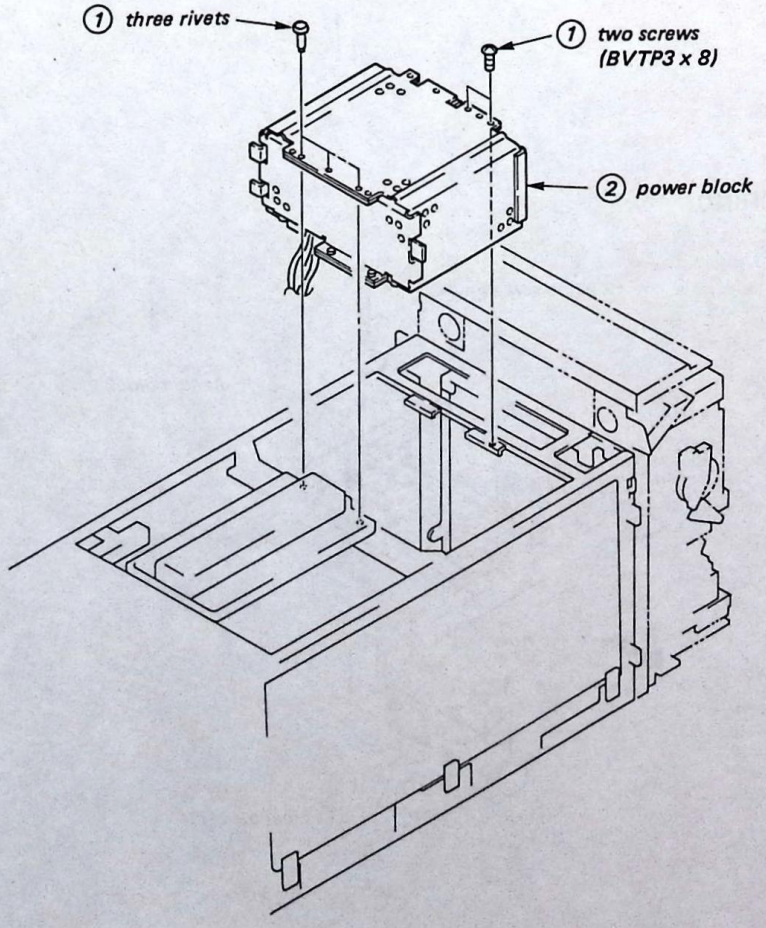

2-6. HANDLE BLOCK ASSY REMOVAL

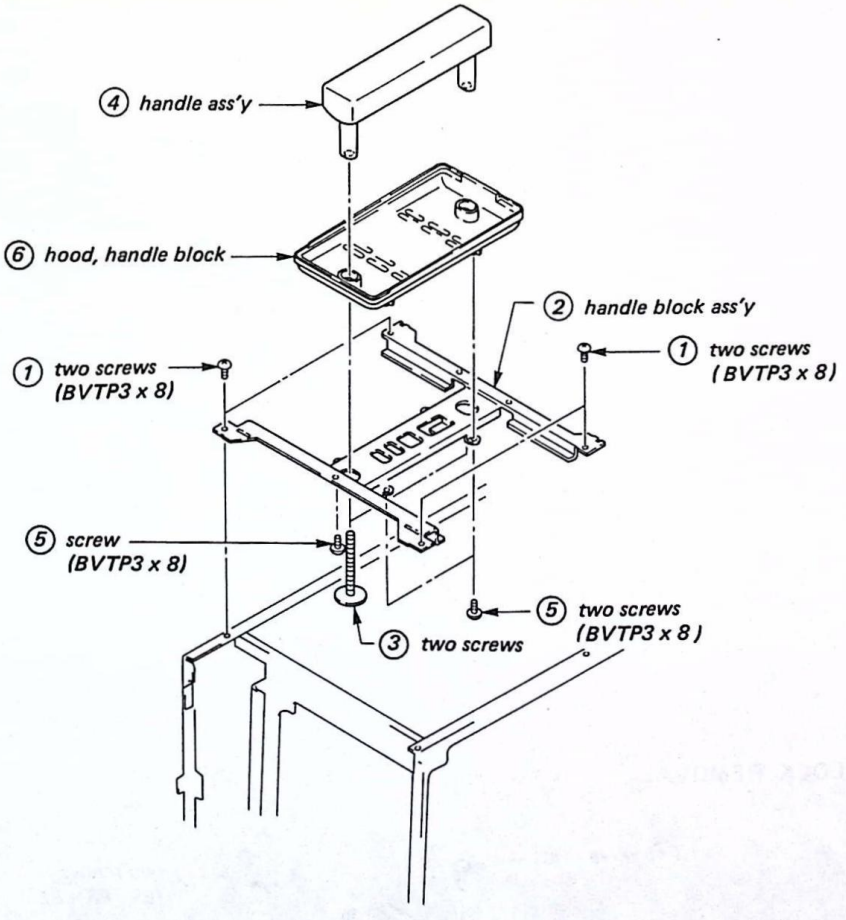

2-7. HANDLE ASSY ATTACHING

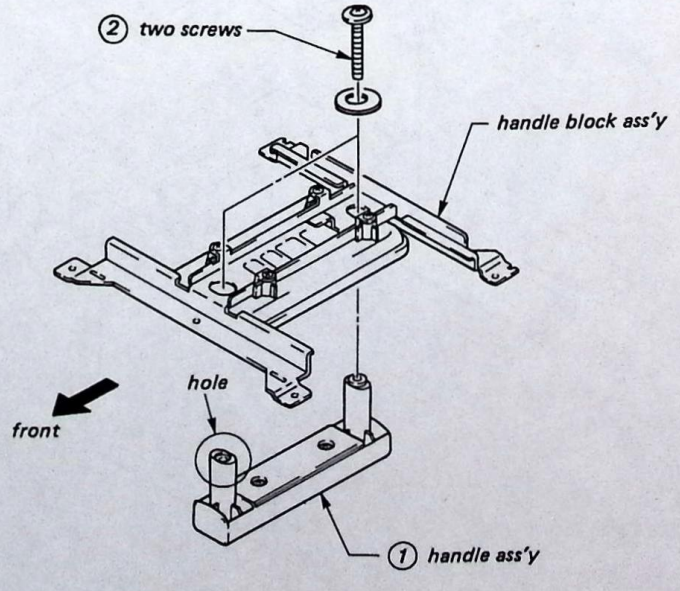

2-8. MC BOARD REMOVAL

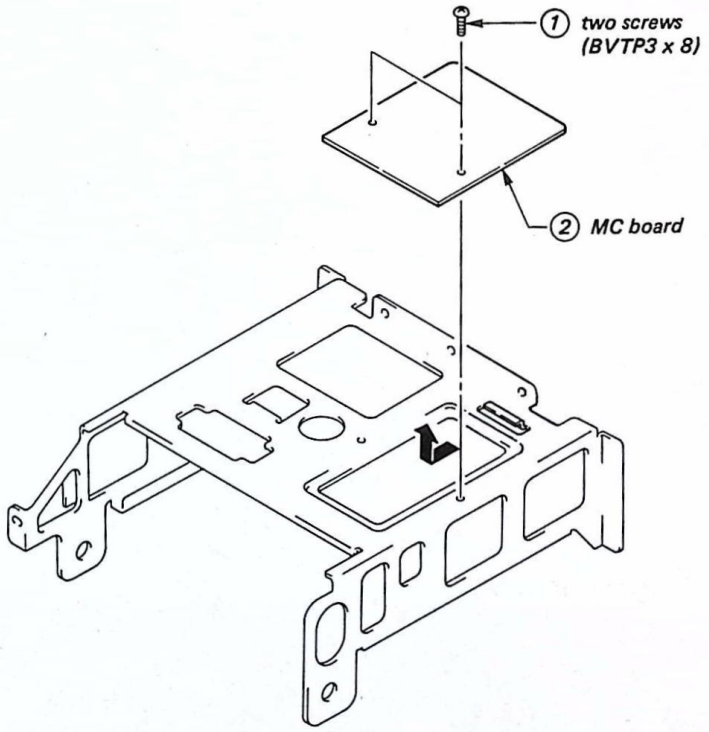

2-9. LENS BLOCK ASSY REMOVAL

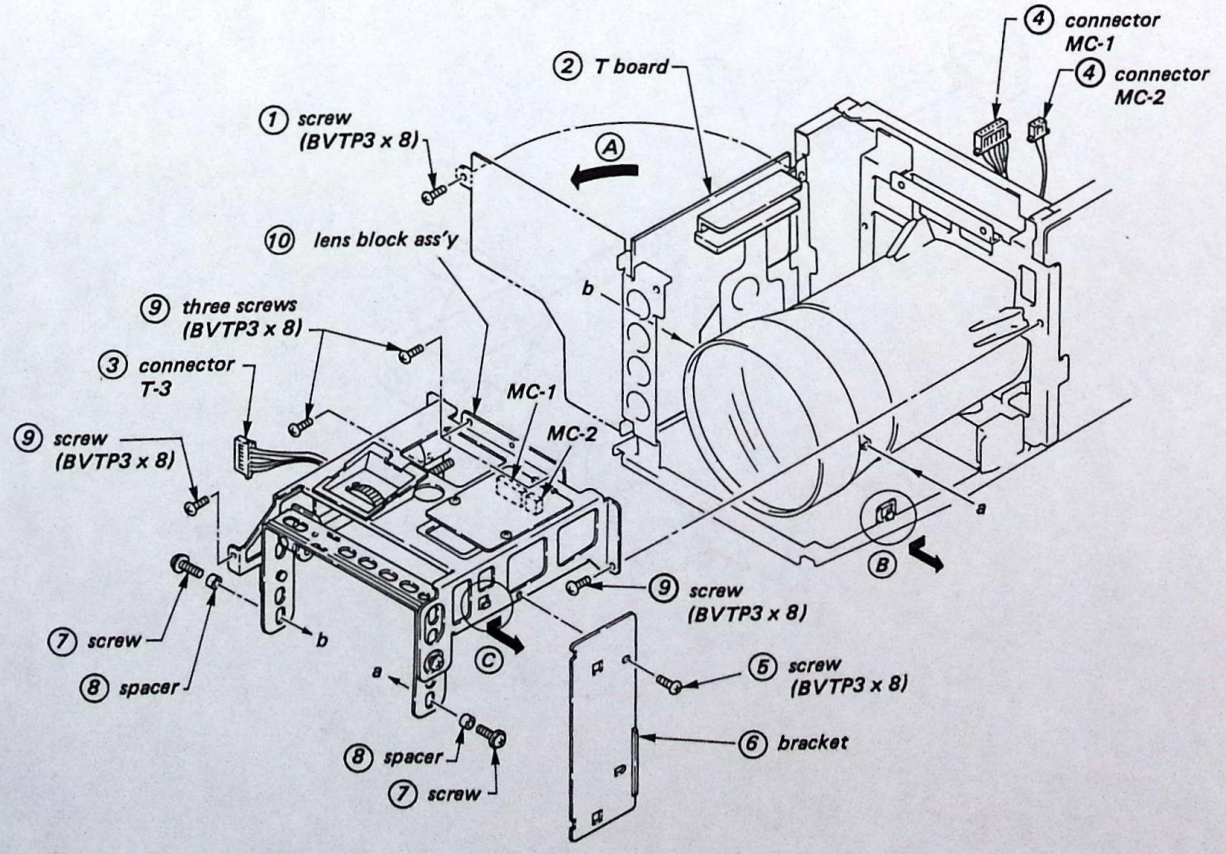

2-10. FOCUS MOTOR REMOVAL

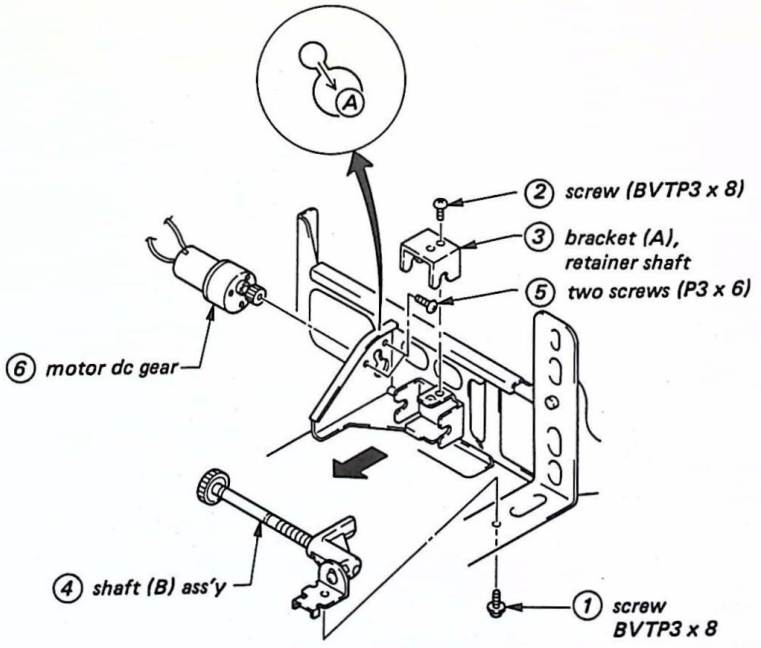

2-11. ARM (A) DRIVING REMOVAL

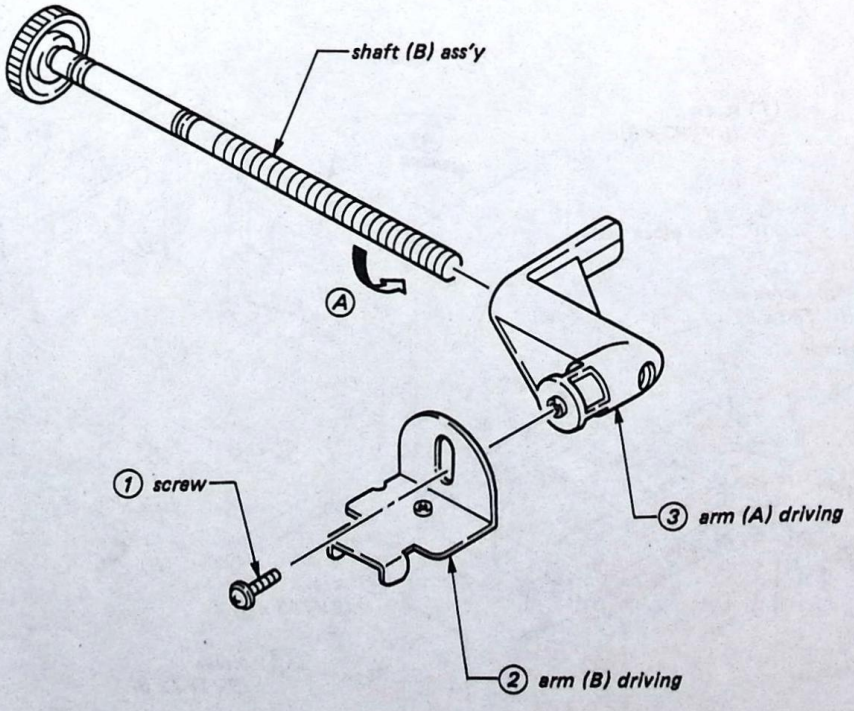

2-12. LENS POSITION ADJUSTMENT

Adjust the knob of shaft (A) ass'y so that the distance between the top of shaft and the edge of frame window is 25 – 30mm, as shown below.

** Please confirm that, after the adjustment, the arm (A), driving is located in the middle of micro switches S9002 and S9003 when replacing lens block ass'y after removal, please confirm that point.*

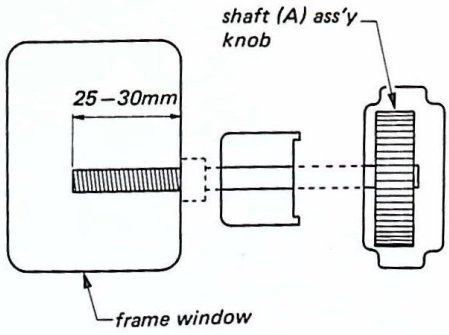

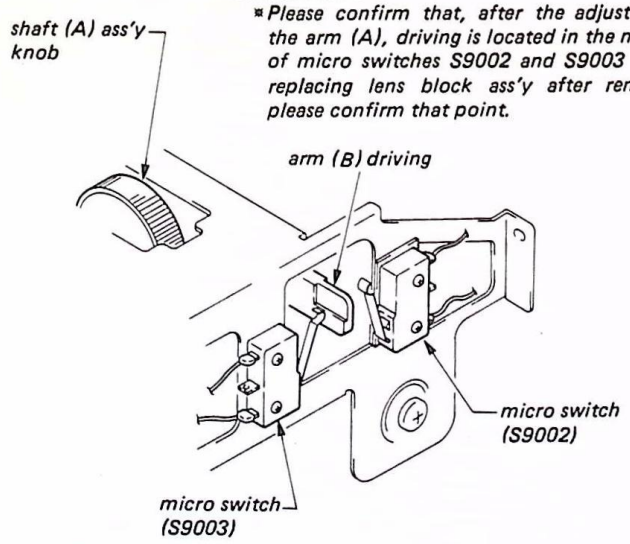

2-13. LENS REMOVAL

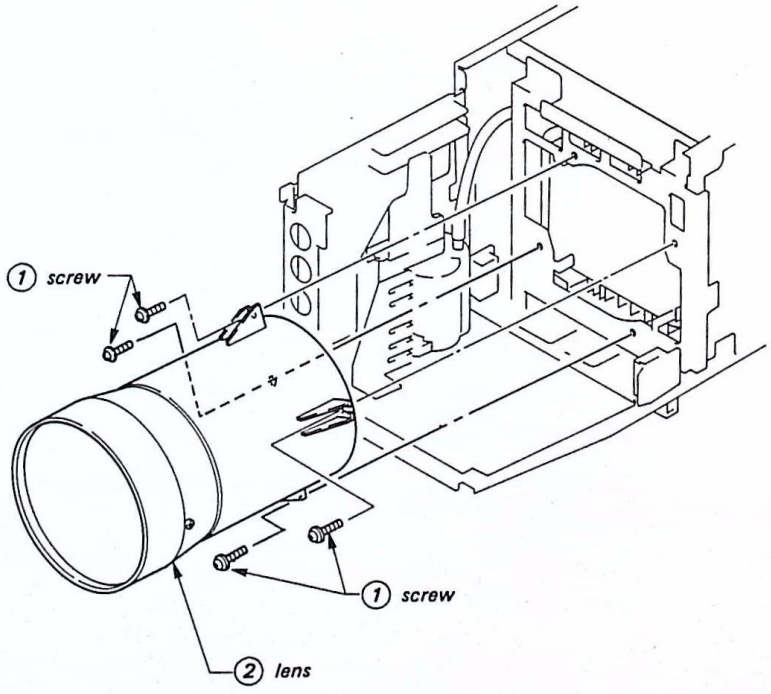

2-14. PICTURE TUBE REMOVAL

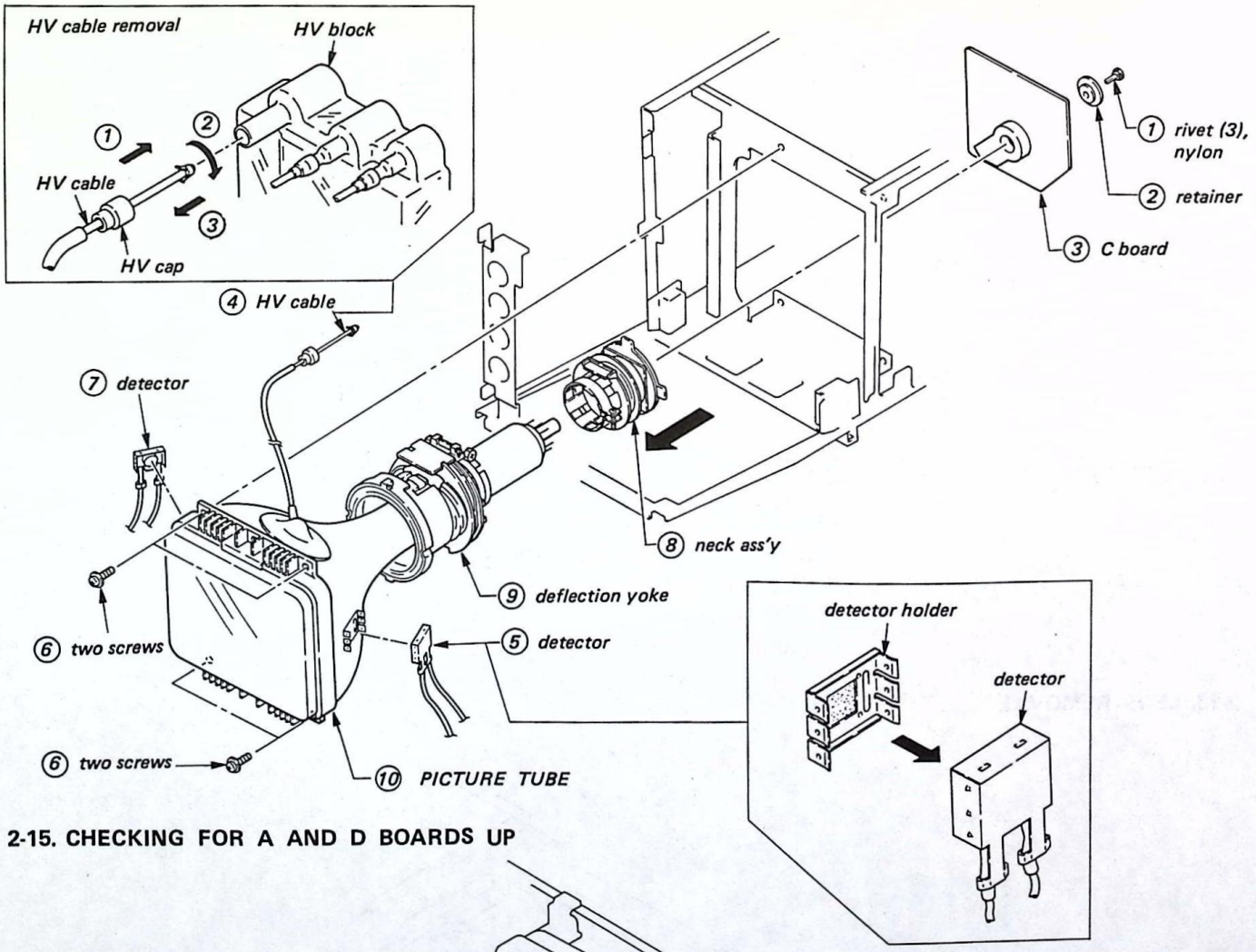

2-15. CHECKING FOR A AND D BOARDS UP

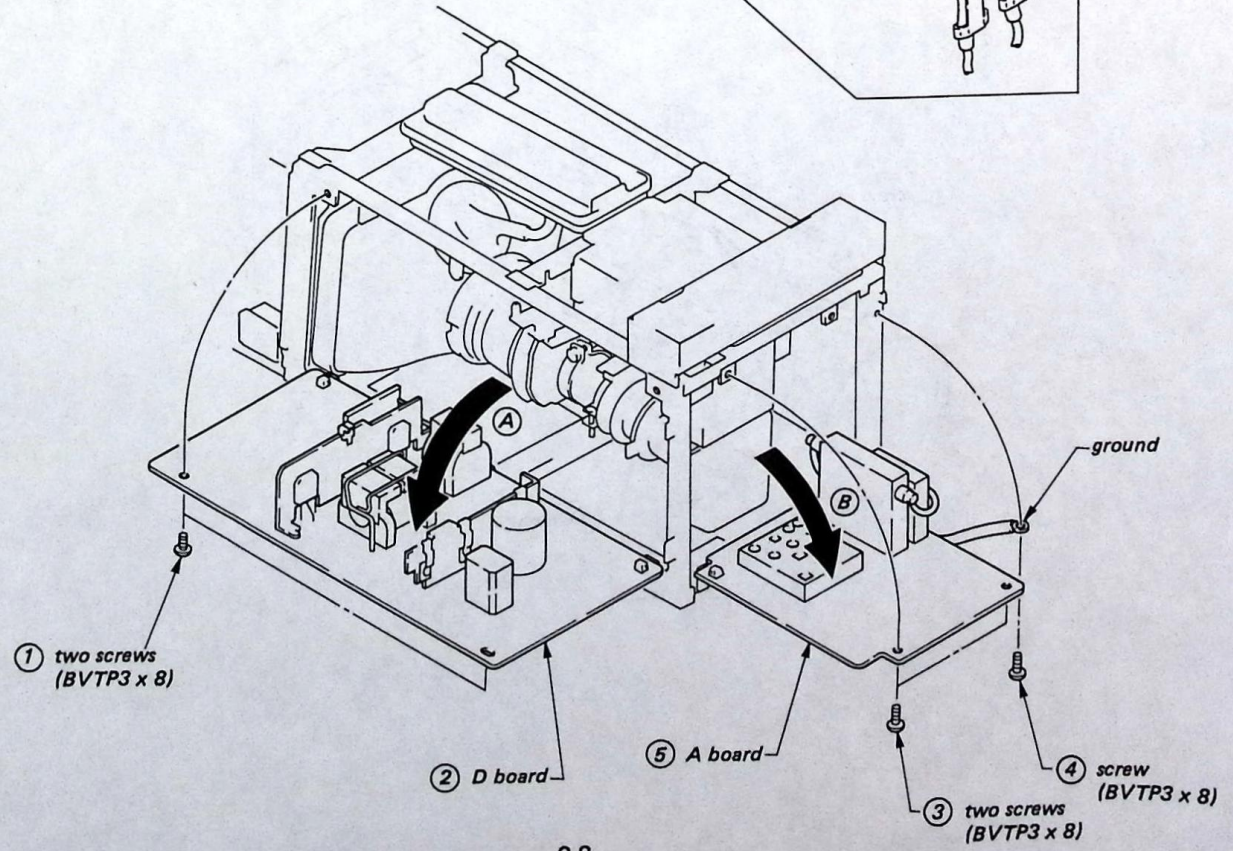

2-16. CHECKING FOR BA AND BB BOARDS

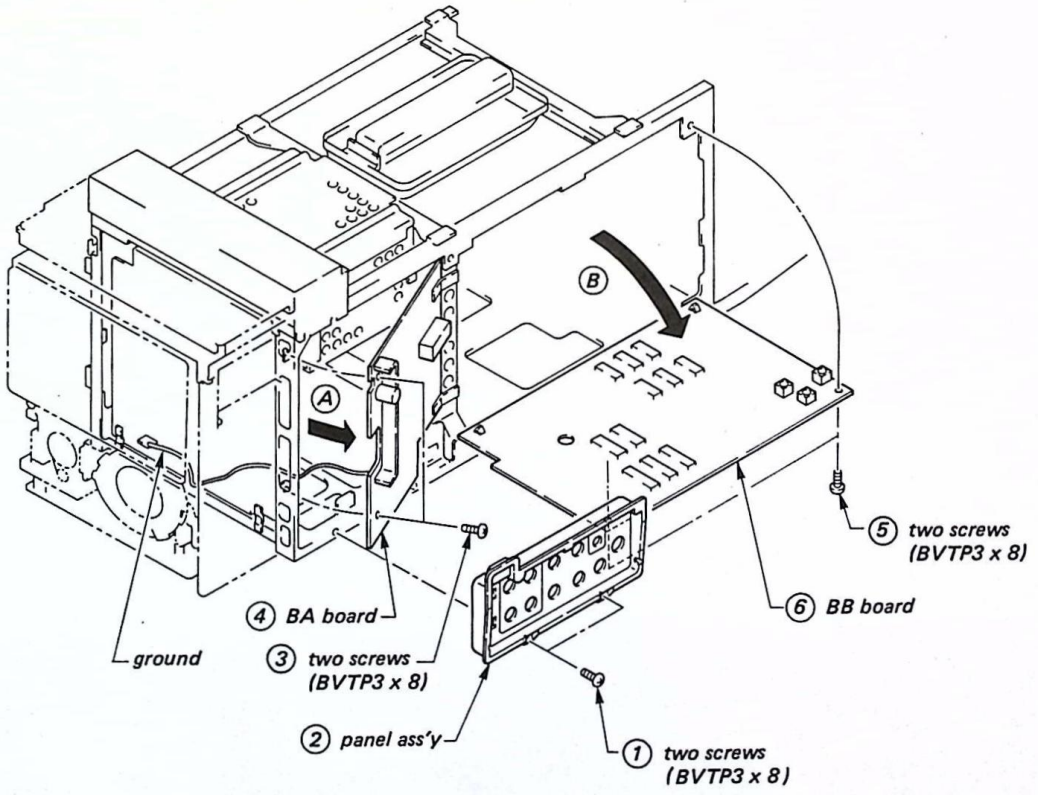

2-17. CHECKING FOR P BOARD

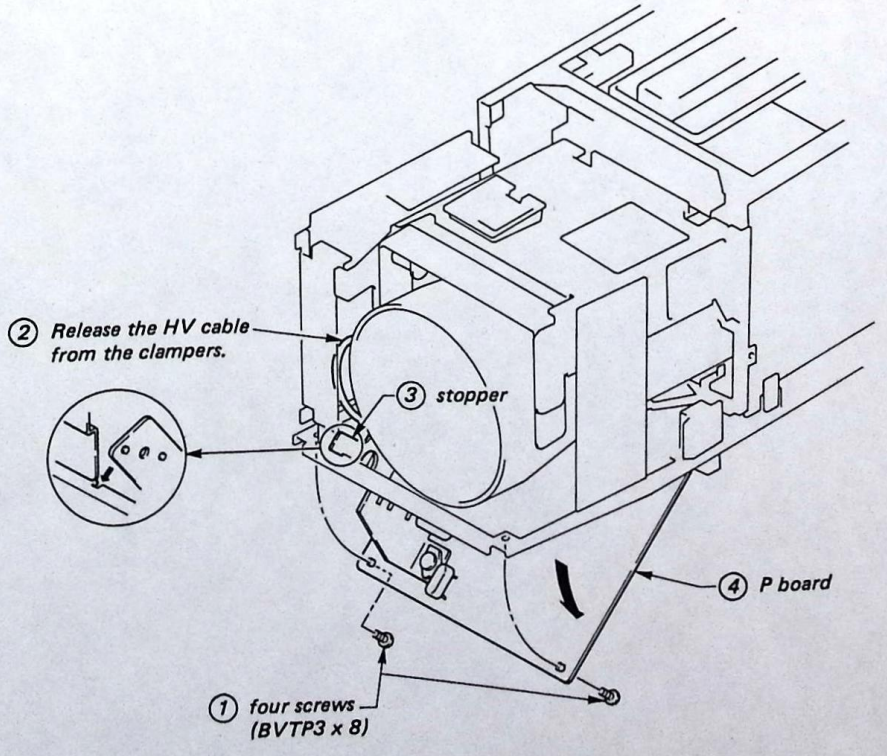

SECTION 3
VIDEO DISASSEMBLY
(Video : FP-60)

TABLE OF CONTENS

Title	*Page*
3. DISASSEMBLY	3-1
CASSETTE COVER	3-1
CASSETTE COMPARTMENT ASSY	3-1
CASE, UPPER ASSY	3-2
MC-1 BOARD	3-2
FRONT PANEL ASSY	3-3
MA-6 BOARD	3-3

3. DISASSEMBLY

CASSETTE COVER

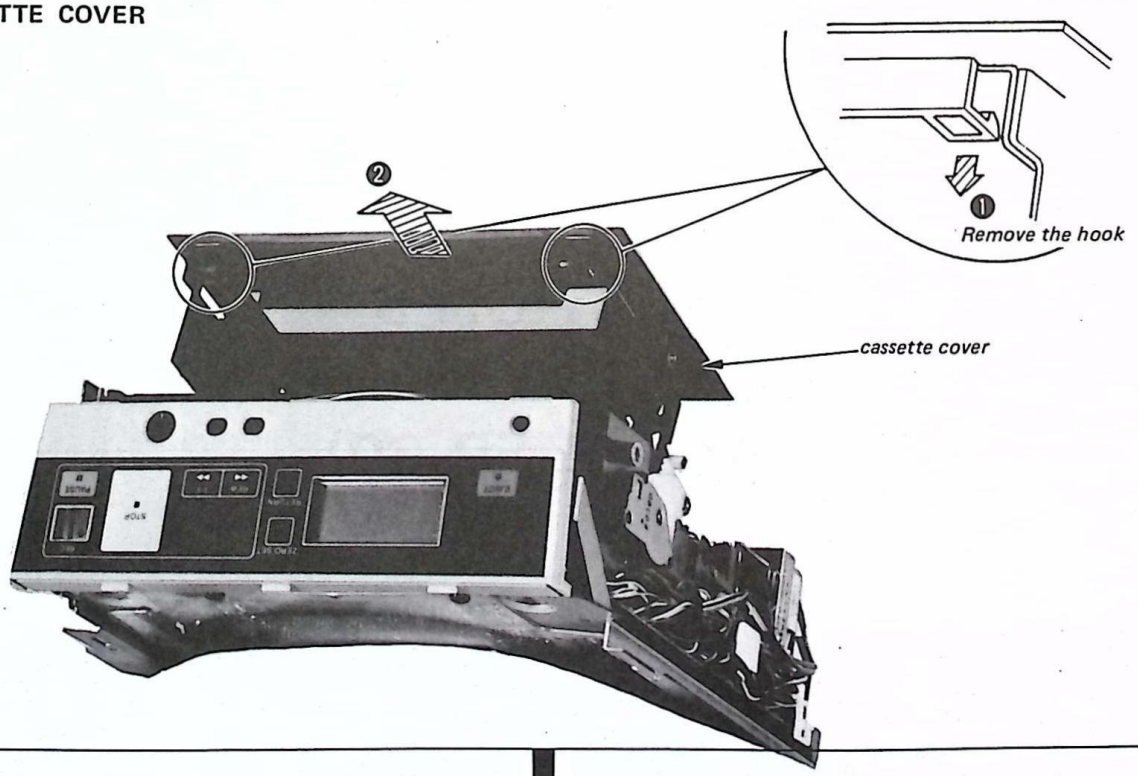

CASSETTE COMPARTMENT ASSY

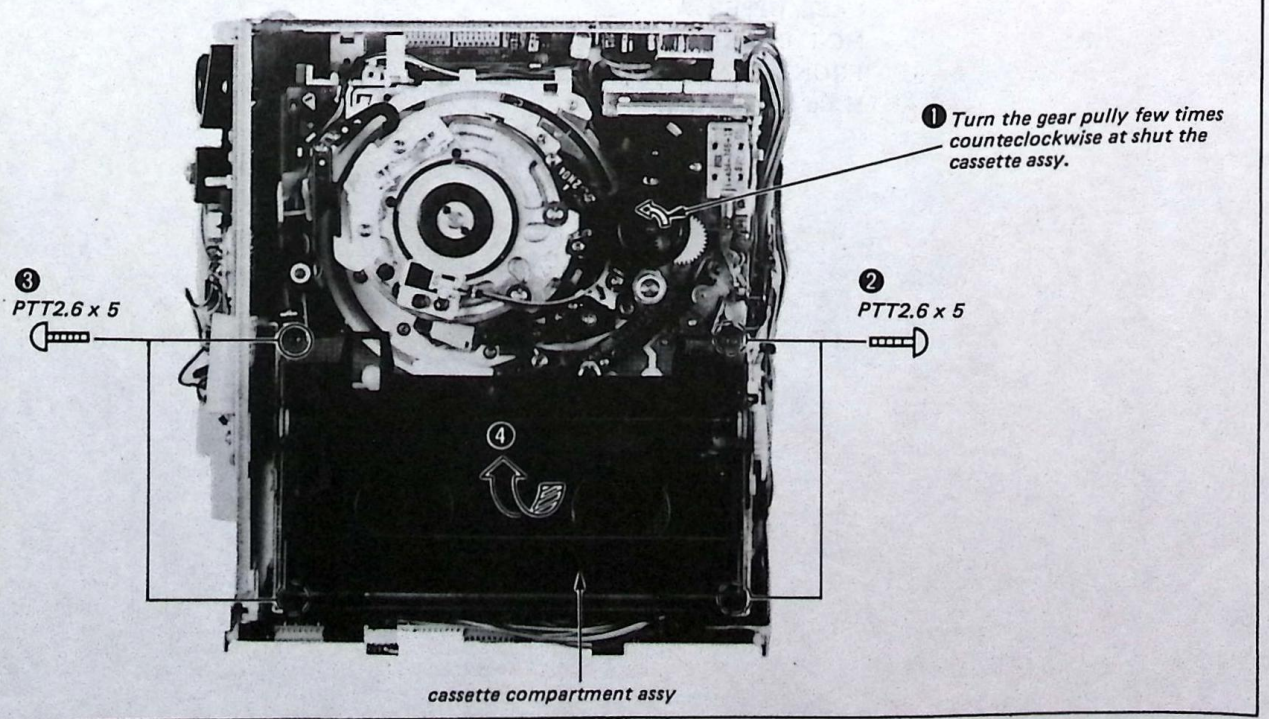

CASE, UPPER ASSY

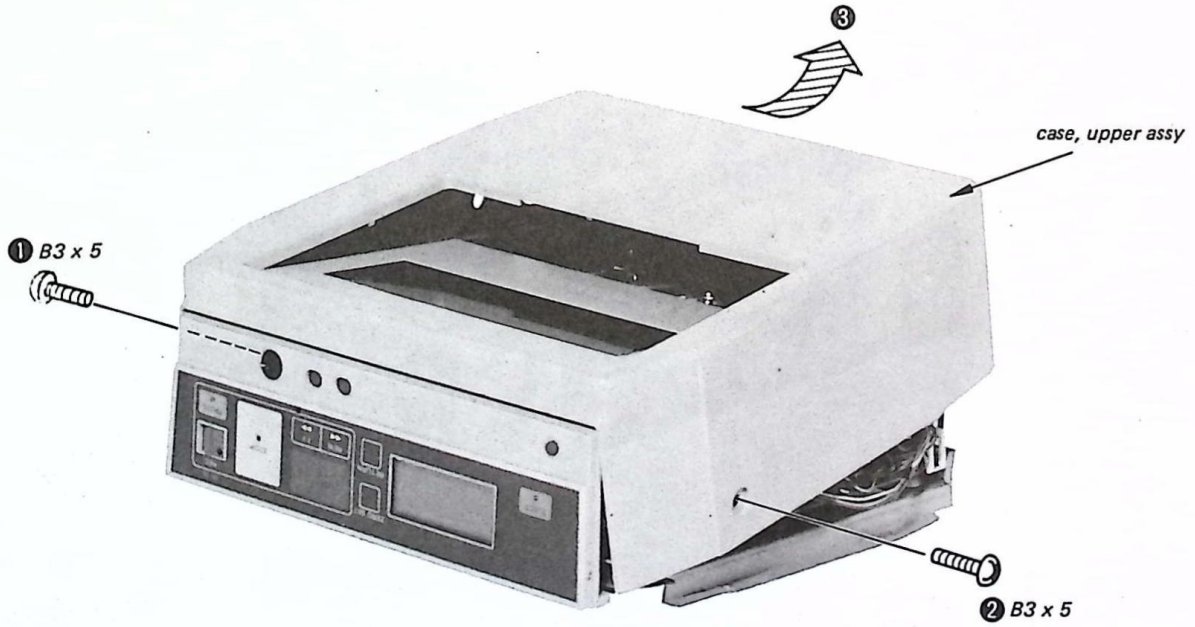

MC-1 BOARD

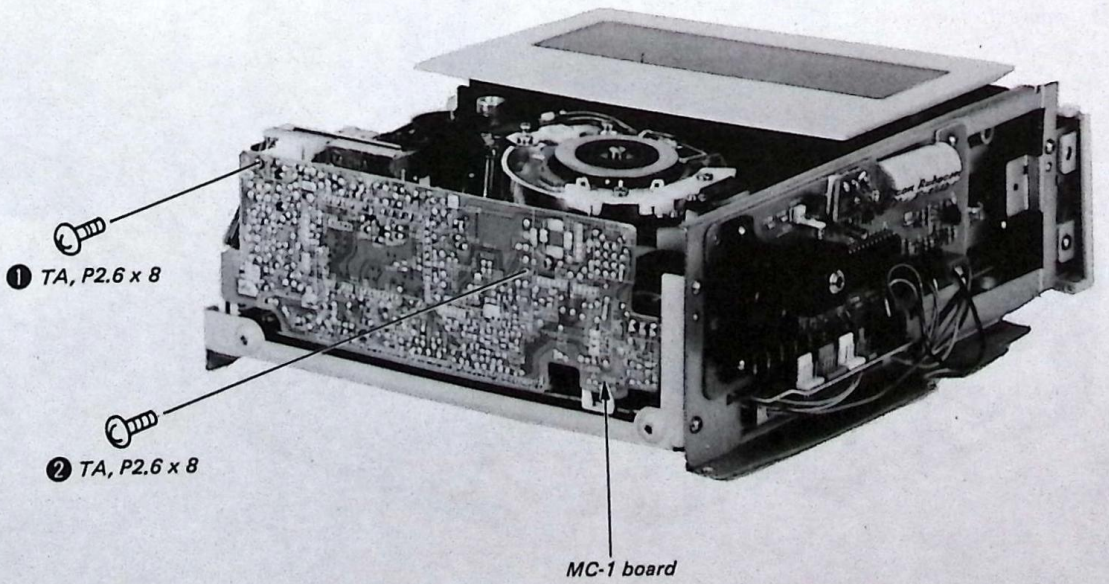

FRONT PANEL ASSY

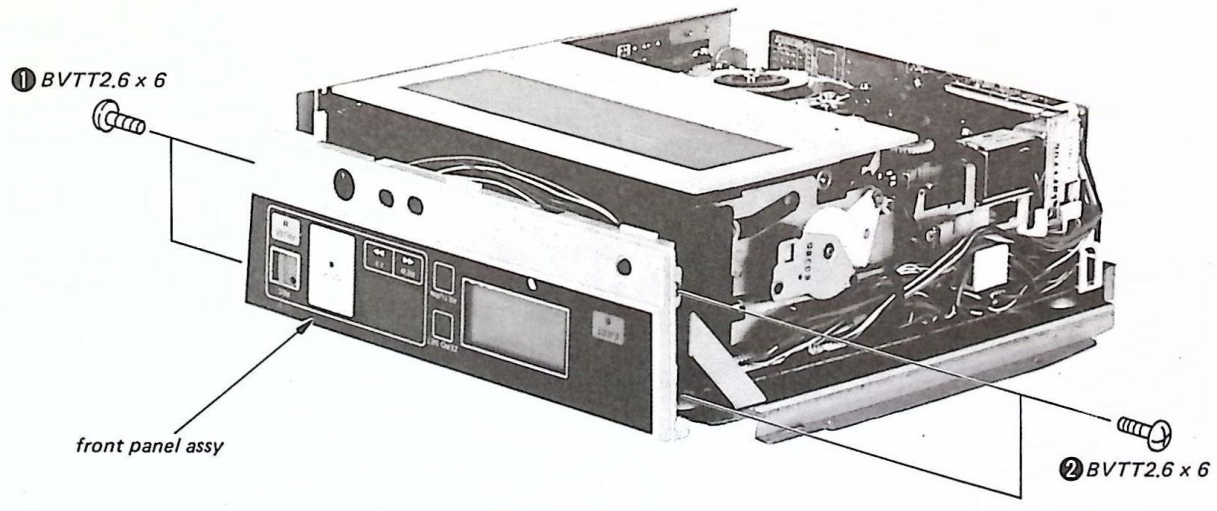

MA-6 BOARD

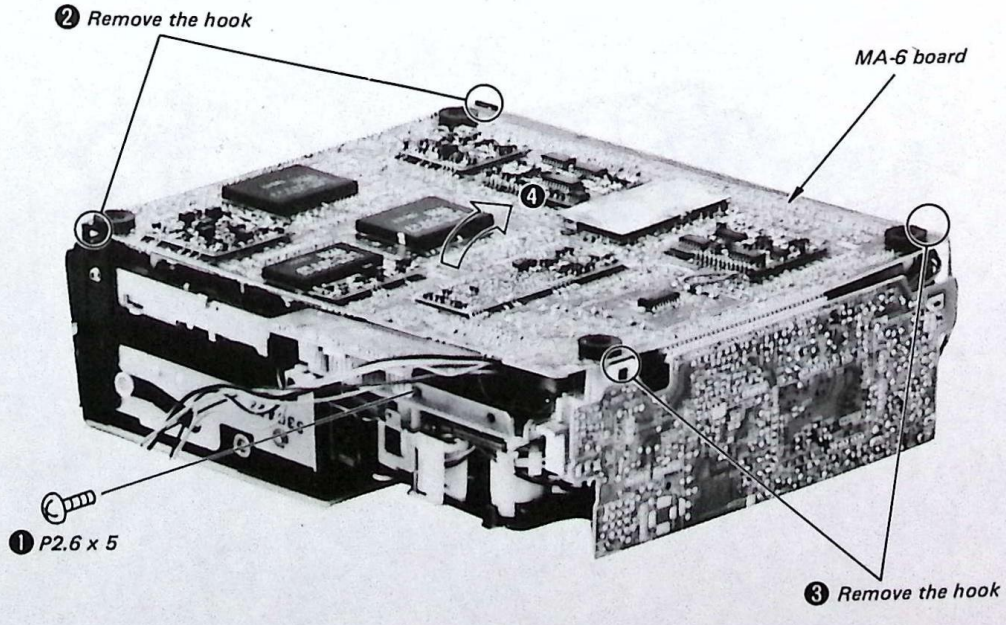

SECTION 4
ADJUSTMENTS
(Projector:FP-60/62)

TABLE OF CONTENTS

Section	*Title*	*Page*
4. ADJUSTMENTS		
4-1.	Setup Adjustments	4-2
4-1-1.	DY Mounting Angle Adjustment	4-2
4-1-2.	Horizontal ID Error Adjustment	4-2
4-1-3.	FOCUS Adjustment	4-4
4-1-4.	CUT OFF Adjustment	4-4
4-1-5.	R/I WHT, A/D OFFSET Adjustment	4-4
4-1-6.	BKG LEVEL Adjustment	4-5
4-1-7.	Color Uniformity Adjustment	4-5
4-1-8.	White Balance Adjustment	4-6
4-1-9.	Peak Luminance Adjustment	4-6
4-2.	Circuit Adjustments	4-7
4-2-1.	A Board Adjustment	4-7
4-2-2.	BA Board Adjustments	4-8
4-2-3.	BB Board Adjustments	4-9
4-2-4.	D Board Adjustments	4-12
4-2-5.	P Board Adjustments	4-15
4-2-6.	Hold Down Adjustments	4-19

PJ ADJUSTMENTS

SECTION 4
ADJUSTMENTS

1. Precautions, Adjustment and Check for CRT Replacement

Precautions

1) Be sure to remove the nylon rivet on the C board before removing the board.
2) Insert the CRT so that the detector mounting bracket, high voltage cap and cable do not touch the chassis.
3) The DY neck assembly must be secured in the specified location.

Order for Adjustment and Check

1) Picture (When the picture is all white or retrace lines are visible, perform static focus or CUT OFF adjustment)
2) DY mounting angle adjustment
3) V size, V center, H center (for horizontal ID error) adjustments
4) Static focus adjustment
5) CUT OFF adjustment
6) R/I WHT, A/D OFFSET adjustments
7) BKG LEVEL adjustment
8) Color uniformity check (perform as necessary)
9) G voltage check (perform CUT OFF adjustment as necessary)
10) White balance check and adjustment
11) Peak luminance check (perform as necessary, then check static focus and LANDING)
12) BKG level readjustment

4-1. SETUP ADJUSTMENT

Fitting the DY and neck assembly onto the CRT.

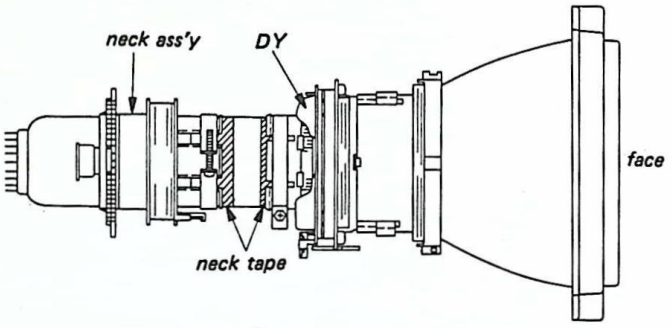

Fig. 1

The rear edge of the neck assembly should be aligned with the edge of the G1B. electrode (Fig. 2)
Note: DY should be flush with the funnel.

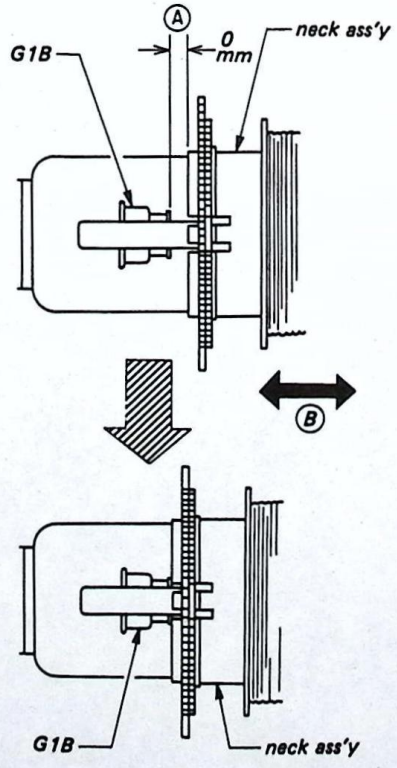

Fig. 2. Neck assy position adjustment

Adjustments for CRT Replacement

PICTURE When picture is all white or retrace lines are visible, perform static focus or CUT OFF adjustment.

4-1-1. DY Mounting Angle Adjustment

1. Input a crosshatch signal.
2. Set the DY angle so that the back of it does not protrude from the neck tape, as shown in Fig. 2. (Fig. 3)

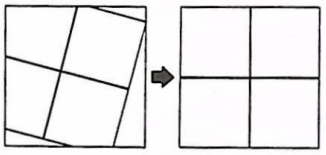

Fig. 3

4-1-2. Horizontal ID Error Adjustment

1. PAC, V SIZE, V CENT
   1) Input a monoscope signal and crosshatch signal. Adjust PAC (L502) so that distortion at the top and bottom of the picture is minimum at this time.
   2) Switch so that the entire picture is centered with S501.
   3) Input a pattern generator crosshatch signal and adjust to about 11.5 frames with V SIZE (RV501).
2. H CENT Adjustment
   1) For sets with BB board C888 that has capacity (including rear mounted) of less than 1500PF, replace with 1500PF. At this time, mount normally.

C888 1-130-473-00 MYLAR 1500PF 51 50V (1-108-559-00)

   2) Oscilloscope connection

CH1	CRT cathode (C board)
CH2	Q802 emitter (BB board)
Trigger A	V DY pin center (DY)
Trigger B	BB-1 connector pin ① (BB board)

   3) Adjust D board H CENT (RV505) so that the time between CRT IK rise on the oscilloscope until index (ID) signal is obtained is 1.2 μS at the center of the picture (V direction). Also check that it is 1.2 μS ±0.22 μS at the top and bottom of the picture. (When not within this range, rotate the DY to adjust.)

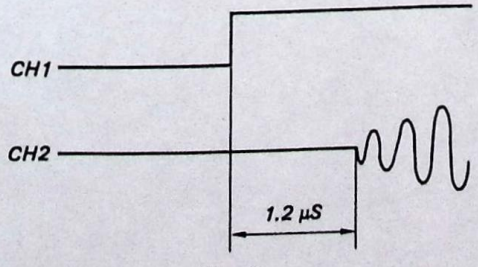

Fig. 4

Types of Index (ID) Errors

Name	Symptom	Main Causes
RUN IN ID error	All different color from the left to right edge of the picture. (Fig. A) (Made continue for several H also.)	A/D OFST (RV802), H CENT (RV505) adjustment defect means that signal can not be obtained accurately from the 1st ID stripe.
Horizontal ID error	Almost the same as RUN IN ID error, but at the right, blanking occurs and there is a dark area. (Fig. B)	Raster position is to the left because of defective H.CENT (RV505) adjustment, etc. (see page 4-2)
Black ID error	Different color from the dark portion of the picture to the right edge. (Fig. C) (Goes away when PICT, BRT are turned UP)	ID signal level is too small at dark portion due to BKG LEVEL (RV806) adjustment defect or limiter system defect, etc.
White ID error	Different color from the light portion of the picture to the right edge. (Fig. D) (Goes away when PICT is turned down)	The beam is thicker at the light portion and ID signal decreases, or phase changes 180 due to defective P.ABL (RV807) adjustment or defective focus system adjustment.

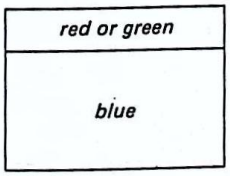

Fig. A

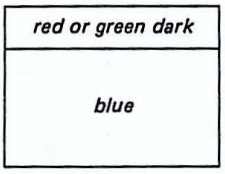

Fig. B

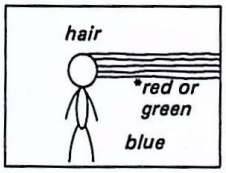

Fig. C

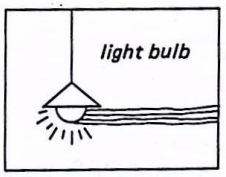

Fig. D

Fig. 5 Type index ID error

* In Fig. C, when error is not random, the most common cause is in the limiter system. (Random error occurs most often for RV806 defective adjustment.)

4-1-3. FOCUS Adjustment

1. Input a blue signal and set picture and color VR's to MAX.
2. Adjust with the static focus VR so that the color at the center of the picture is light. Then adjust with T board DFV AMP (RV051) and DFV PHASE (RV052) so that the color is even at the top and bottom of the picture (dynamic focus adjustment).
3. Adjust the static focus VR to a point slightly counterclockwise from the point where color uniformity at the center of the picture is optimum. (static focus adjustment) [HVR]
   Position the high and low amplitudes of the double pole magnet as shown in the Fig. 6.

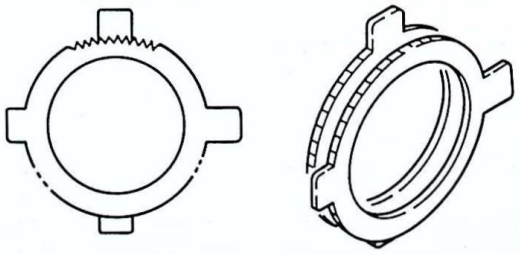

Fig. 6

4-1-4. CUT OFF Adjustment

1. Input a color-bar signal and set BRT VR to MIN.
2. Connect an oscilloscope to C board G1 pin, and adjust the CUT OFF VR (RV701) so that voltage at point A in Fig. 7 is 15 ±1 V.
3. When the voltage at point A is not within the specified range, it is OK is between 14 V – 25 V.

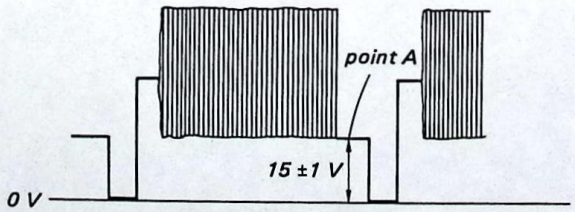

Fig. 7

4-1-5. R/I WHT, A/D OFFSET Adjustment

1. Input a color-bar signal.
2. Set BB board A/D OFFSET VR (RV802) 90° back from being turned fully clockwise. Then adjust R/I WHT VR (RV803) to the point where index error disappears. (See Note 1 when it does not disappear.)
3. Connect the oscilloscope to BB board IC804 pin ① and confirm that voltages at points A and B on the waveform are both more than 0.5 V. (If less than 0.5 V, adjust with RV803.)
4. Short between BB board IC812 pin ④ and ground.
   Connect an ammeter to both sides of C board R709 and confirm that the current value is less than 250 μA. (If not, see Note 2.)
5. Confirm that there is no index error when A/D OFFSET VR (RV802) is turned fully clockwise, then turn back and set 45° counterclockwise from the fully clockwise position.

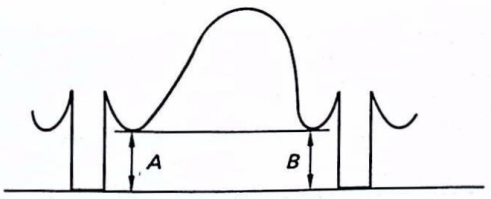

Fig. 8

Note 1:

1) Set R/I WHT VR (RV803) fully clockwise, and confirm that voltage value in 3. is more than 0.5 V and that current value is less than 250 μA. (If current is over 250 μA, adjust and check according to Note 2.)
2) Turn A/D OFFSET VR (RV802) clockwise, and confirm that error does not appear again between the point where it disappears and the fully clockwise position. Also, confirm that the rotation angle is more than 45° between the point where error disappears and the fully clockwise position.
3) Set RV802 at the point 45° clockwise from the point where index error disappears.

Note 2:

1) Adjust R/I WHT VR (RV803) so that the current value above is 250 μA.
2) Turn RV802 clockwise, and check that index error does not appear again between the point whrer it disappears and the fully clockwise position. Also, confirm that the rotation angle is more than 45° between the point where error disappears and the fully clockwise position.
3) Set A/D OFFSET VR (RV802) at the point 45° clockwise from the point where index error disappears.

4-1-6. BKG LEVEL Adjustment

1. Input an I.Q color-bar signal, set picture to MAX and BRT VR to MIN
2. When BB board R927 value is 15 kΩ, mount 47 kΩ parallel.
   When it is 27 kΩ, mount 180 kΩ parallel.
   Note: Adjustment may be impossible if R927 is 15 kΩ, so in this case change R927 to 27 kΩ, and adjust.
3. Adjust to the position where ID error after the black portion of the picture disappears.
4. Remove the resistor mounted parallel to R927.

4-1-7. Color Uniformity Adjustment

1. Input a blue signal.
2. Adjust BB board LAN DG CR (RV801) so that the color is even over the entire picture and so that color uniformity at the center of the picture is not reduced.
3. When color is still uneven around the periphery, change the position of D-26 connector to adjust. Or, adjust the dual pole magnet. (Fig. 9)

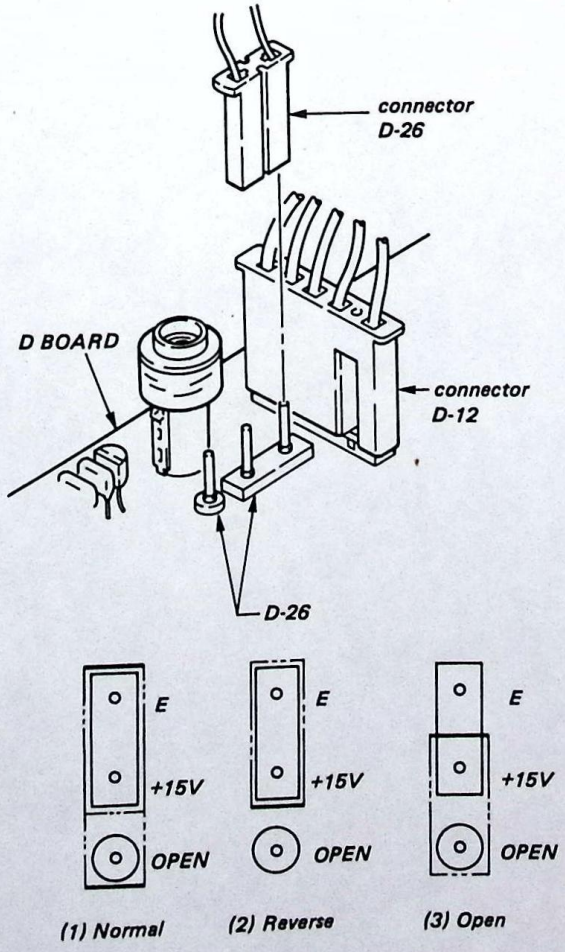

Fig. 9

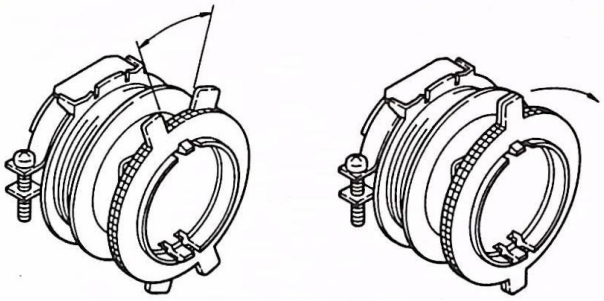

Fig. 10

(1) Overlap the high amplitudes.
(2) Rotate both magnets in this state (maximum 360°).
(3) Select the optimum position.
(4) Move 2 Magnetes slowly away from the optimum position at equal distance for optimum color purity.

4-1-8. White Balance Adjustment

1. For cut-off
   1) Input an all-white signal, and set picture level to 50% and BRT VR to MIN.
   2) Adjust white balance with R-BKG (RV808) and B-BKG (RV809).
   (Specification: 6500° +8MPCD)
2. For highlight
   1) Input an all-white signal, and set picture level to 100% and BRT VR to center click.
   2) Adjust white balance with R DRIVE (RV810) and B DRIVE (RV811).
   (Specification: 6500° +8MPCD)
   3) Adjust for cut-off and highlight, and if still off, adjust each repeatedly to get tracking.

4-1-9. Peak Luminance Adjustment

1. Input a blue signal, and with picture at MAX and SHARP at MIN, adjust BB board P.ABL VR (RV807), but within the range where color uniformity does not deteriorate.
2. If luminance stops changing while adjusting P.ABL VR (RV807), be sure to adjust within the range where luminance changes.

4-2. CIRCUIT ADJUSTMENTS

Adjustments for BB Board Replacement

1) R/I WHT, A/D OFFSET adjustments (RV803, 802)
2) BKG LEVEL adjustment (RV806)
3) H RESPONSE adjustment (RV805)
4) VCO CENT adjustment (CT801)
5) S.S DLAY adjustment (RV804)
6) BPT adjustment (T803)
7) LANDING adjustment (RV801)
8) BKG LEVEL adjustment
9) White balance adjustment (RV808, 809, 810, 811)
10) P.ABL adjustment (RV807)

Adjustments for D Board Replacement

1) HV hold down adjustment (use R527, R528 resistors from the board being replaced).
2) H FREQ adjustment (R502).
3) V SIZE, V CENTER, H CENTER rough adjustments (RV501, S501, RV505).
4) V PIN AMP, PAC adjustments (RV506, L502)
5) PIN AMP, PIN PHASE adjustments (RV504, 503)
6) H CENTER adjustment (RV505)

Adjustment and Check for Board Replacement
Adjustment for P Board Replacement

1) HV current adjustment (use R427, R428 from the board being replaced)
2) LIN DLY, LIN AMP adjustments (RV101, 102)
3) H LIN GAIN adjustment (RV103)

Note: (1) TEST EQUIPMENT REQUIRED

1. Oscilloscope
2. Digital multimeter
3. Color-bar/pattern generator
4. Frequency counter
5. Variable auto-transformer.

(2) INPUT SIGNAL

When making these adjustments, supply a color-bar or an off-air signal.

4-2-1. A Board Adjustment

GREEN DISPLAY ADJUSTMENT

1. *Connect the oscilloscope to A board Q1104 emitter. Adjust T1101 so that green display length is 45 µS when the PICTURE button is pressed continuously until it reaches MAX.*

Note: With blue signal input, there may be some sync-related color unevenness in green display, so change green display length slightly and adjust until color unevenness disappears.

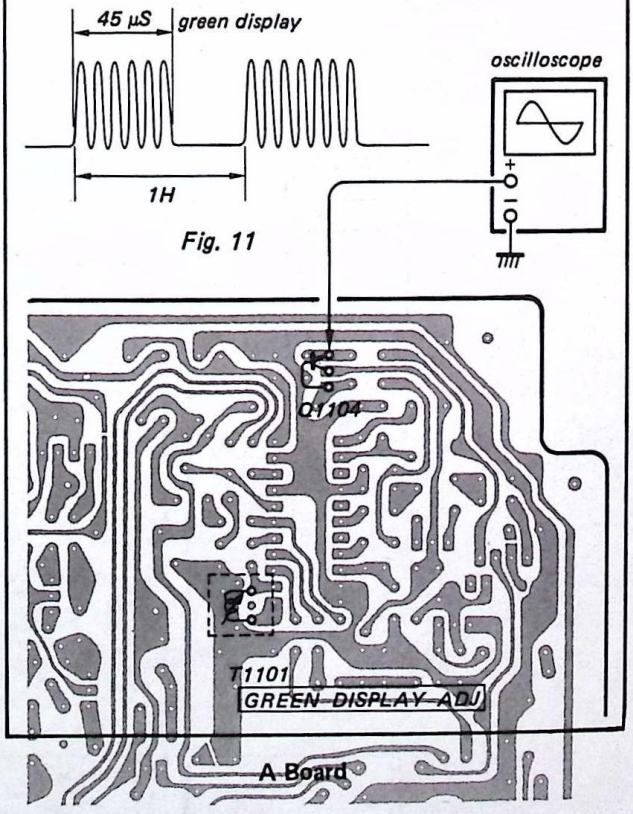

Fig. 11

4-2-2. BA Board Adjustments

14.3MHz OSCILLATION FREQUENCY fo ADJUSTMENT

1. *Receive color bar signal.*
   Set the HUE and COLOR control at 50% and PICTURE control at mechanical center.
2. *Connect a 10kΩ resistor between pin (30) of IC302 and ground.*
3. *Connect a 10kΩ resistor between pin (38) of IC302 and the 12V line.*
4. *Short circuit pins (15) and (16) of IC302.*
5. *Check pin (32) (B OUT) of IC302 with an oscilloscope to confirm that it is not in color synchronism.*
6. *Obtain color synchronism by means of trimmer capacitor CV301.*

SUB BRT ADJUSTMENT

1. *Receive color bar signal.*
2. *Adjust RV305 so the waveform on pin (32) (B out) of IC302 will be as shown in the Fig. 12.*

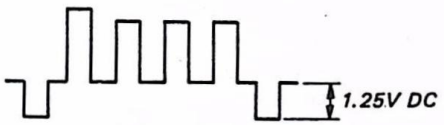

Fig. 12

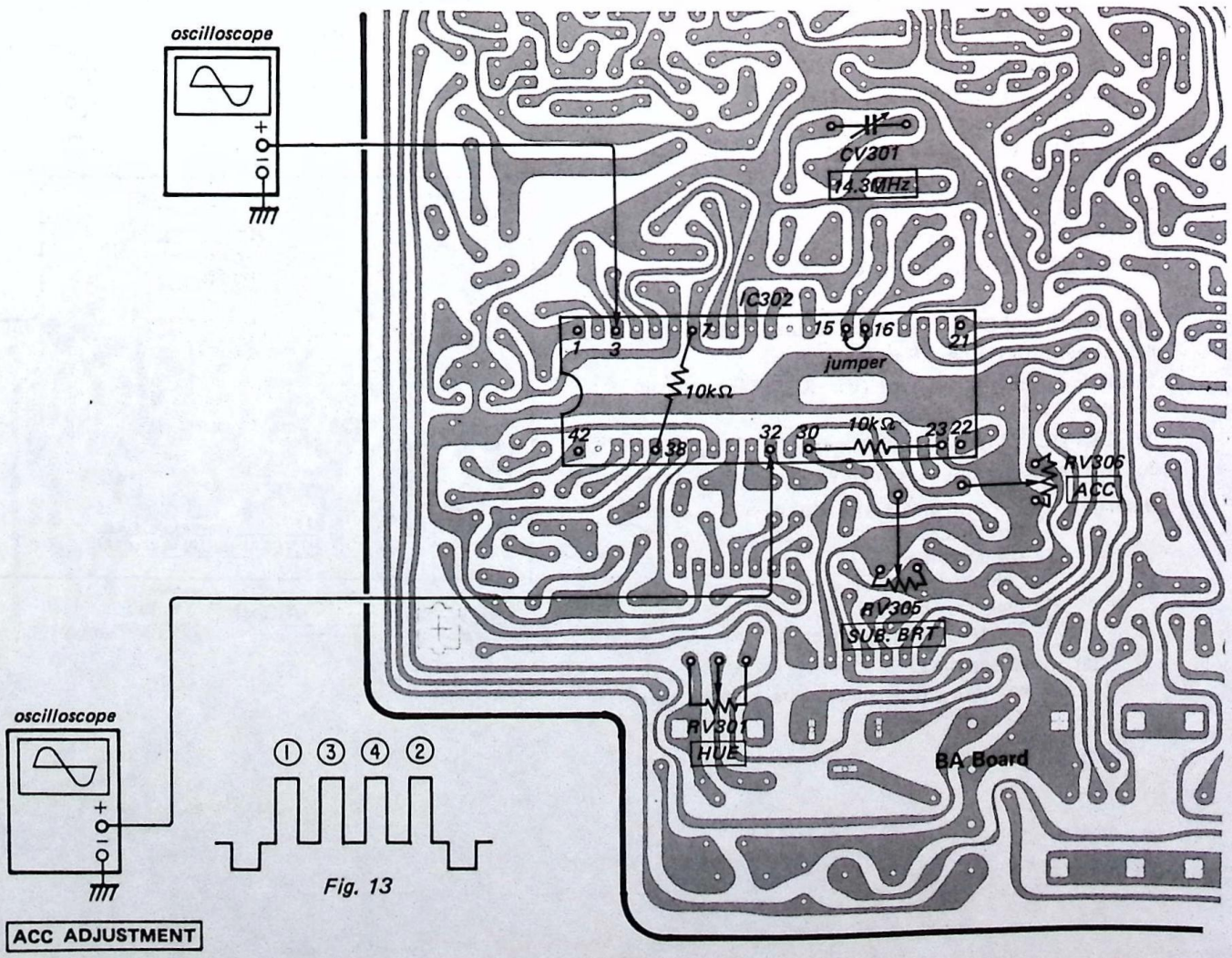

Fig. 13

ACC ADJUSTMENT

1. *Receive color bar signal.*
   Set the HUE, COLOR and PICTURE control at centering position.
2. *Check pin (32) (B out) of IC302 with an oscilloscope and adjust so the center point voltage of the ACC VR (RV306) is 10V ± 0.2V dc.*
3. *Adjust the HUE centering VR (RV301) so the blue output waveform will be as shown in Fig. 13. Give priority to levelling (1) and (2) and follow with (3) and (4).*

3.58MHz TRAP CHECKING

1. *Receive color bar signal.*
2. *Confirm that the 3.58MHz component of the waveform on pin (3) (Y in) of IC302 is being attenuated.*

4-2-3. BB Board Adjustments

CONFIRMING THE VOLTAGE

1. *Check the voltage on the 27V line.*
   Voltage should be of the rated value (27 ± 1V dc) when measured with a digital voltmeter connected to pin (1) of connector BB-7.
2. *Check the voltage on the 9V line.*
   Voltage should be of the rated value (8.2 – 8.9V) when measured with a digital voltmeter connected to pin (2) of connector BB-7 and to pin (2) of connector BB-8.
3. *Check the voltage on the –6V line.*
   The voltage on pin (4) of IC802 should be of the rated value ($-6\ ^{+0.3}_{-0.2}$V) when measured with a digital voltmeter.

EM BPT ADJUSTMENT

1. *Input a color-bar signal.*
2. *Set BB board EM BPT (T803) core position to a point about 3 mm from the top edge.*
3. *Adjust EM BPT (T803) core so that color-bar signal black portion is darkest.*
4. *Next input a crosshatch signal.*
5. *Adjust BKG LEVEL VR (RV806) until part of the picture starts to swing back and forth.*
6. *Adjust EM BPT (T803) so that the entire picture swings evenly.*
7. *Adjust BKG LEVEL VR (RV806) so that there is no swinging in the picture.*

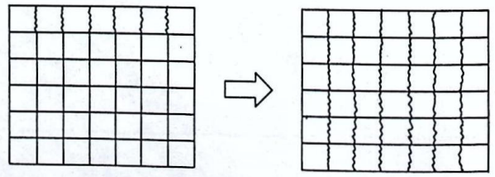

Fig. 14

CONFIRMING THE CLOCK

Connect a frequency counter to pin (11) of IC818 and check whether the frequency counter shows the rated value.
Clock frequency: 5 MHz ±0.004 MHz

EM TRAP ADJUSTMENT

(5.6 MHz, 11.2 MHz ADJUST)

1. *Remove BB board BB-5, BB-6 and BB-11 connectors. (Picture in cut-off state.)*
2. *Input a 5.6 MHz, 1.5 Vp-p (unterminated) CW signal from a sweep generator between BB board BB-5 connector pin (1) and ground.*
3. *Adjust T801 so that the output level of BB board R867 and C846 intersection is minimum.*
4. *Change sweep generator oscillation frequency to 11.2 MHz and adjust output in the same way with T802.*
5. *Reconnect BB-5, BB-6 and BB-11 connectors.*
   (Note: Disconnect and plug in connectors with power off.)

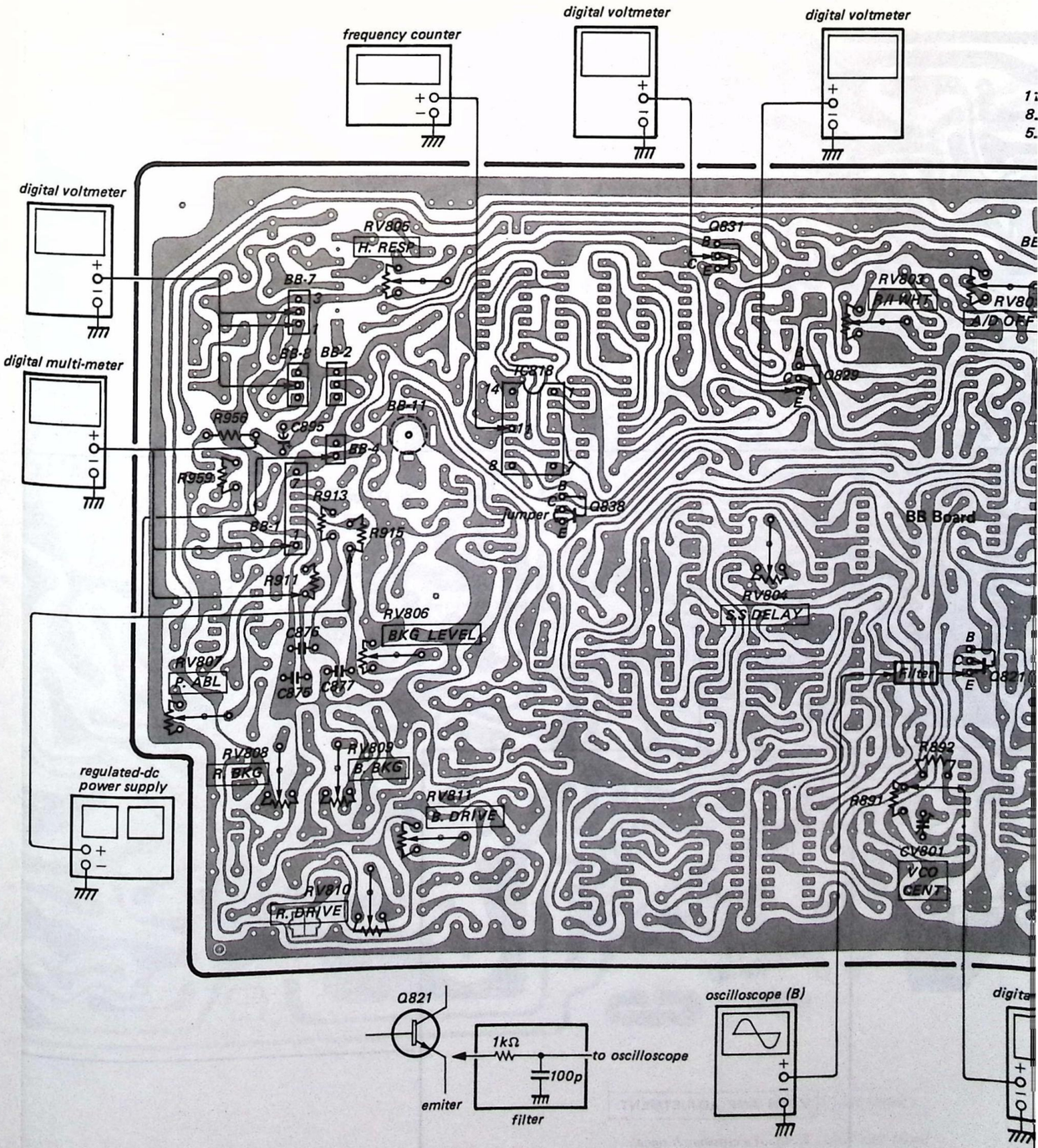

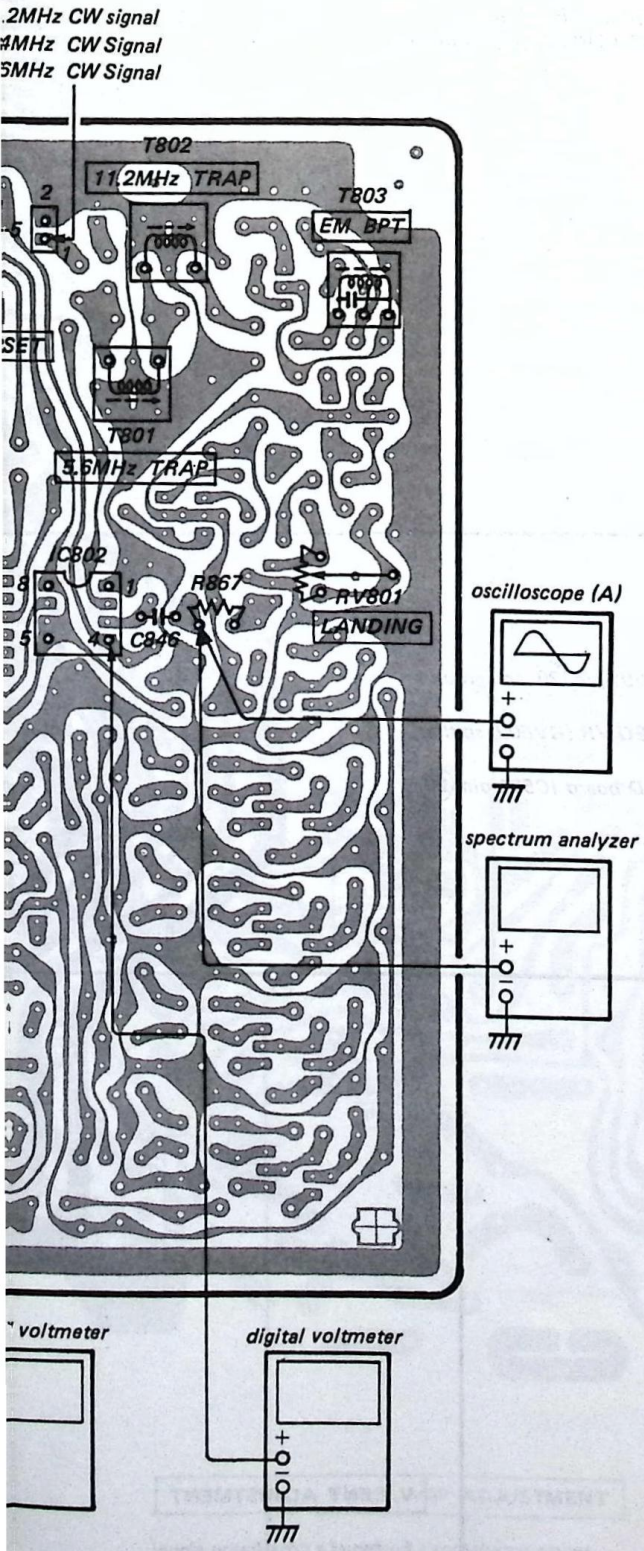

S.S DLY ADJUSTMENT

1. *Input an all-white signal.*
2. *Connect the LPF shown in Fig. 14 between BB board Q821 emitter and ground.*
3. *Connect an oscilloscope (H cycle) to Q821 emitter output, and adjust S.S DLY VR (RV804) for minimum transient at the front of the waveform.*
   Note: Adjust the rear of the waveform with P board LIN DLY VR (RV101).

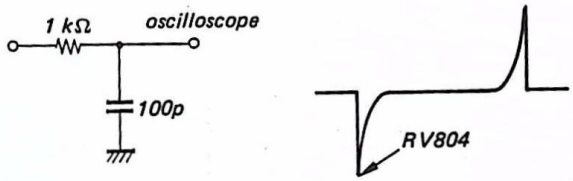

Fig. 15

H. RESP ADJUSTMENT

1. *Input an all-white signal.*
2. *Connect the oscilloscope between BB board Q820 collector and ground.*
3. *Turn BB board H. RESP VR (RV805) clockwise so that the waveform oscillates slightly.*
4. *Next turn H. RESP VR (RV805) counterclockwise and adjust to a position within 20–30% of the point where the oscillation stops.*
5. *Input a crosshatch signal and confirm that there is no oscillation at the left and right of the top of the picture.*

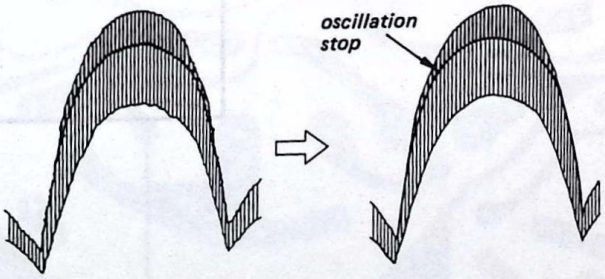

Fig. 16

VCO CENT ADJUSTMENT

1. *Connect a digital multimeter to both sides of BB board R904.*
2. *Adjust BB board VCO CENT (CV801) so that the reading is within 2.5–3.0 V.*

PJ ADJUSTMENTS

4-2-4. D Board Adjustments

PAC, V SIZE ADJUSTMENTS

1. *Input a crosshatch signal.*
2. *Adjust D baord PAC (L502) so that distortion at the top and bottom of the picture is minimum.*
3. *Adjust D board V SIZE VR (RV501) so that there are about 11.5 frames.*

H. FREQ ADJUSTMENT

1. *Input a color-bar signal.*
2. *Short between D board IC501 pin (20) and ground with a clip.*
3. *Adjust with D board H FREQ VR (RV502) so that the picture stops flowing.*
4. *Remove the clip between D board IC501 pin (20) and ground.*

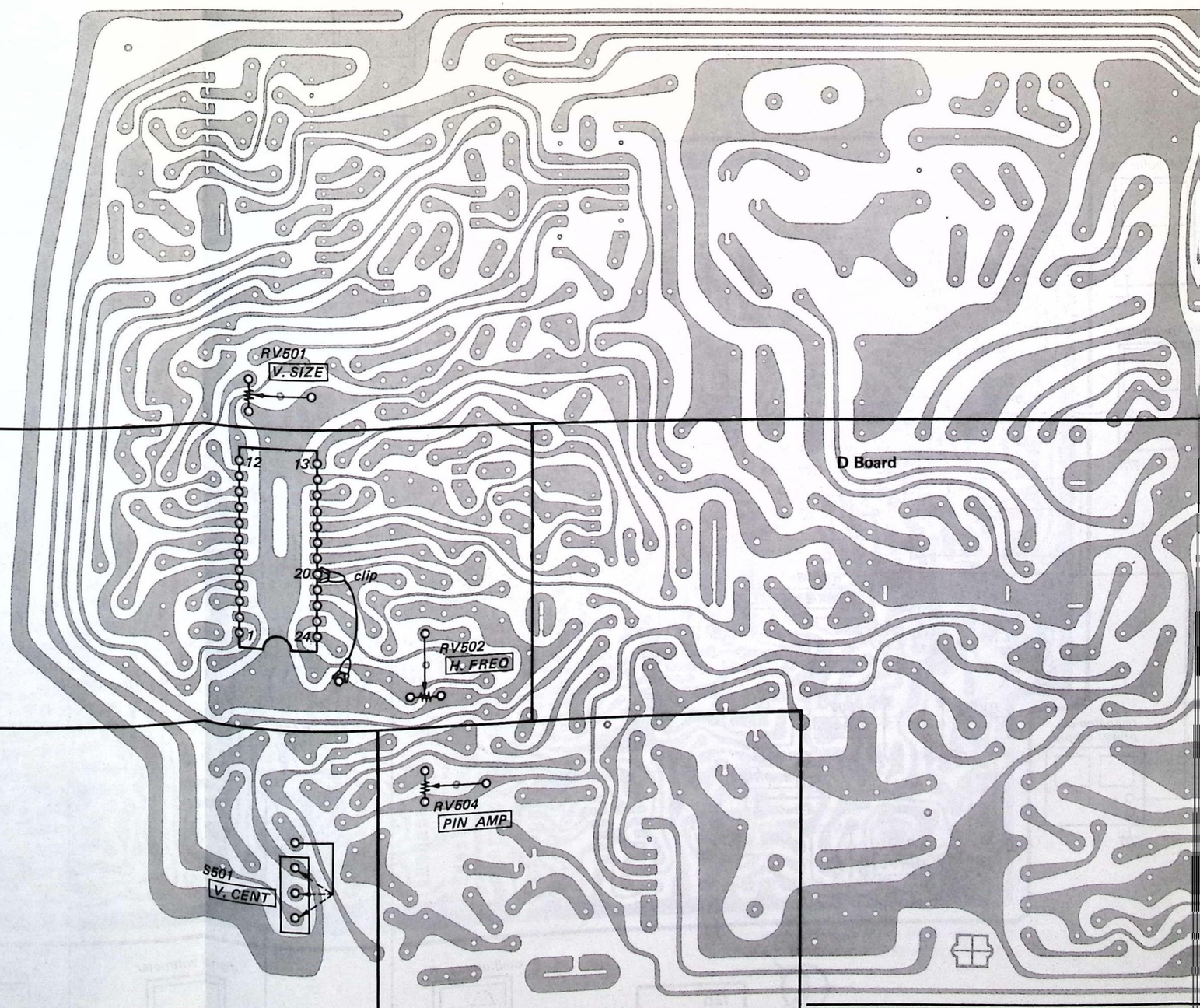

V. CENT ADJUSTMENT

1. *Input a crosshatch signal.*
2. *Select V CENT with D board V CENT SW (S501).*

V PIN AMP ADJUSTMENT

1. *Input a crosshatch signal.*
2. *Adjust PIN distortion with D board V PIN AMP (RV504).*

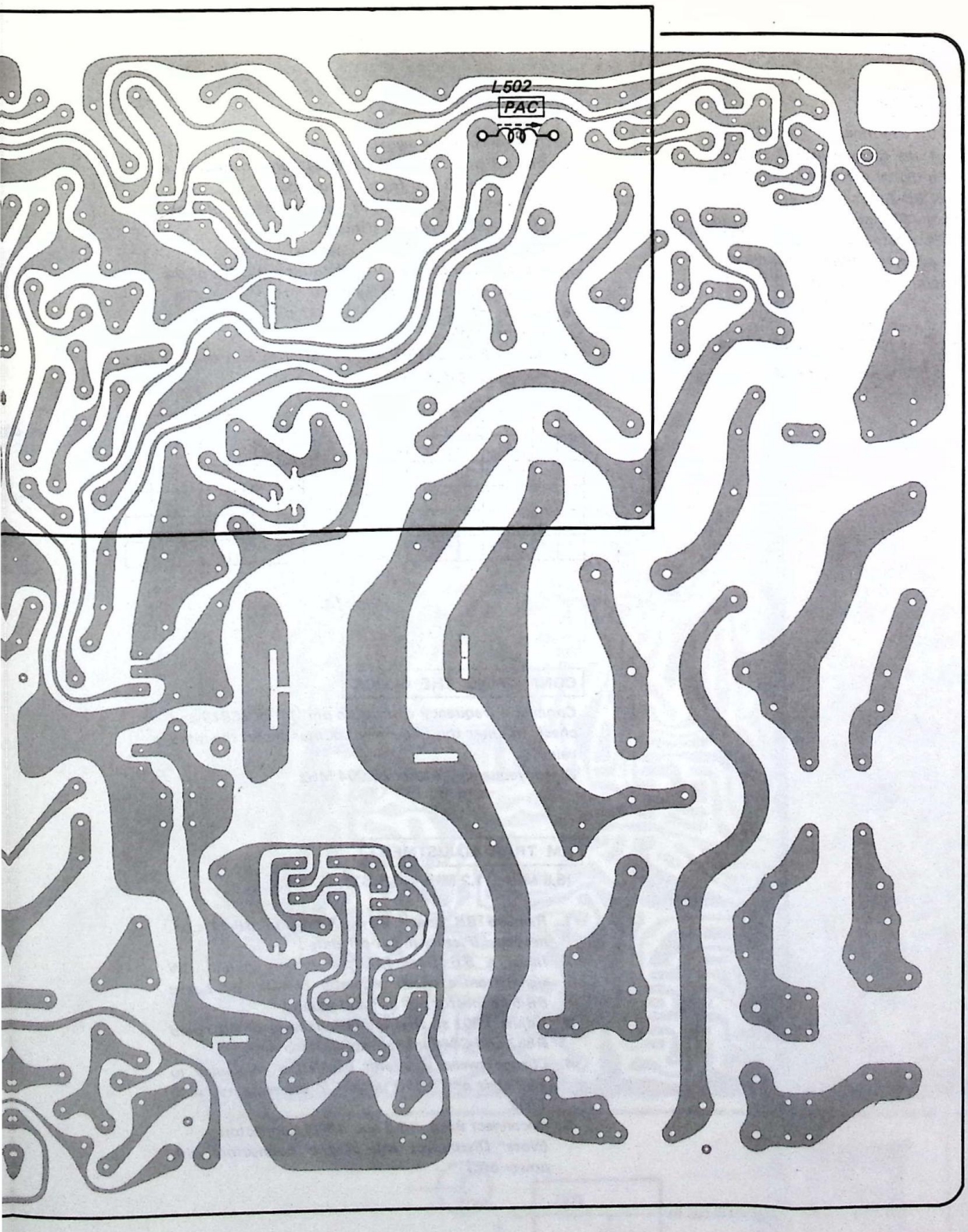
L502
PAC

4-2-5. P Board Adjustments

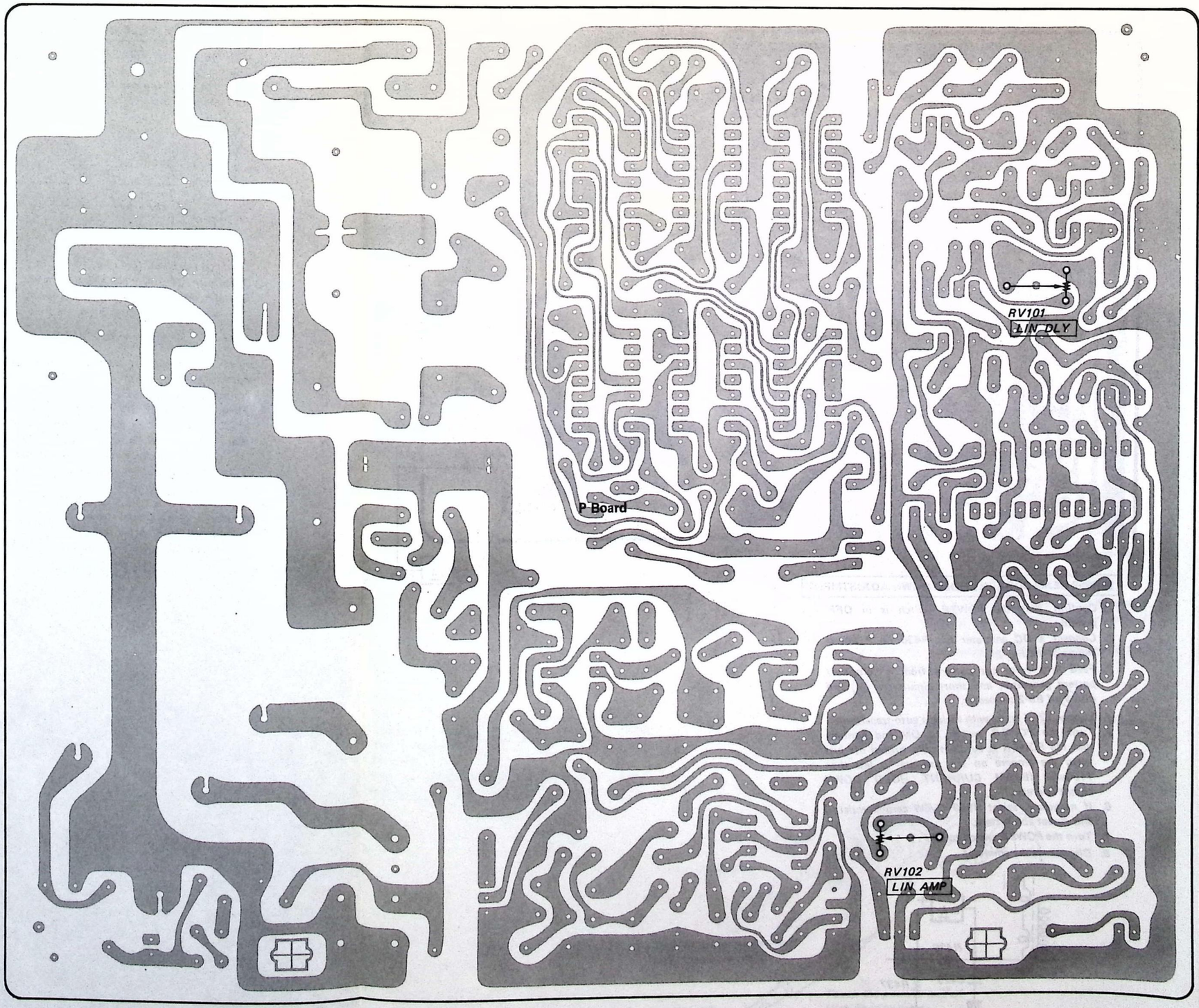

P Board

PJ ADJUSTMENTS

PIN PAHSE, PIN AMP ADJUSTMENTS

1. *Input an all-white signal.*
2. *Connect the LPF shown in Fig. 17 between BB board Q821 emitter and ground, and observe its output on an oscilloscope (V cycle).*
3. *Adjust PIN PHASE VR (RV503) and PIN AMP VR (RV504) so that the waveform on the oscilloscope is horizontal.*

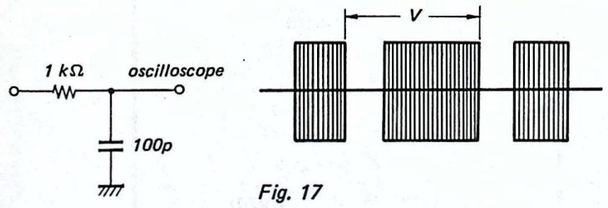

Fig. 17

LIN DLY, LIN AMP ADJUSTMENTS

1. *Input an all-white signal.*
2. *Connect the LPF shown in Fig. 18 between BB baord Q821 emitter and ground, and observe its output on an oscilloscope (H cycle).*
3. *Adjust LIN DLY VR (RV101) so that the portion of the waveform indicated in Fig. 18 is minimum.*
4. *Confirm that the picture oscillates in the horizontal direction when LIN AMP VR (RV102) is turned fully counterclockwise. Then, start turning RV102 clockwise and set in a position 20–30% from the position where oscillation stops.*

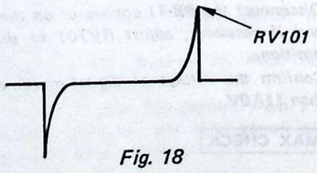

Fig. 18

4-2-6. Hold Down Adjustments

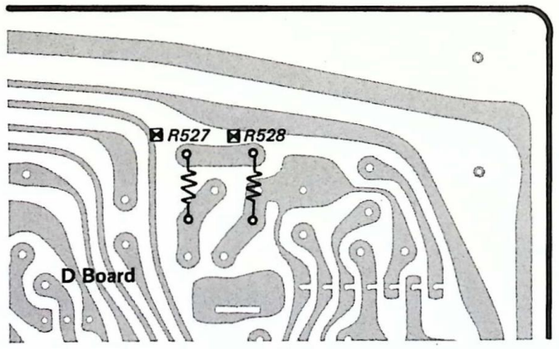

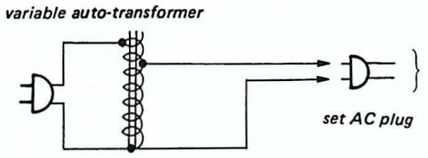

- When replacing the following components, make the HV HOLD DOWN, HV REG and BEAM CURRENT HOLD DOWN adjustments.
  HV block.
- When replacing the following components, make the HOLD DOWN and BEAM CURRENT HOLD DOWN adjustments.
  D board complete
  D503, IC501, R521, R522, R523 . . . . . in D board
- When replacing the following components, make the BEAM CURRENT HOLD DOWN and HV REG adjustments.
  P board complete
  R432 . . . . . .in P board
- When replacing the following components, make the HV REG adjustment.
  IC403, IC404, R417, R420, R424, R425, R426, R427, R428, R429 . . . . . .in P board
- When replacing the following components, make the HV HOLD DOWN adjustment.
  D505, Q503, R524, R525, R526, R527, R528 . . . . . in D board
- When replacing the following components, make the BEAM CURRENT HOLD DOWN adjustment.
  D504, D516, Q513, R564, R565, R566, R582 . . . . . in D board
  R433, R434, R435, R437 D836, D837, Q837, R933, ...in P board
  R956, R957, R958, R959 R960, R972, R974, R980, R982 . . . . . .in BB board
  BB board complete

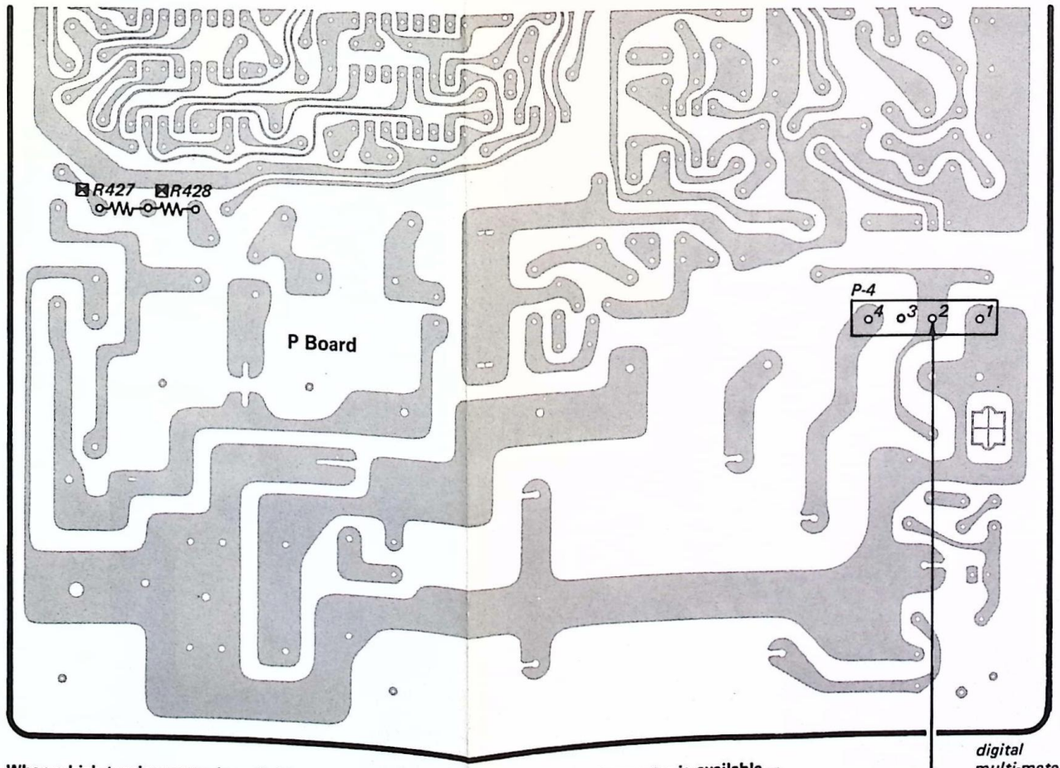

— When a high tension meter is available —

R527, R528 HV HOLD DOWN ADJUSTMENT

1. *Confirm that the power switch is in OFF position.*
2. *Connect the positive lead of the high tension meter to the HV. DC block and the negative lead to the ground lug beside the heat sink as shown in Fig. 20.*
3. *Feed in a color bar pattern from a color-bar/ pattern generator and turn the BRIGHT control for maximum.*
4. *Supply 120V ac to with variable auto-transformer.*
5. *Turn the POWER SWITCH to ON and set the PICTURE control for maximum position. Confirm that the POWER is automatically turned off just when the voltage on the high tension meter is 32.35 ± 0.25KV by connecting a resistor across R527 and R528 (HV HOLD DOWN circuit operates).*
6. *If necessary, select R527 and R528 (1/6W carbon resistor) and repeat above steps.*
7. *Turn the POWER siwtch to OFF.*

— When a high tension meter is available —

R427, R428 HV REG Adjustment

1. *Confirm that the POWER switch is in OFF position.*
2. *Connect the positive lead of the high tension meter to the HV DC block and the negative lead to the ground lug beside the heat sink as shown in Fig. 1.*
3. *Feed in a color bar pattern from a color-bar/ pattern generator.*
4. *Supply 120V ac to with variable auto-transformer.*
5. *Disconnect the BB-11 connector on the BB board and if necessary, adjust RV701 so that cut off position.*
6. *Turn the POWER SWITCH to ON. Confirm the voltage on the high tension meter is 31.0 ± 0.3KV.*

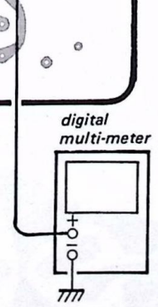

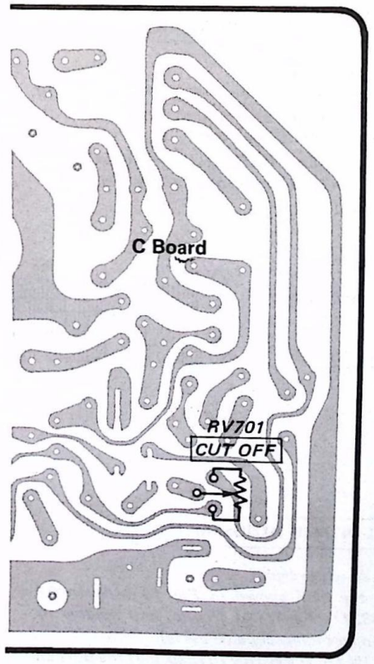

+B MAX CHECK

1. *Supply 130 $^{+2}_{-0}$V ac to with variable auto-transformer.*
2. *Feed in a color bar signal.*
3. *Disconnect the BB-11 connector on the BB board and if necessary, adjust RV701 so that cut off position.*
4. *Confirm the voltage on digital multimeter is less than 117.0V.*

+B MAX CHECK

Replace the IC651, R656, GA board and GB board, confirm +B Max voltage.

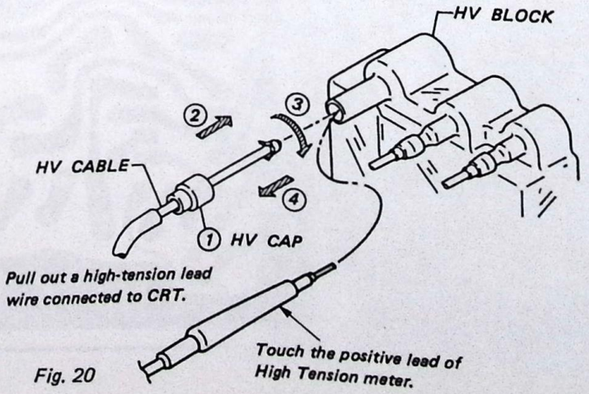

Fig. 20

PJ ADJUSTMENTS

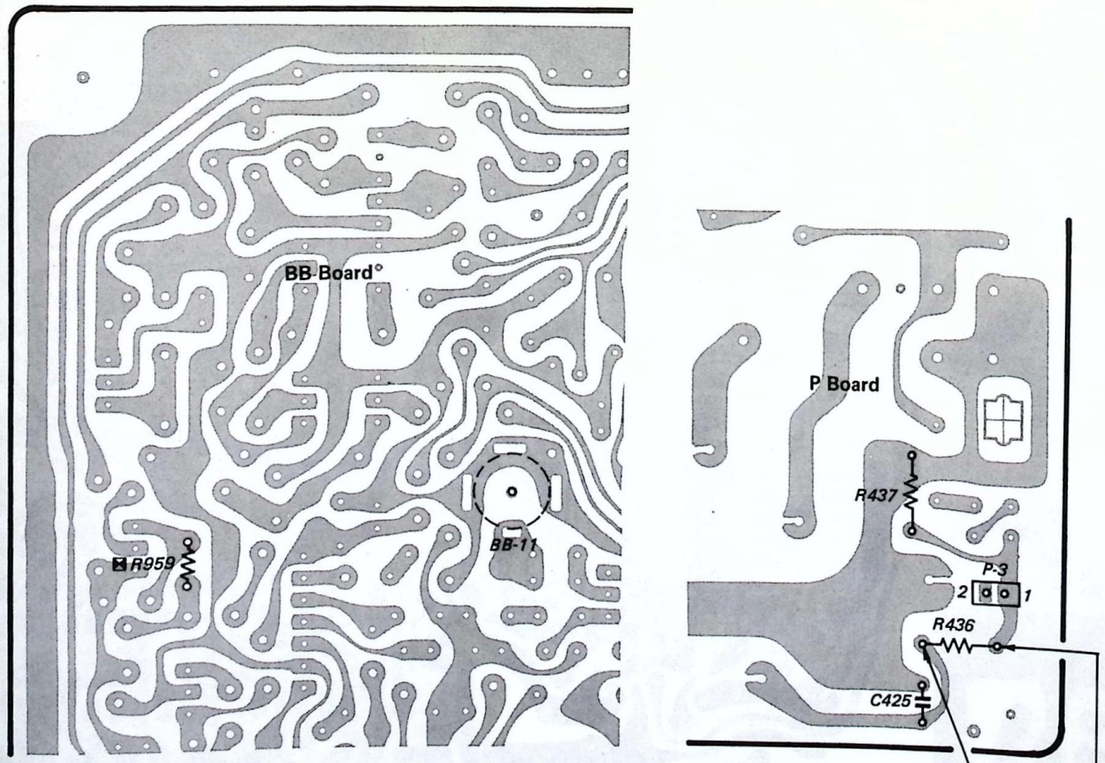

R959 BEAM CURRENT HOLD DOWN ADJUSTMENT

1. *Confirm that the POWER switch is in OFF position.*
2. *Connect a DC ammeter for R436 on P Board shown in the Fig. 21.*
3. *Feed in a color bar pattern from a color-bar/ pattern generator, and short circuit pin (2) and pin (3) of BB-2 connector.*
4. *Supply 120V ac to with variable auto-transformer.*
5. *Turn the POWER switch to ON and confirm that the POWER is automatically turned off just when the ampere on the ammeter is less than 1100μA. (BEAM CURRENT HOLD DOWN circuit operates.)*
6. *If necessary, select R959 (1/6W carbon resistor) and repeat above steps.*
7. *Turn the POWER switch to OFF.*
8. *Disconnect the ammeter.*

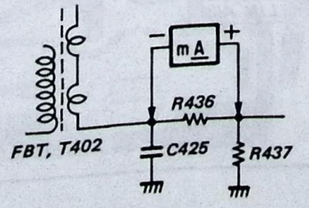

Fig. 21

— When a high tension meter is not available —

R527, R528 HV. HOLD DOWN ADJUSTMENT

1. *Confirm that the POWER switch is in OFF position.*
2. *Make the following network and connect a digital multi-meter as shown in Fig. 22.*

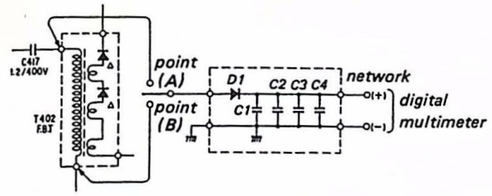

Diode (D1): U05E (8-719-911-55)
Capacitors (C1–C4): 146000pF/2.0KV
Digital multimeter: Capable of measuring the voltage is more than 1000V.

Fig. 22

3. *Feed in a color bar pattern from a color bar pattern generator and set the BRIGHT control for maximum position.*
4. *Turn the POWER SWITCH to ON and set the PICTURE control for maximum position. Confirm that the POWER is automatically, turned off just when the voltage on the digital multimeter is 811 ± 3V dc (differential voltage between point A and B).*
5. *If necessary, select R527 and R528 (1/6W carbon resistor) and repeat above steps.*
6. *Turn the POWER switch to OFF.*
7. *Disconnect the network.*

— When a high tension meter is not available —

R427, R428 HV. REG ADJUSTMENT

1. *Confirm that the POWER switch is in OFF position.*
2. *Make the following network and connect a digital multimeter as shown in Fig. 22.*
3. *Feed in a color bar pattern from a color bar patter generator.*
4. *Turn the POWER switch to ON. Confirm the voltage on the digital multimeter is 782 ± 5V dc (differential voltage between point A and B).*
5. *If necessary, select R427 and R428 (1/6 W carbon resistor) and repeat above steps.*
6. *Turn the POWER switch to OFF.*
7. *Disconnect the network.*

SECTION 5
VIDEO ADJUSTMENT
(Video : FP-60)

TABLE OF CONTENTS

Section	*Title*	*Page*
1.	**CHECKING, ALIGNMENT AND REPLACEMENT AND MECHANICAL SECTION**	5-1
1-1.	REMOVAL OF THE CASE	5-1
1-1-1.	Removal of Case Assembly (Fig. 1-1)	5-1
1-1-2.	Removal of Front Panel (Fig. 1-2)	5-2
1-1-3.	Removal of the Mechanism Chassis	5-2
1-2.	PRECAUTIONS WHEN SERVICING	5-3
1-3.	MECHANICAL OPERATION WITHOUT CASSETTE INSTALLED	5-3
1-3-1.	Completing Threading Without Cassette (This state is called "STOP mode" in this guide.)	5-3
1-3-2.	Setting Playback without Cassette Installed	5-3
1-3-3.	Setting Record Mode without a Cassette	5-3
1-4.	LIST OF SERVICE UNITS AND TOOLS	5-4
2.	**PERIODIC CHECK AND MAINTENANCE**	5-5
2-1.	MAINTENANCE AFTER REPAIR	5-5
2-1-1.	Rotary Head Disc Assembly	5-5
2-1-2.	Cleaning of the Tape Transportation System	5-5
2-1-3.	Cleaning of the Drive System	5-5
2-2.	PERIODIC CHECK ITEMS	5-5
3.	**CHECK, ADJUSTMENT AND REPLACEMENT PROCEDURES**	5-6
3-1.	REPLACEMENT OF VIDEO HEAD DISC ASSEMBLY (Fig. 3-1)	5-6
3-1-1.	Removal of the Rotary Head Disc Assembly	5-6
3-1-2.	Replacement	5-6

TABLE OF CONTENTS

Section	Title	Page
3-2.	VIDEO HEAD DIHEDRAL ADJUSTMENT	5-7
3-3.	REPLACEMENT AND RE-ASSEMBLY OF DRUM ASSEMBLY	5-8
3-3-1.	Replacement of Drum Assembly	5-8
3-3-2.	Motor Clealance Adjustment when Replacing the Drum Assembply	5-9
3-3-3.	Removal of Stator and Rotor when Replacing the Drum (Fig. 3-6)	5-9
3-4.	REPLACEMENT AND ADJUSTMENT OF CAPSTAN DC MOTOR	5-10
3-4-1.	Removing Capstan Motor (Fig. 3-7)	5-10
3-4-2.	Perpendicular Adjustment of Capstan Shaft	5-10
3-5.	REMOVAL OF TENSION PICKUP ASSEMBLY (Fig. 3-9)	5-10
3-6.	REMOVAL OF CASSETTE COMPARTMENT (Fig. 3-10)	5-11
3-7.	REMOVAL OF REEL MOTOR (Fig. 3-11)	5-12
3-8.	THREADING/UNTHREADING ADJUSTMENT	5-12
3-8-1.	Checking cassette Detection Switch Operation	5-12
3-8-2.	Unthreading Cheak	5-12
3-9.	S THREADING RING REPLACEMENT AND ADJUSTMENT	5-13
3-9-1.	Removal of S-Threading Ring	5-13
3-9-2.	Removal of S-Threading Ring Assembly (Fig. 3-16)	5-15
3-9-3.	Checking Slider Stopper Mounting (Fig. 3-17)	5-16
3-9-4.	Replacement of S-Threading Ring (Fig. 3-18)	5-16
3-10.	Checking and Adjustment of Pinch Press Limiter Clearance (Check)	5-17
3-11.	CHECKING AND ADJUSTMENT OF MICROSWITCH POSITION	5-18
3-11-1.	Checking and Adjustment of Threading End Switch (TE Switch) Position	5-18
3-11-2.	Checking and Adjustment of Unthreading End Switch (UTE Switch) Position	5-19
3-11-3.	Forward/Back Tension Measurement	5-20
4.	**TAPE PATH ADJUSTMENT**	5-21
4-1.	TRACKING ADJUSTMENT	5-21
4-1-1.	Preparation	5-21
4-1-2.	Entrance Side Adjustment	5-22
4-1-3.	Exit Side Adjustment	5-24
4-1-4.	Reverse Waveform Confirmation	5-24
4-2.	ADJUSTMENT FOR REMOVAL OR REPLACEMENT OF THE ACE ASSEMBLY	5-25
4-2-1.	Tracking Adjustment	5-25
4-2-2.	Audio Azimuth Peak Adjustment	5-26
4-2-3.	CTL Heard (ACE Assembly) Position Adjustment	5-26
4-2-4.	Audio Head (ACE Assembly) Height Adjustment	5-26
4-3.	ADJUSTMENT FOR REMOVAL OR REPLACEMENT OF THE CAPSTAN MOTOR	5-27
5.	**ELECTRICAL ALIGNMENT**	5-29
5-1.	POWER SUPPLY CHECK (MA-6 Board)	5-31
5-2.	SERVO SYSTEM ALIGNMENT	5-31
5-2-1.	Reel Servo System Alignment	5-31
5-2-2.	Drum Servo System Alignment	5-31
5-2-3.	Capstan Servo System Alignment	5-33
5-3.	VIDEO SYSTEM ALIGNMENT	5-35
5-4.	AUDIO SYSTEM ADJUSTMENT (MC-1 BOARD)	5-41

SECTION 1
CHECKING, ALIGNMENT AND REPLACEMENT OF MECHANICAL SECTION

1-1. REMOVAL OF THE CASE

1-1-1. Removal of Case Assembly (Fig. 1-1)

1) Raise the cassette compartment.
2) Unhook the two cassette compartment cover hooks (A) and pull the cover in the direction of arrow (a) to remove.
3) Remove the four screws (1), then lift the upper case assembly in the direction of arrow (b) to remove.
4) Remove the four screws (2) three screws (3) remove the front panel assembly and B5 holder.

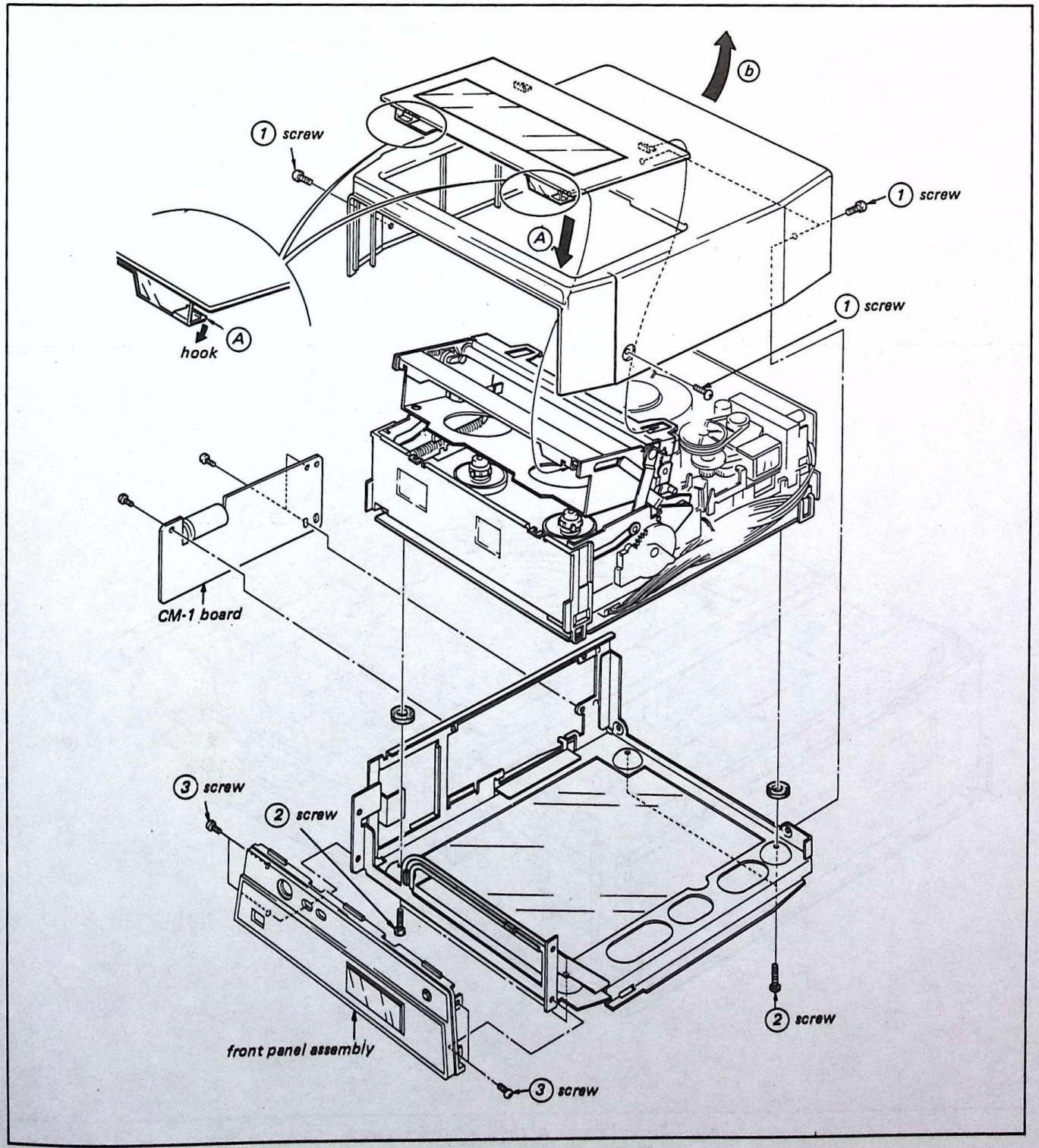

Fig. 1-1. Removal of panel assembly

1-1-2. Removal of Front Panel (Fig. 1-2)

1) Remove the four screws (1) and remove the front panel.

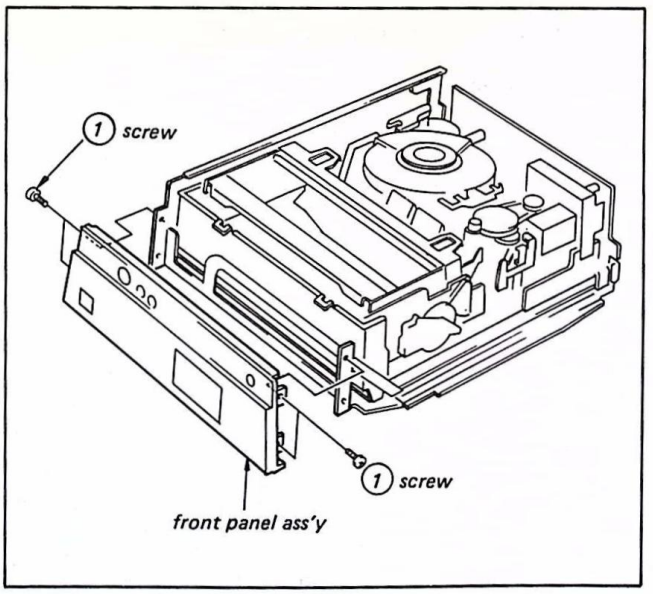

Fig. 1-2 Removal of front panel

1-1-3. Removal of the Mechanism Chassis

1) Remove the front panel (See 1-1-2).
2) Remove the two screws (1) and open the MC-1 board.

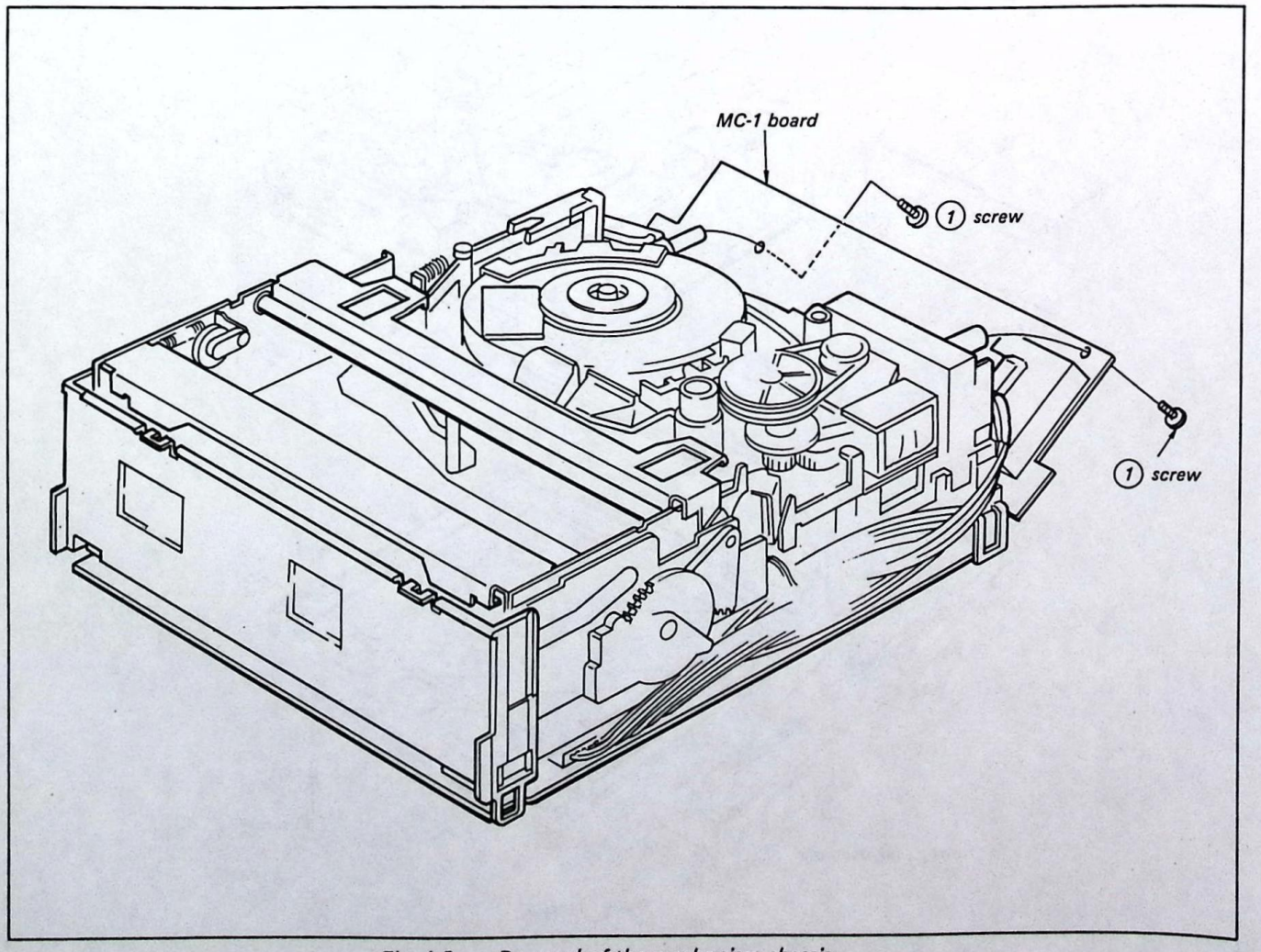

Fig. 1-3. Removal of the mechanism chassis

1-2. PRECAUTIONS WHEN SERVICING

1. Attention should be paid to the positioning of the set when working with the case removed and circuit boards dismounted.
2. Do not use alignment tapes other than KR5-1M.

1-3. MECHANICAL OPERATION WITHOUT CASSETTE INSTALLED

1-3-1. Completing Threading Without Cassette (This state is called "STOP mode" in this guide.)

1) Remove the front panel (See 1-1-2).
2) Remove the one screw (1), and press SW17 on the TS-43 board.

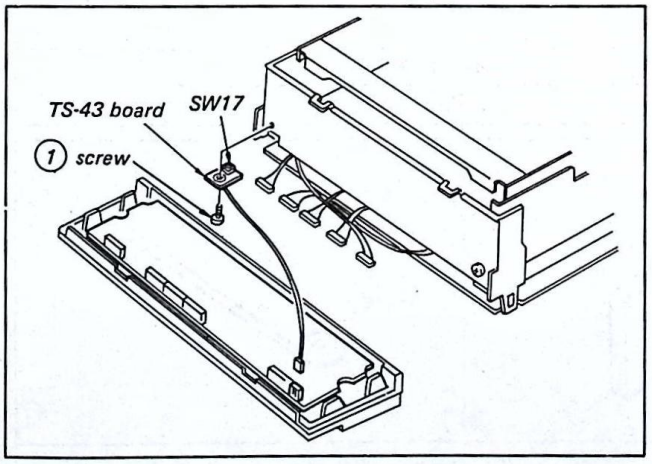

Fig. 1-4. Threading switch

1-3-2. Setting Playback Without Cassette Installed

Press the playback button after setting the STOP mode in step 1-3-1.

1-3-3. Setting Record Mode without a Cassette

1) Thread as explained in 1-3-1 and press the record proof switch as shown in Fig. 1-5.
2) Press the REC button while continuously holding down the record proof switch.

Caution: Fast-forward and rewind are not possible, because of system control

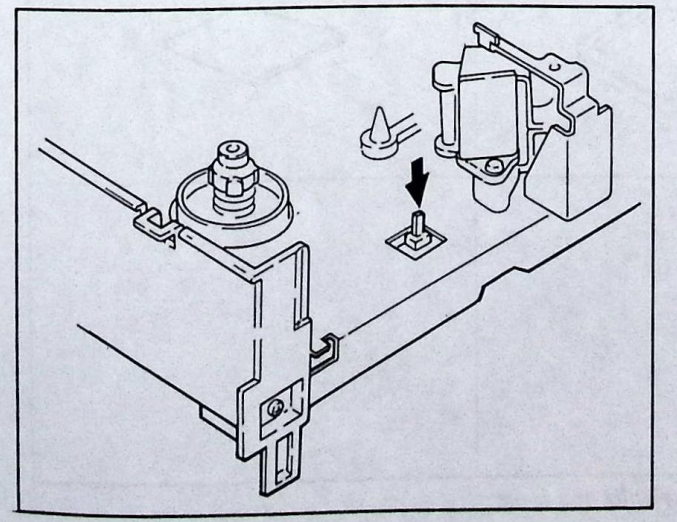

Fig. 1-5. Record proof switch

1-4. LIST OF SERVICE UNITS AND TOOLS

Ref. No.	Name	Cord No.	Fixture No.
J-1	Forward-Back Tension Measurement Tape	J-6080-003-C	SL-0003C
J-2	Parallel Plate	J-6086-750-A	SL-0657
J-3	Small Adj. Mirror Spare Mirror	J-6080-029-A J-6080-030-1	SL-5052
J-4	Alignment Tape	8-969-995-71	KR5-1M
J-5	Cleaning Fluid	Y-2031-001-0	
J-6	Thickness Gauge	9-911-053-00	
J-7	Cleaning Piece	Z-034-697-00	
J-8	Head Demagnetizer		
J-9	Lapping Tape	8-888-004-00	
J-10	Dihedral Adj. Screw	J-6080-013-1	SL-0013

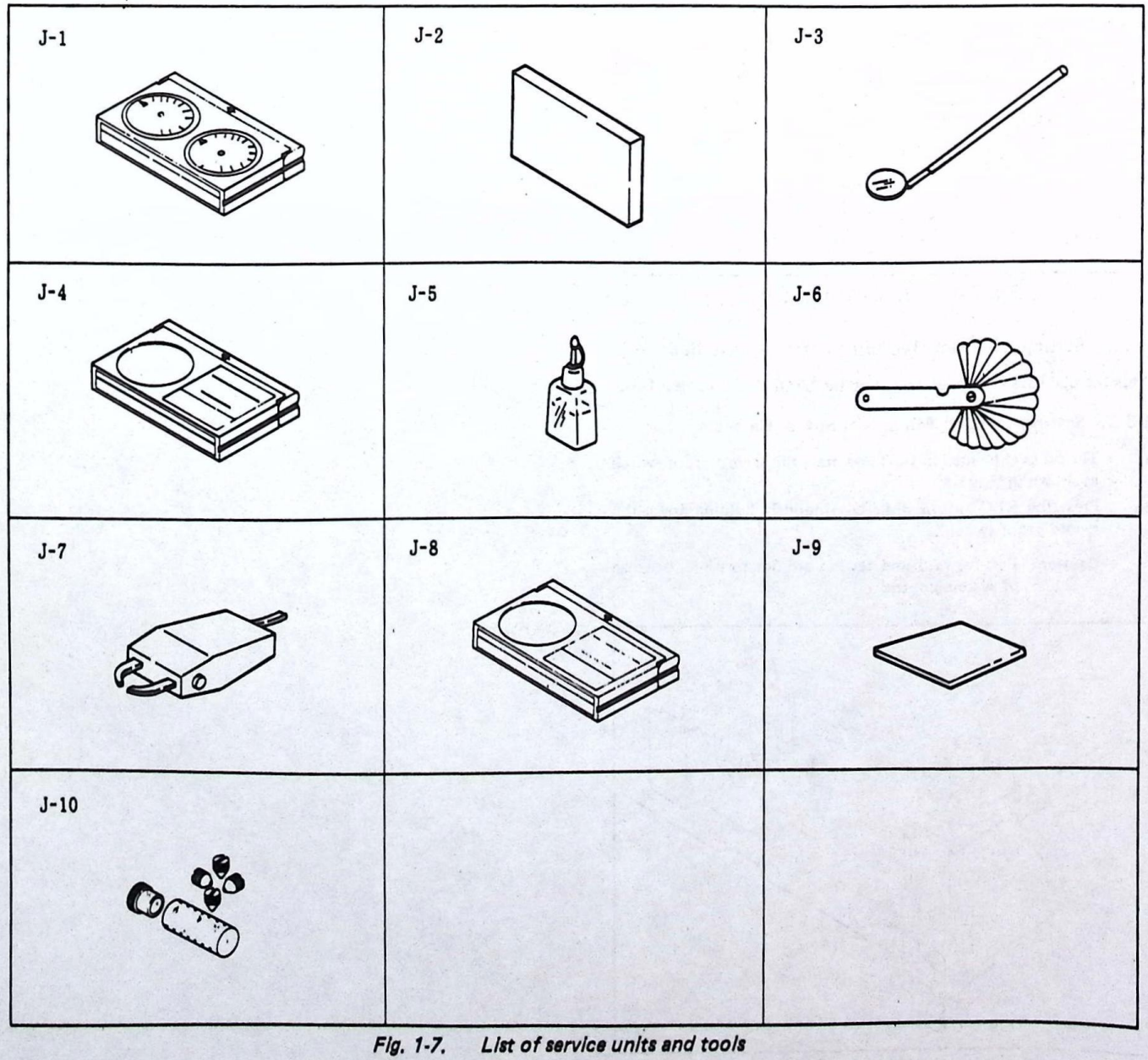

Fig. 1-7. List of service units and tools

SECTION 2
PERIODIC CHECK AND MAINTENANCE

The following maintenance and periodic checks are recommended to ensure optimum machine function and performance and to prolong machine and tape life.

2-1. MAINTENANCE AFTER REPAIR

Carry out maintenance work for the following items after repairing the machine regardless of the period of use.

2-1-1. Rotary Head Disc Assembly

1) Place a piece of chamois (tool Ref. No. J9) soaked in cleaning fluid (tool Ref. No. J5) lightly against the rotary drum assembly and clean the rotary head disc assembly by slowly rotating it by hand. (Important-Do not clean by rotating with the motor on.)

2) Do not clean the head tip by moving the chamois in a vertical direction. This may damage the head tip.

2-1-2. Cleaning of the Tape Transportation System

Clean the tape contact surfaces, such as the tape guide, drum assembly surfaces, capstan, and pinch roller using cleaning piece etc. soaked in cleaning fluid.

2-1-3. Cleaning of the Drive System

Clean the driving elements (threading motor belt, reel base surfaces, etc.) using a cloth soaked in cleaning fluid.

2-2. PERIODIC CHECK ITEMS

Carry out maintenance checks for the following items depending on the duration of use.

	Maintenance & Check	Replacement Part No.	Operating Hours (H) 500	1,000	1,500	2,000	2,500	3,000	3,500	4,000	4,500	5,000	Remarks
Tape Trans-Portation System	Cleaning of tape transportation system		○	○	○	○	○	○	○	○	○	○	This cleaning must be done whenever a repair is made.
	Cleaning and degaussing of ACE ass'y		○	○	○	○	○	○	○	○	○	○	
	Cleaning & degaussing of video disk ass'y		○	○	○	○	○	○	○	○	○	○	The life of the head varies, depending on operational conditions and method.
Driving System	Replacement of threading DC motor belt		○	○	○	○	○	○	○	★	○	○	• This cleaning must be done whenever a repair is made. • Replacement must be done depending on operating hours on the table, or every two years.
	Cleaning of iron core and opening of solenoid		–	–	–	○	–	–	–	○	–	–	Wipe iron core and opening of solenoid with dry cloth.
Performance Confirmation	Abnormal sound		☆	☆	☆	☆	☆	☆	☆	☆	☆	☆	Adjust or replace the section which causes abnormal sound.
	Measurement of FWD back tension		–	☆	–	☆	–	☆	–	☆	–	☆	Confirmation must be made according to section Specified value: 45 ~ 48 g·cm (When measured with torque cassette tape)
	Confirmation of brake system		–	☆	–	☆	–	☆	–	☆	–	☆	Confirmation must be made according to section
	Confirmation of record & playback functions		☆	☆	☆	☆	☆	☆	☆	☆	☆	☆	Perform the confirmation whenever repair is made.

○ Cleaning ★ Replacement ☆ Confirmation

SECTION 3
CHECK, ADJUSTMENT AND REPLACEMENT PROCEDURES

3-1. REPLACEMENT OF VIDEO HEAD DISC ASSEMBLY (Fig. 3-1)

3-1-1. Removal of the Rotary Head Disc Assembly

1) Remove the dynamic damper mounting screws (1) and remove the dynamic damper.
2) Remove screw (2) and the PTC heater cover.
3) Pull off the drum support.
4) Unscrew hexagonal socket screws (3) using an Allen wrench.

   Note: Remove the upper drum while rotating it without moving the adjust plate. Be very careful not to move the adjust plate, otherwise the tape path will be affected.
5) Unsolder the rotary head disc circuit board (four red-and-white lead wires).
6) Unscrew the two hexagonal socket screws (4) and remove the rotary head discassembly.

   Note: Be very careful not to touch the head tip, or touch it against anything.

3-1-2. Replacement

1) Position the rotary head disc paying attention to the direction of the red and white lead wires.
2) Tighten the screws (4) and solder the lead wires.

   Note: Solder securely, being careful not to break the lead wires.
3) Be careful not to move the adjust plate, as when removing the upper drum. Lightly tighten the screws (3), then securely tighten the screws (3), while pressing the upper drum down.

   Caution: Be careful not to touch the upper drum or the head tip.

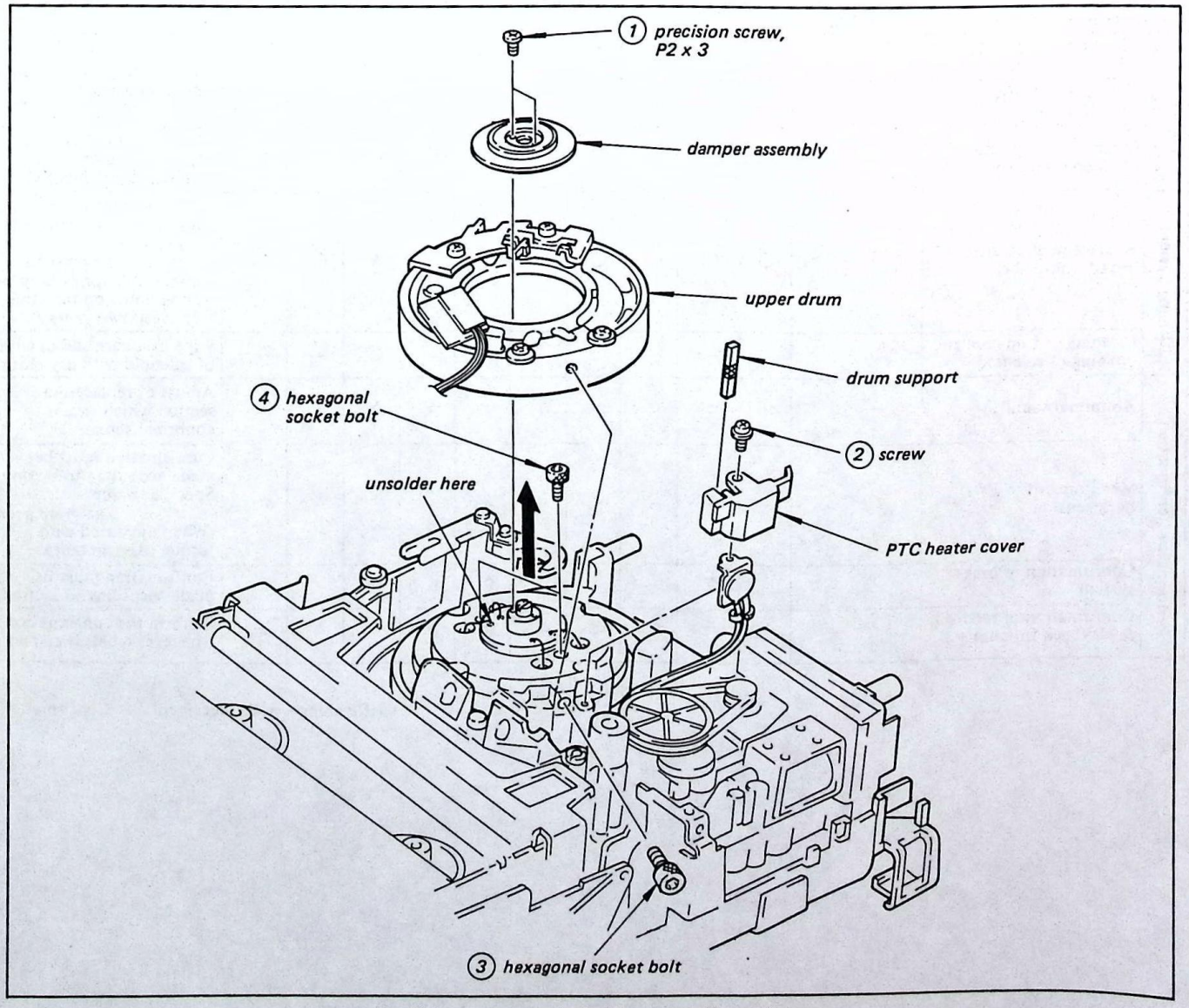

Fig. 3-1. Removal of video head disc ass'y

3-2. VIDEO HEAD DIHEDRAL ADJUSTMENT

Generally this adjustment is not necessary except after video head disc replacement. (Video head discs for repair and replacement are precision adjusted using a microscope, and there is virtually never a need for readjustment.)
When determining the appropriate video head angle, play back an alignment tape. Make sure the tracking control knob is set at the center click position. When the check is made at a position other than the center click (tracking is off), the pictures will be played back as if the angle is wrong even if it is correct.
Be sure the ACE assembly position adjustment is completed (refer to "Tape Path Adjustment") before making this adjustment.

[Checking Method]

Play back the βII monoscope signal section of the alignment tape (KR5-1M) after setting the tracking control knob at the center click position. Verify that only one monoscope perpendicular line is played back immediately underneath the switching pulse, and not two lines.
If only one perpendicular line can be seen, the angle is correct, and no adjustment is needed.
If there are two, adjust as follows.

[Adjustment Procedure]

1. As shown in Fig. 3-2, screw in the two angle adjustment screws (Jig Ref. No. J-10) so that the lead wires from the video head are on the same level as the red adjusting screw hole and the top of the adjusting screw hole, and the top of the adjusting screw is on the same level as the top of the video head disc.
   (If not screwed in sufficiently, the heads of the adjustment screws hit the upper drum, and the video head disc no longer rotates. Conversely, if they are screwed in too far, the head base moves, and the angle of the video head shifts considerably.)

   Caution: The white lead wire is a reference wire and should never be moved.

2. Screw in either one of the two adjustment screws until it feels tight. Additional tightening beyond this position moves the video head and so the angle can be adjusted.

3. Play back the βII monoscope signal section of the alignment tape (KR5-1M) and verify the angle. If the angle of the perpendicular line is larger than before adjustment, screw the adjustment screw counterclockwise to loosen and adjust the screw on the other side.

4. After adjusting, unscrew and check again.

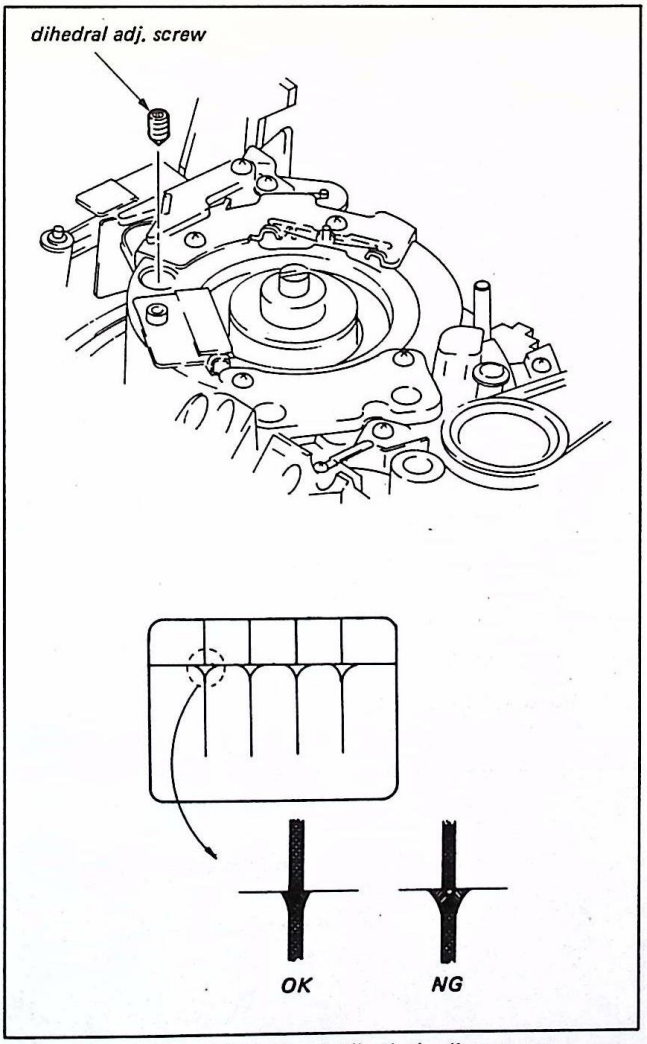

Fig. 3-2. Video head dihedral adjustment

3-3. REPLACEMENT AND RE-ASSEMBLY OF DRUM ASSEMBLY

3-3-1. Replacement of Drum Assembly

1. Remove the mechanism chassis from the circuit board. (Refer to 1-1-3).
2. Measure and record the two gaps between the upper drum tape holding section and adjust plate (Ⓐ in Fig. 3-3). (Do not forget to do this, as the adjust plate mounting position affects the tape path.)
3. Unscrew the screws ① shown in Fig. 3-4 and remove the tape guide ground plate and adjust plates 2 and 3-1.
4. Unfasten dew sensor bolt ② and remove the dew sensor.
5. Unscrew screw ③ and remove the PTC heater cover and PTC heater from the drum body.
6. Remove the connector, ground terminal, and three drum mounting screws from the rear of the chassis and remove the drum assembly body.
7. Re-assemble the parts in reverse order.
8. Adjust according to "Tape Path Adjustment" after replacing the drum.

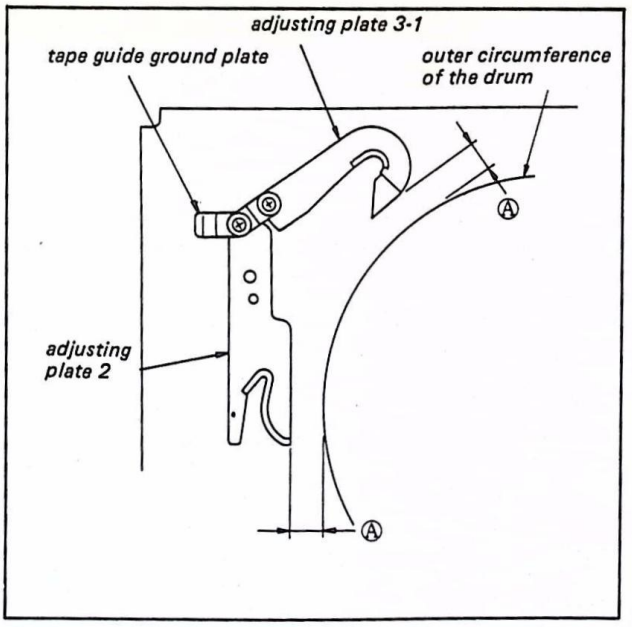

Fig. 3-3

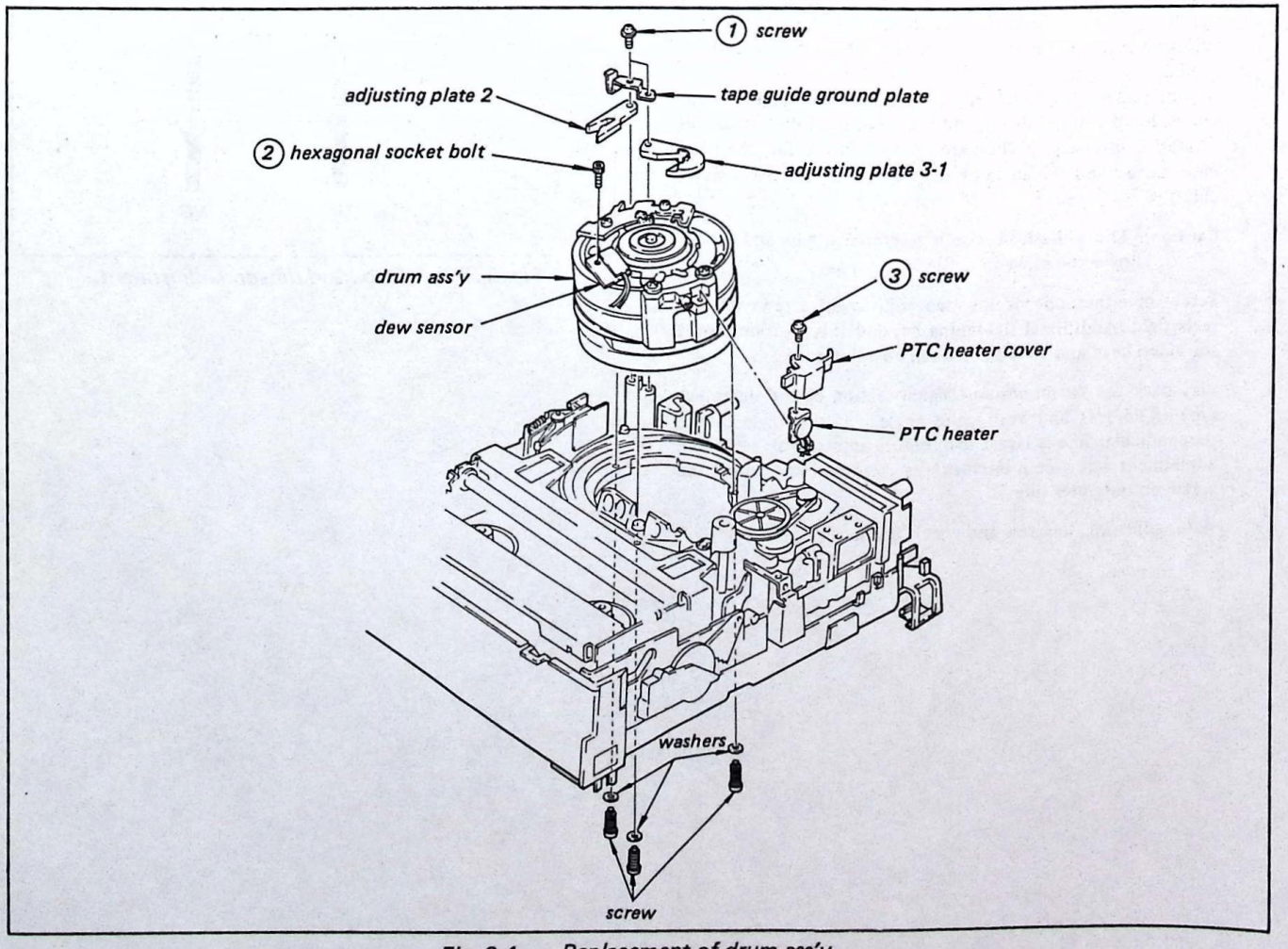

Fig. 3-4. Replacement of drum ass'y

3-3-2. Motor Clearance Adjustment when Replacing the Drum Assembly

After replacing the drum assembly, the clearance between the motor rotor and coil must be adjusted to 0.3 – 0.6 mm (See Fig. 3-5).

[Procedure]

1) When reassembling the drum, use the removed spacers to reassembly, and use the clearance gauge (one side 0.3 mm, the other 0.6 mm) included with the repair drum to make sure that the 0.3 mm side can be inserted between the rotor and coil, and that the 0.6 mm can not be inserted.

2) If the above is not satisfied, dispose of the spacers and use a combination of the included spacers (0.3 mm x 4) to adjust for the correct clearance.

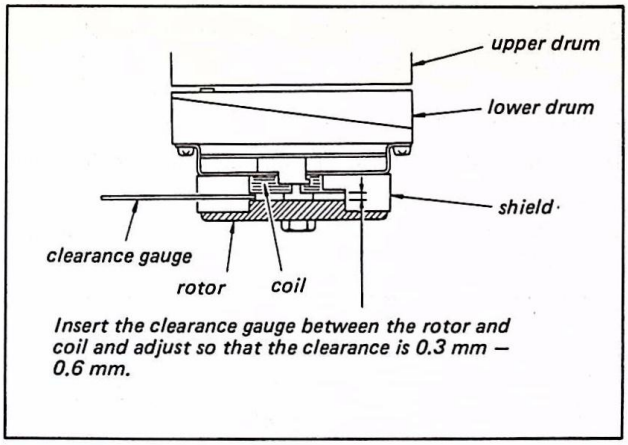

Fig. 3-5. Clearance Check

3-3-3. Removal of Stator and Rotor when Replacing the Drum (Fig. 3-6)

1) Remove nut (1) and washer (2).

2) Remove the rotor (3) from the stator (4).

3) Remove the two screws (5) and remove the stator from the body of the drum.

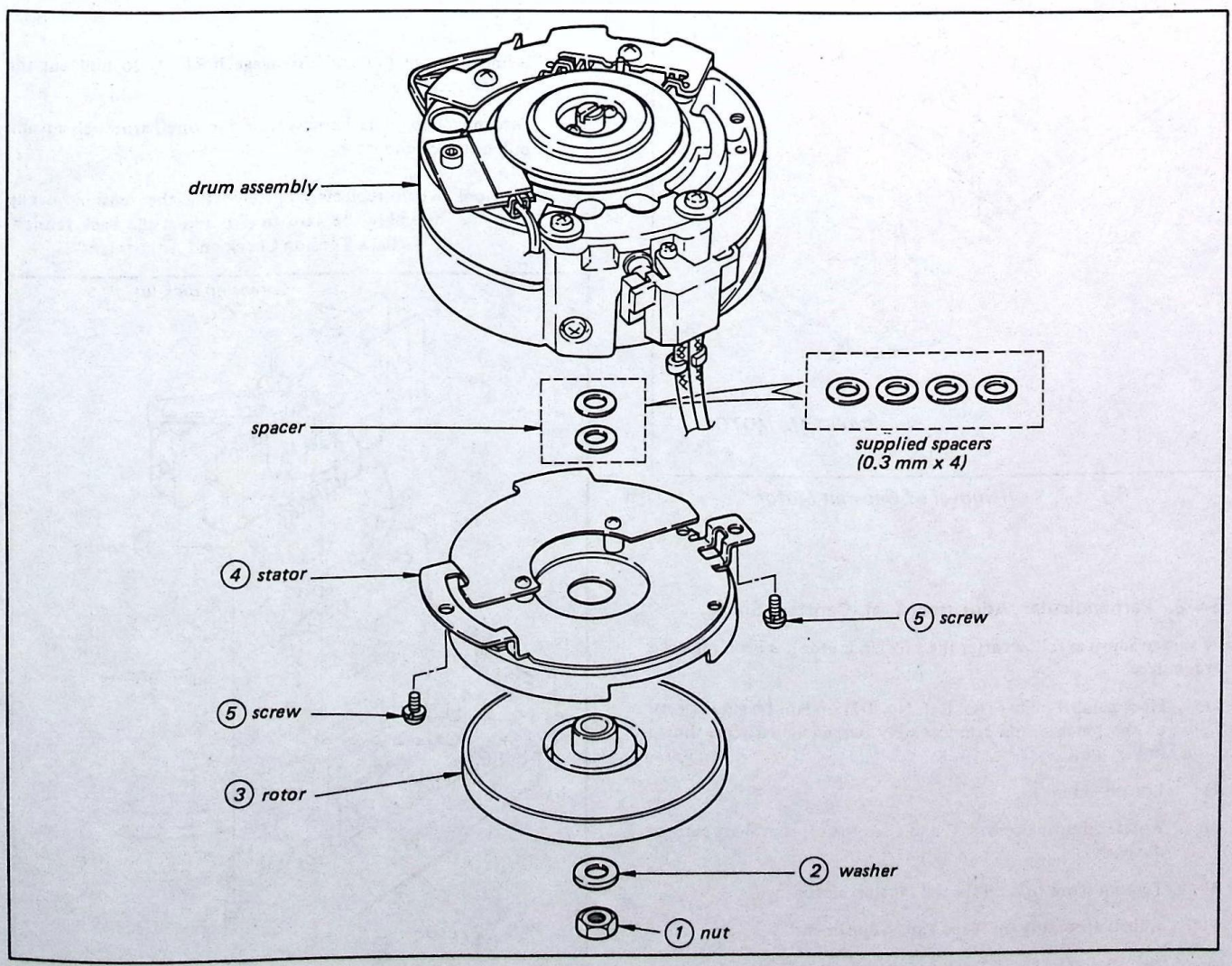

Fig. 3-6. Removal of Stator and Rotor when Replacing Drum

3-4. REPLACEMENT AND ADJUSTMENT OF CAPSTAN DC MOTOR

3-4-1. Removing Capstan Motor (Fig. 3-7)

1) Remove the mechanism chassis from the circuit board. (Refer to 1-1-3)

2) Unscrew screws ①, ②, and ③ and remove the capstan motor from the rear of the mechanism chassis.

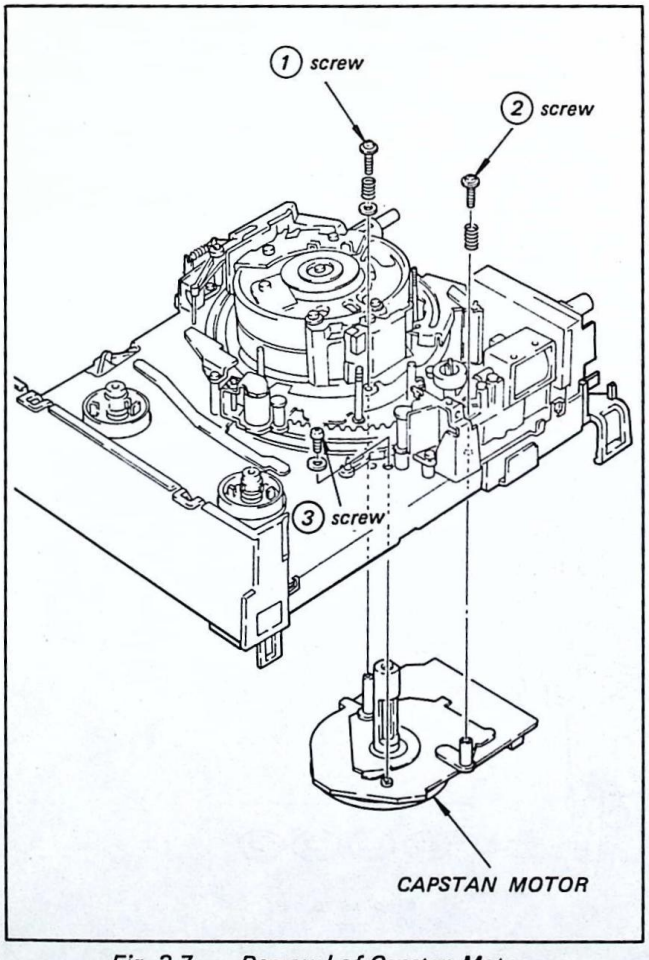

Fig. 3-7. Removal of Capstan Motor

3-4-2. Perpendicular Adjustment of Capstan Shaft

Be sure to adjust as follows after the capstan motor has been replaced or removed:

1) Place parallel plate (Tool Ref. No. J-2) on No. 10 guide sleeve of the pinch crimp arm assembly perpendicularly, as shown in Fig. 3-6.

2) Loosen Screw Ⓑ.

3) Rotate adjusting screw Ⓐ and align the capstan shaft perpendicularly.

4) Tighten screw Ⓑ and fix the capstan motor.

5) Adjust according to "Tape Path Adjustment"

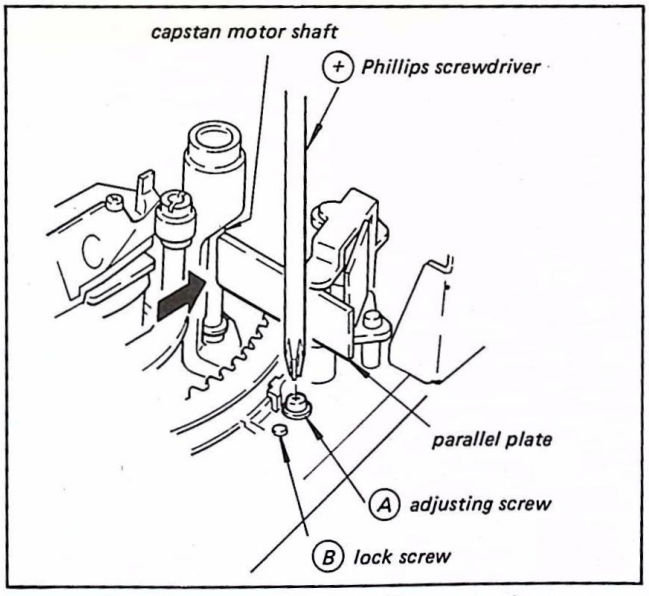

Fig. 3-8. Perpardicular adjustment of capstan motor shaft

3-5. REMOVAL OF TENSION PICKUP ASSEMBLY (Fig. 3-9)

1. Remove spring ① and disengage hook ② to pull out the tension pickup assembly.

2. Disconnect the wire harness from the wire harness clamp and pull out the connector.

Caution: When replacing or removing the tension pickup assembly, be sure to also adjust the back tension. See "Back Tension Check and Adjustment".

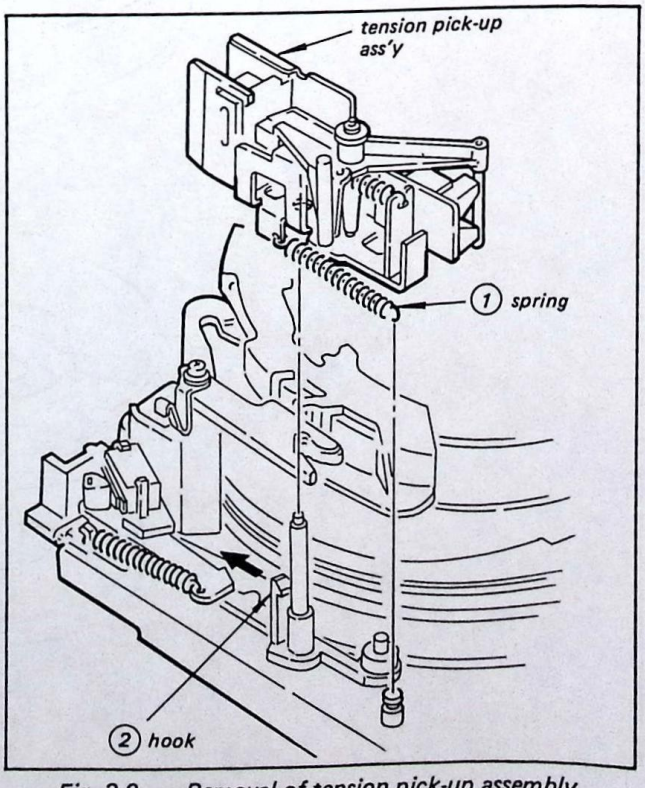

Fig. 3-9. Removal of tension pick-up assembly

3-6. REMOVAL OF CASSETTE COMPARTMENT

(Fig. 3-10)

1. Unthread and lift up the cassette compartment.
2. Unscrew four screws (1) and remove the cassette compartment by lifting it up.

   Caution: When removing the cassette compartment be careful not to hook it on the tension pickup.

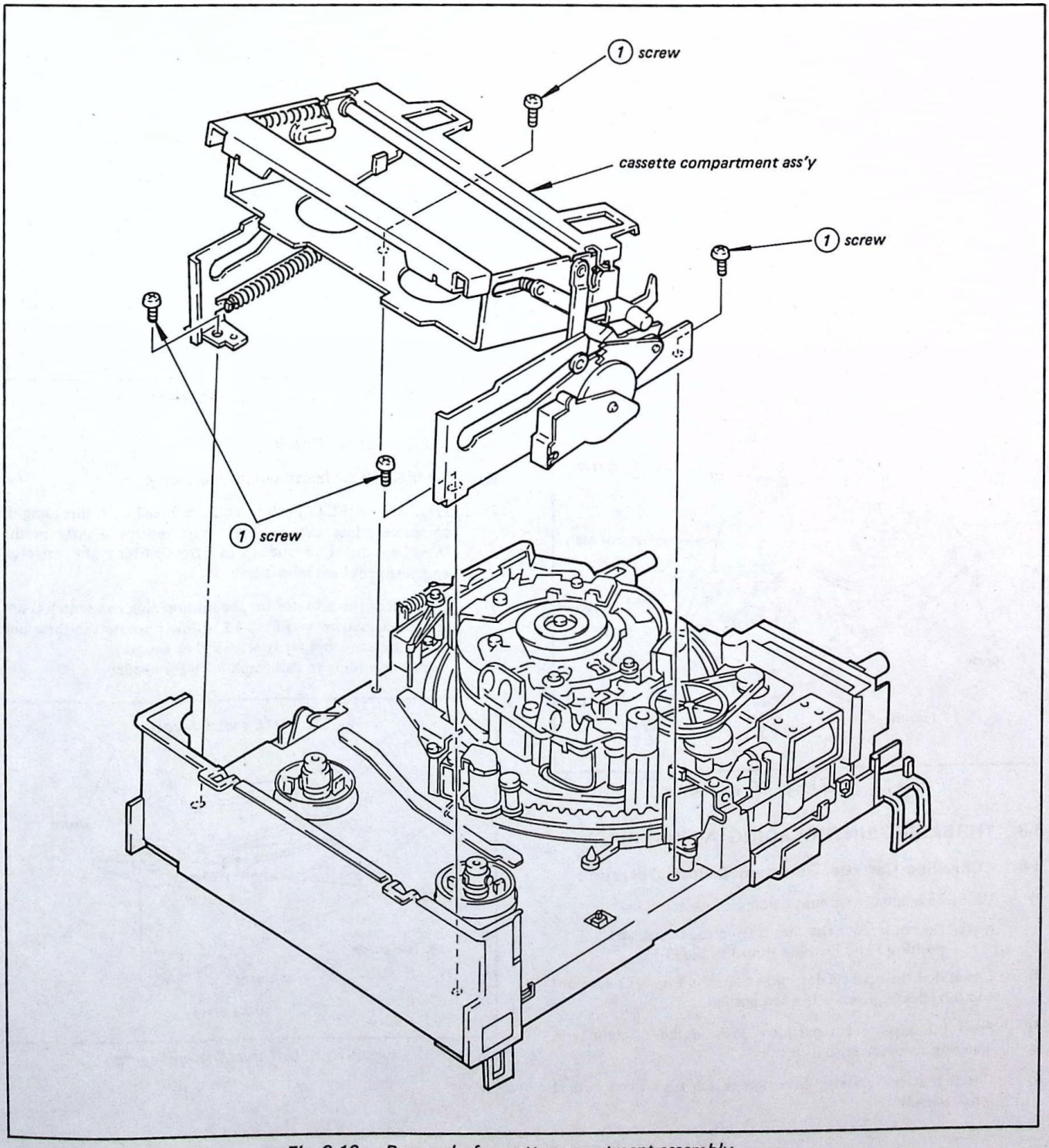

Fig. 3-10. Removal of cassett compartment assembly

3-7. REMOVAL OF REEL MOTOR (Fig. 3-11)

1. Remove the mechanism chassis from the circuit board. (Refer to Paragraph 1-1-3)
2. Unscrew the five mounting screws (1) on the rear of the chassis and remove the reel motor body.

   Note: The rotor section can be removed by pulling it straight up.

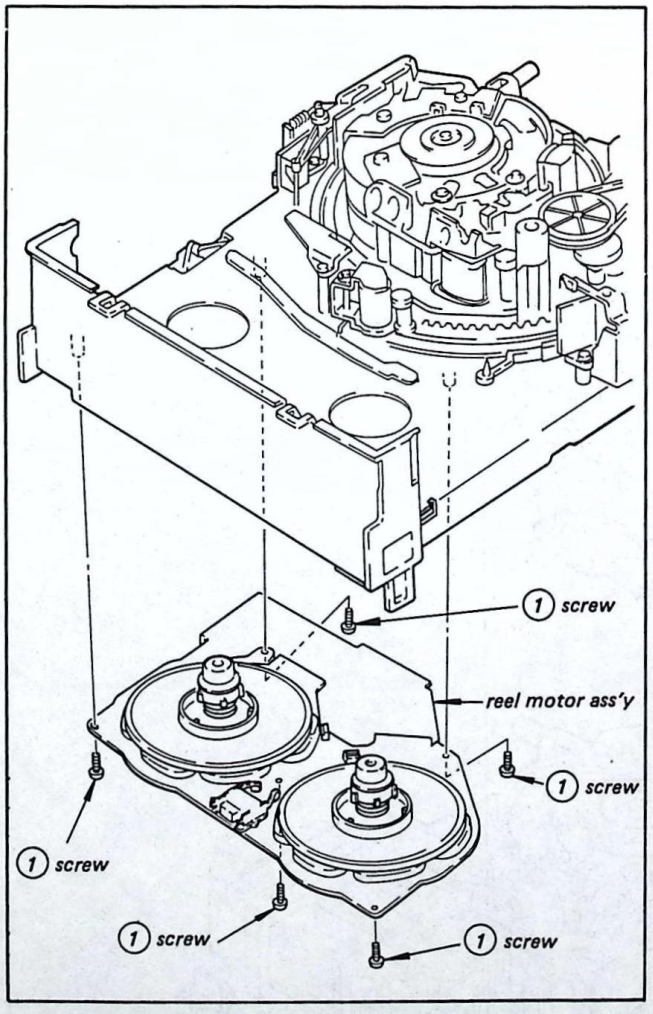

Fig. 3-11. Removal of reel motor

3-8. THREADING/UNTHREADING ADJUSTMENT

3-8-1. Checking Cassette Detection Switch Operation

1) Unthread manually without loading a cassette.

   Note: Do not remove the chassis from the board, and position FD-3 board as shown in Fig. 3-12.

2) Check that the cassette detection switch in Fig. 3-12 does not trip (no click is generated) when pushed.
3) Press the cassette compartment lock in the diagram with blade-tip screwdriver to lock it.
4) Check that the cassette detection switch trips when pushed (click sound).
5) Push the release slide plate of the cassette compartment lock in the direction of arrow (A) and push the lock lever assembly in the same direction to return it to the previous state.

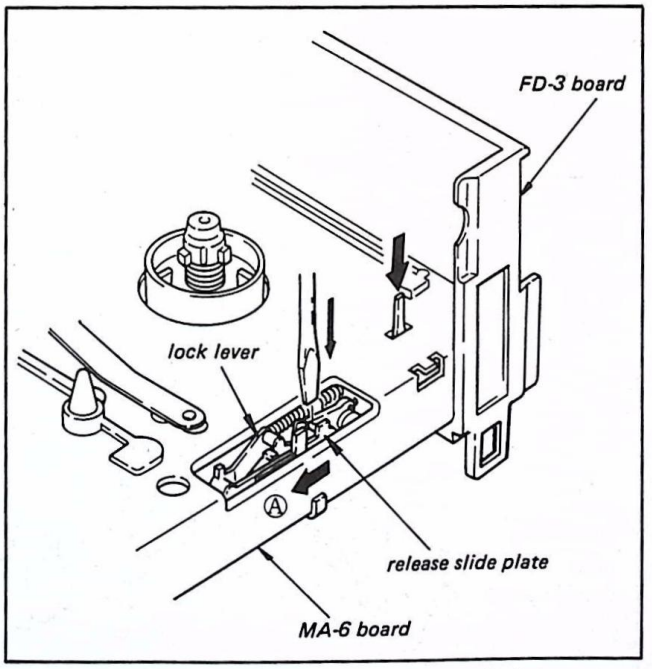

Fig. 3-12. Cassette compartment lock

3-8-2. Unthreading Check

1) Set in STOP mode without loading a cassette.
2) Press the EJECT button and unthread. (Unthreading is complete when the T slider shaft returns slightly in the threading direction and stops after pushing the cassette-compartment lock release lever.)
3) Check that the actuator for the unthreading end switch is not tripped as shown in Fig. 3-13. (Slowly rotate the threading motor by hand and verify with a click sound.)
   Adjust according to Paragraph 3-11-2 if needed.

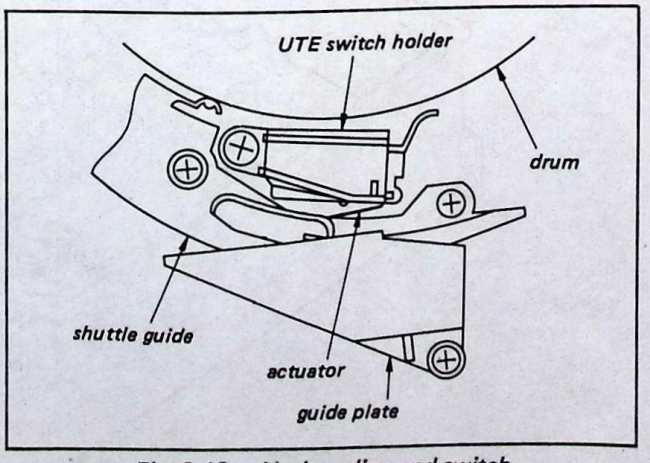

Fig. 3-13. Unthreading end switch

3-9. S THREADING RING REPLACEMENT AND ADJUSTMENT

3-9-1. Removal of S-Threading Ring

Remove ACE Assembly, FE Head, and Unthreading Motor (Fig. 3-14)

1) Unscrew the Phillips head continuous-thread stepped screw ①.

2) Remove the No. 6 guide nut ②, flange ③, spacer ④, and compression coil spring ⑤.

3) Remove the two guide adjusting nuts ⑥ and remove the ACE assembly and FE head.

Caution: ACE assembly and FE head are connected by a lead. Be careful when removing them. The compression coil spring underneath the ACE assembly does not have to be removed. However, be careful not to lose it.

4) Unscrew the two screws ⑦ and pull up the threading motor assembly to remove.

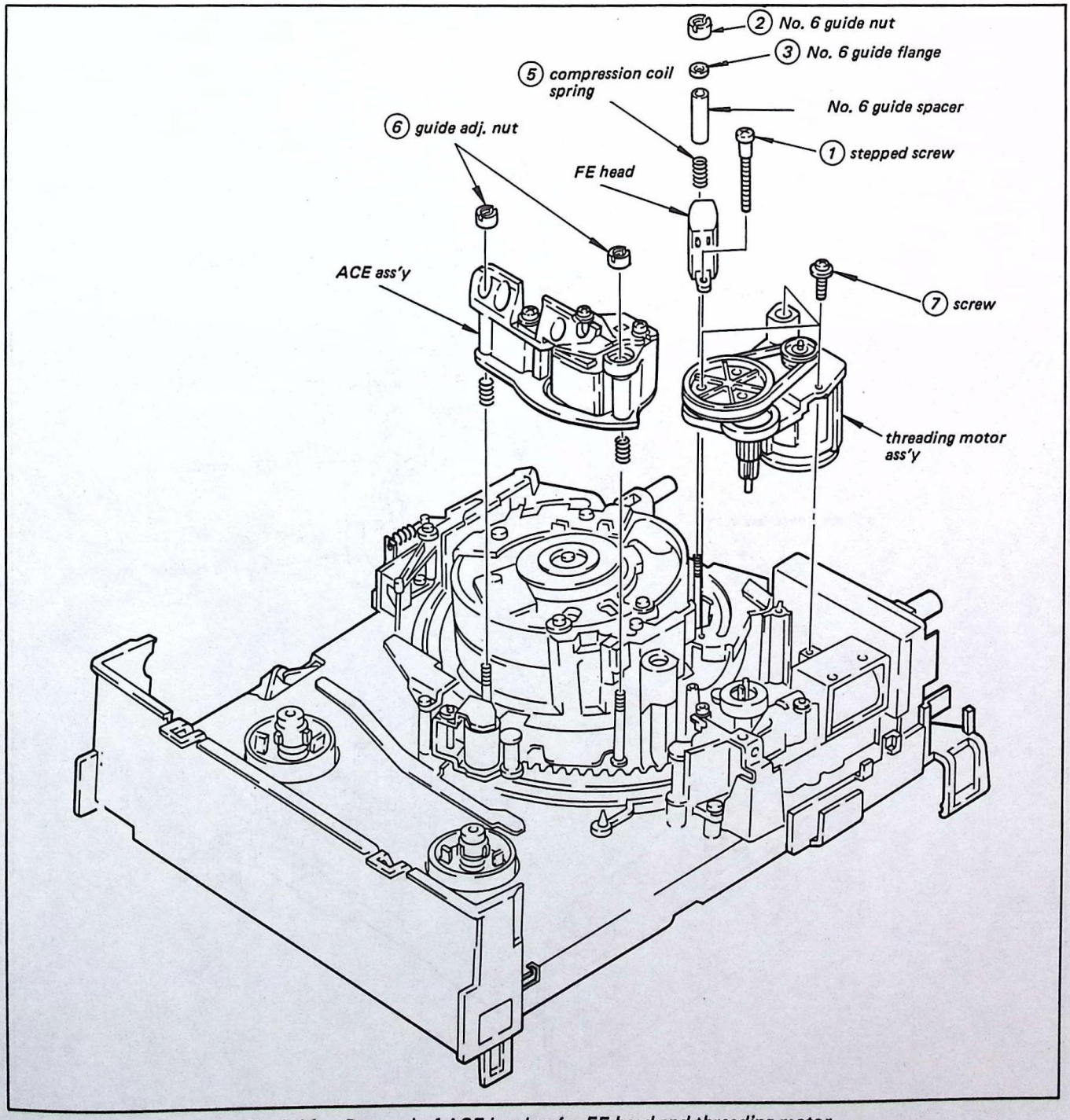

Fig. 3-14. Removal of ACE head ass'y, FE head and threading motor

Removal of Other Parts (Fig. 3-15)

1) Measure the gap between the upper drum and adjust the plate as for replacement of the drum assembly. (Fig. 3-3)

2) Unscrew the screws (1) and remove the tape guide ground plate (2) and adjust plate (3).

3) Unscrew the two screws (4) and remove the holder assembly (5).

4) Unscrew screw (6) and remove the guide plate (7).

5) Unscrew the two screws (8), five screws (9), and screws (10), to remove the shuttle guide I (11) and II (12), as well as the slant base assembly (13).

6) Unscrew screw (14) and remove the pin recliner (15).

Caution: When the guide plate is removed, do not thread or unthread with the shuttle guide mounted.

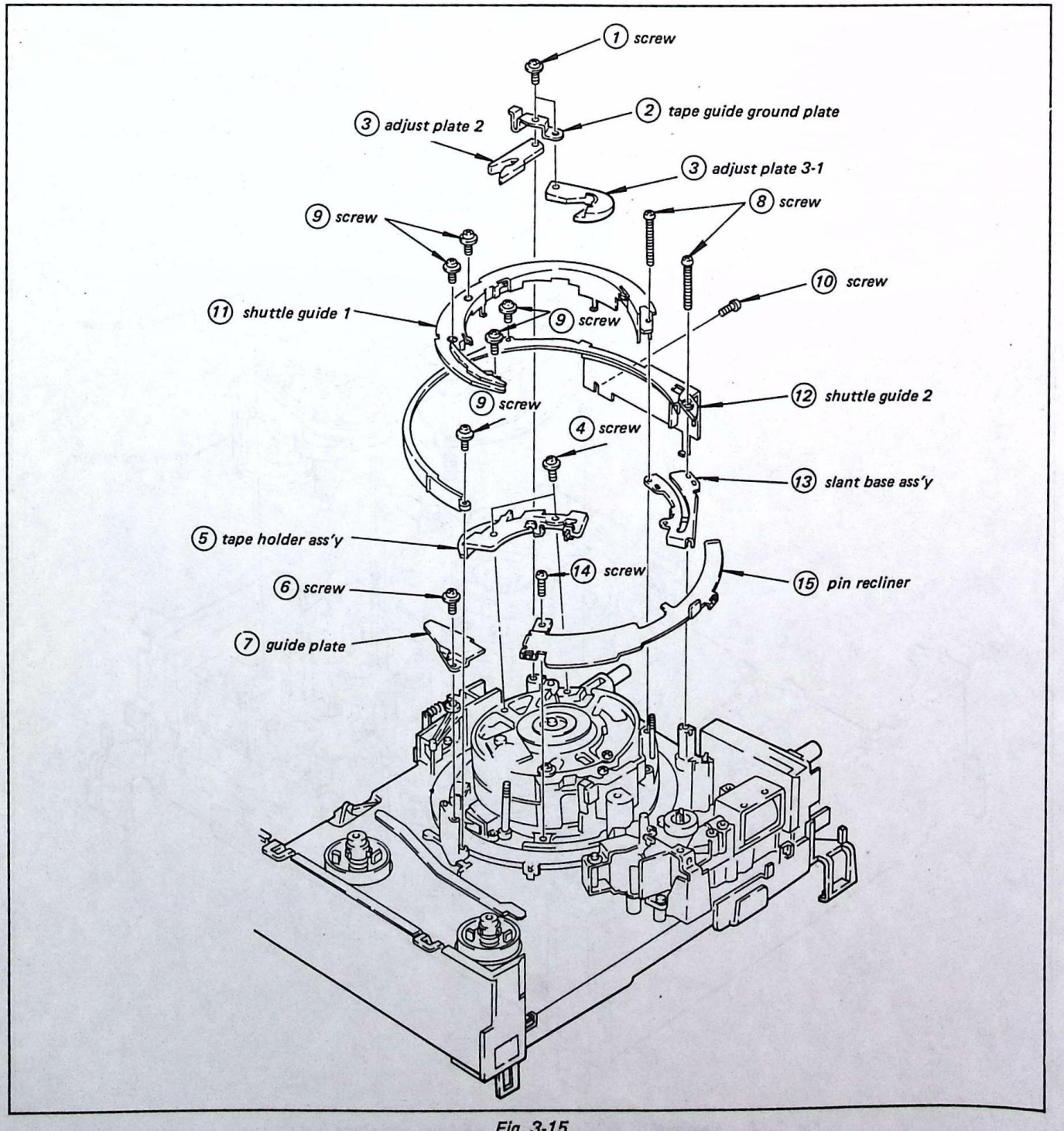

Fig. 3-15

3-9-2. Removal of S-Threading Ring Assembly

(Fig. 3-16)

1) Set up so that drum ass'y removal preparations are completed (3-3).

2) Remove the spring of the lock arm assembly. (Refer to Paragraph 3-12-1, Fig. 3-22)

3) Remove stop washer (1) and ring roller β (2) and ring roller (3).

4) Remove the UTE switch subassembly. (Refer to Paragraph 3-11-2, Fig. 3-26)

5) Unscrew screw (4) and remove the ring roller adjust plate (5) and ring roller (6).

6) Remove the S-threading ring (7).

Caution: Do not use the same washer twice.

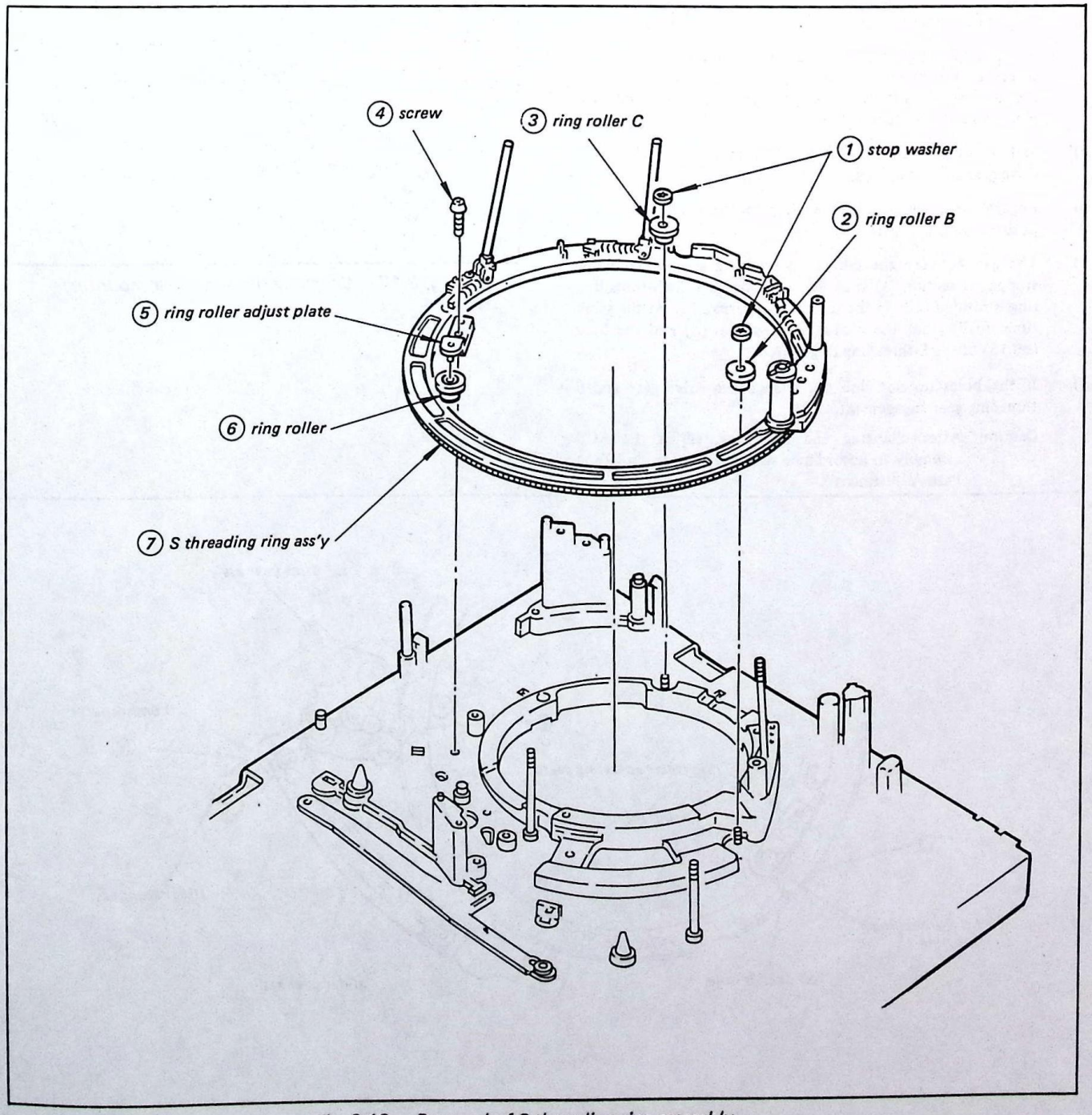

Fig. 3-16. Removal of S-threading ring assembly

3-9-3. Checking Slider Stopper Mounting (Fig. 3-17)

1) Check that the drive gear is engaged.

2) Loosen screw ①, insert a spacer (t = 0.2) between the slider gear and slider stopper, then tighten screw ① while pushing in the directions of arrows Ⓐ and Ⓑ.

Caution: Make sure to push it in the direction Ⓐ to eliminate any backlash. The slider stopper rotates in the direction of arrow ⓐ when screw ① is tightened. Therefore, tighten the screw while holding it with blade-tip screwdriver.

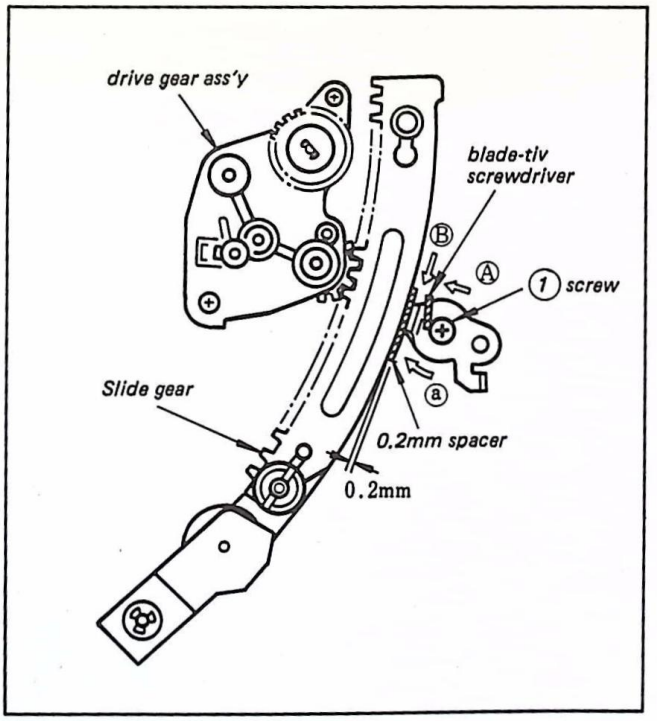

Fig. 3-17. Checking slider stopper mounting

3-9-4. Replacement of S-Threading Ring (Fig. 3-18)

1) Mount the S-threading ring.

2) Insert a spacer (t = 0.5) and set the slider to the position where unthreading is complete.
(In the diagram, the slider stopper and slider gear come into contact at Ⓐ through the spacer.)

3) Match up the notch on the S-threading ring and the tab on the drive gear as shown at Ⓑ in the diagram.

4) Engage the drive gear, S-threading ring, and slider gear, and position on the chassis.

5) The gap between the tab on the slider gear and the slider stopper at section Ⓐ is about 0.5 mm when the S-threading ring is rotated fully in the direction of arrow ⓐ. At the same time, verify that the chassis hole (ϕ3) at Ⓒ and the hole (ϕ0.15) of the S-threading ring match.

6) If the holes do not line up, change the drive gear and S threading gear engagement.

Caution: After changing and mounting, adjust the ACE assembly in accordance with the section on "Tape Path Adjustment".

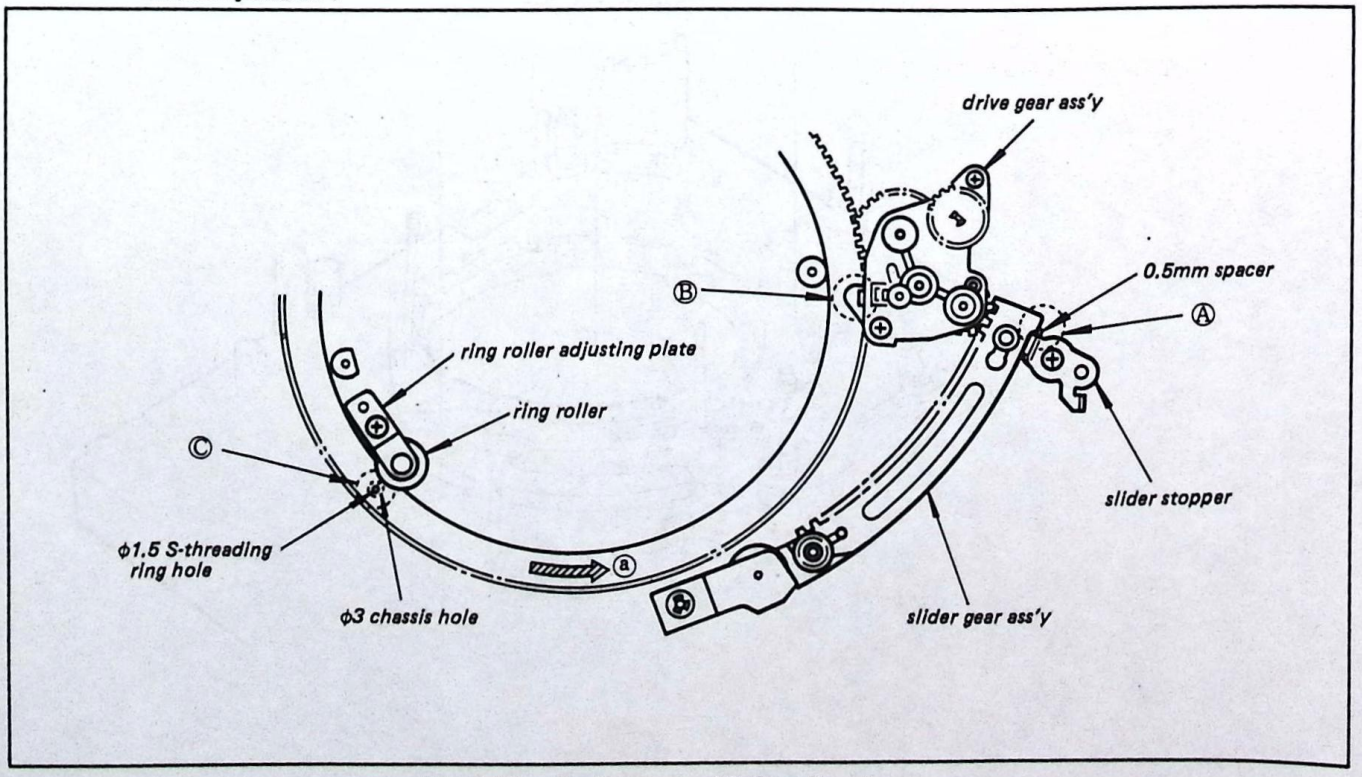

Fig. 3-18. Replacement of S-threading ring

3-10. Checking and Adjustment of Pinch Press Limiter Clearance (Check)

1) Put the set into STOP mode without a cassette inserted.

2) With the pinch solenoid adsorbed, check to see that clearance t (Fig. 3-20) is 0.3 mm – 0.7 mm. If not, follow the adjustment procedure below.

[Adjustment]

1) Adsorb the pinch solenoid.

2) Turn adjustment screw A and adjust so that the clearance between the slider stopper "t" is 0.3 mm – 0.7 mm.

3) Turn the pinch solenoid off, then on again to check.

4) After checking, lock the screw.

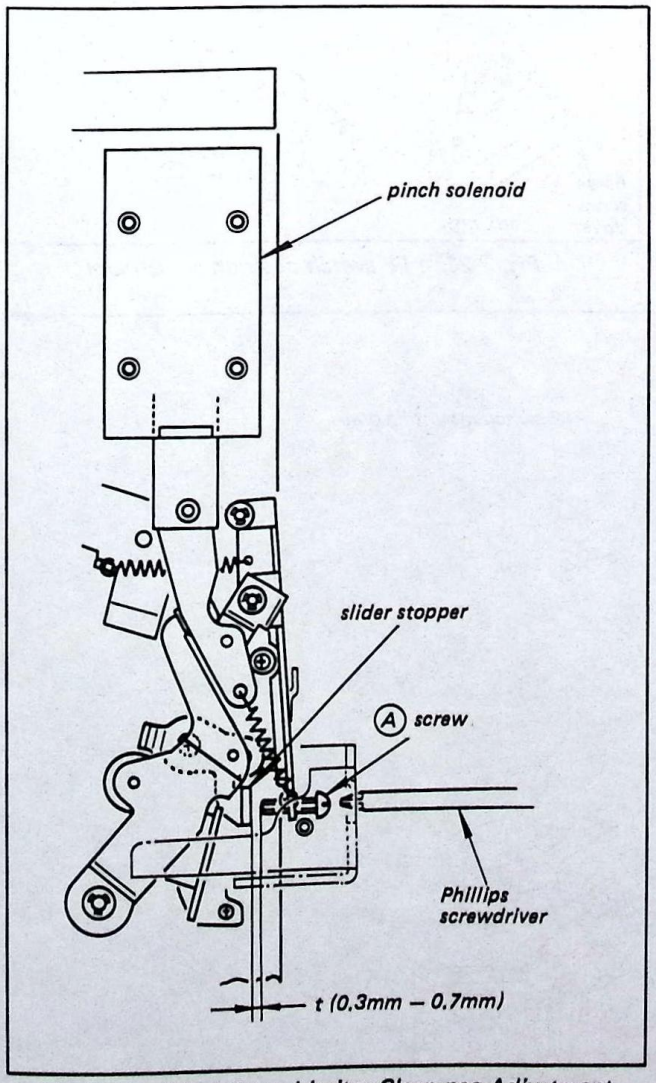

Fig. 3-20. Pinch Press Limiter Clearance Adjustment

3-11. CHECKING AND ADJUSTMENT OF MICROSWITCH POSITION

3-11-1. Checking and Adjustment of Threading End Switch (TE Switch) Position

[Checking Procedure] (Fig. 3-21)

Rotate the S-threading ring by hand and check that the TE switch turns on and off with a clicking noise while the lock roller is moving within the lower 2/3 of the straight portion ℓ of the recess (Ⓐ in Fig. 3-21) on the ring

If not, adjust as follows.

[Adjustment Procedure]

1) Bring the lock roller into the lower 2/3 of the 'ℓ' range in the recess on the S-threading ring, move the TE switch in the direction of the arrow using a blade-tip screwdriver, until the switch trips (click noise), then tighten screw Ⓑ.

2) Check the results of the adjustment following the check procedure given above.

[Removal] (Fig. 3-22)

1) Unscrew screw (1) and remove the TE switch subassembly.

2) Unhook the two hooks (2) and remove the TE switch from the TE switch mounting plate.

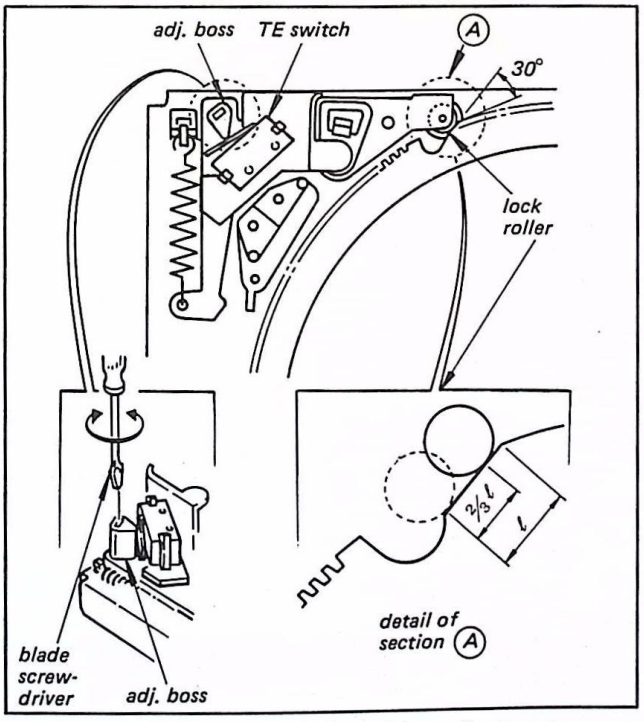

Fig. 3-21. TE switch position adjustment

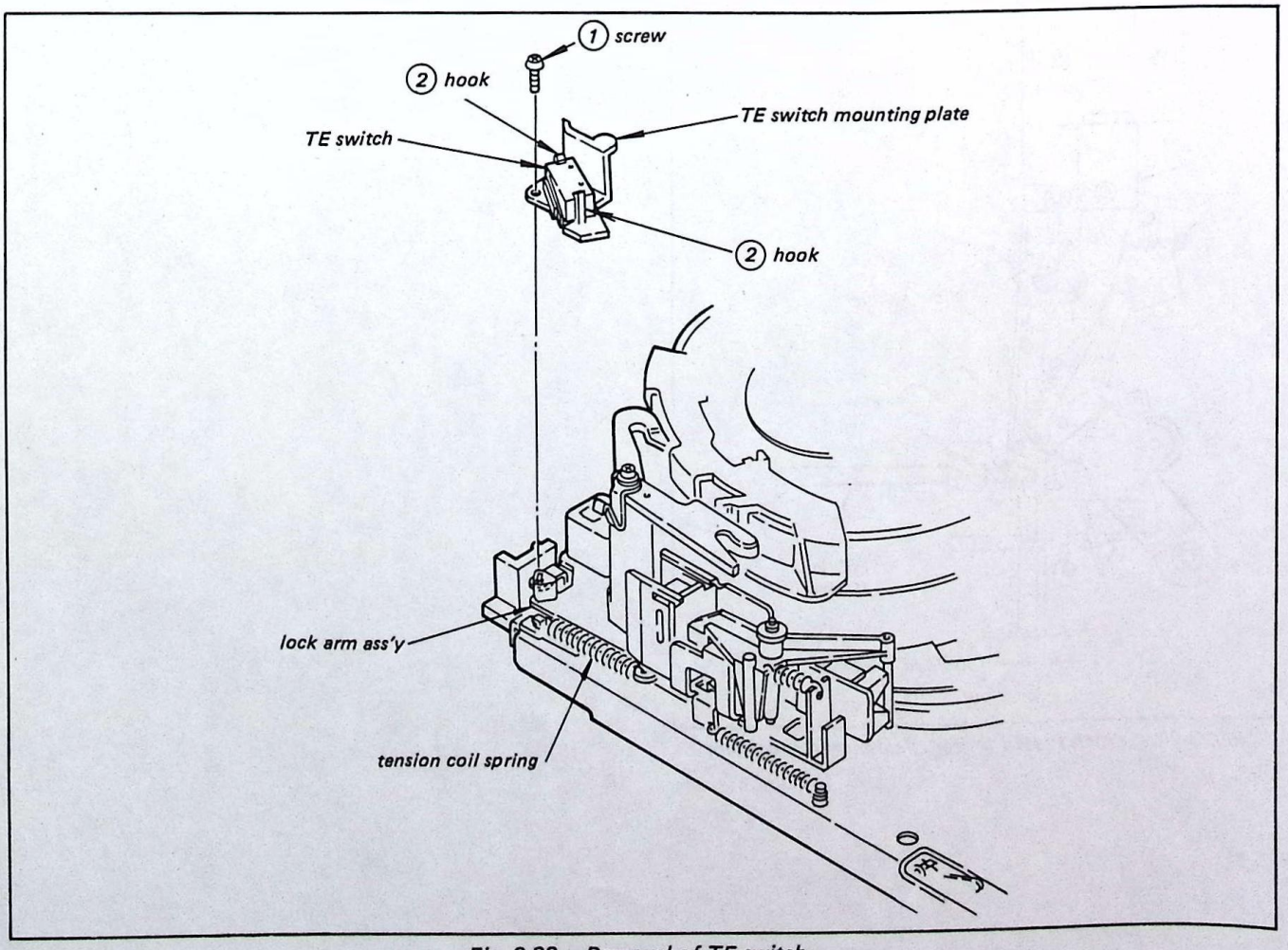

Fig. 3-22. Removal of TE switch

3-11-2. Checking and Adjustment of Unthreading End Switch (UTE Switch) Position

[Checking Method]

Rotate the S-threading ring by hand. Verify that the switch trips when a pin of ϕ1.5 is inserted at Section Ⓐ in Fig. 3-22 after the UTE switch arm roller assembly has dropped into the UTE switch cam groove. Verify that the switch does not trip when a pin of ϕ0.6 is inserted.

[Adjustment Method]

1) If the switch does not trip after inserting a ϕ1.5 pin, loosen small screw Ⓑ and adjust by moving in the direction of the arrow little by little.

2) Change the bend of the switch actuator as shown in Fig. 3-24 if the switch turns on when a ϕ 0.6 pin inserted.

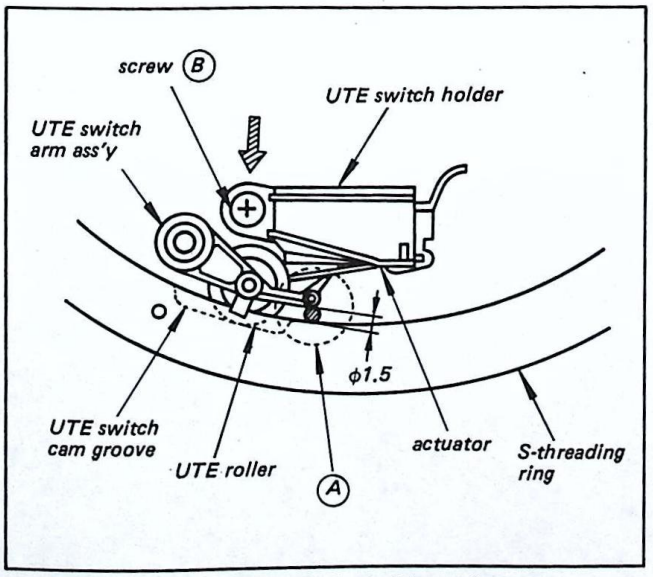

Fig. 3-23. UTE switch position adjustment

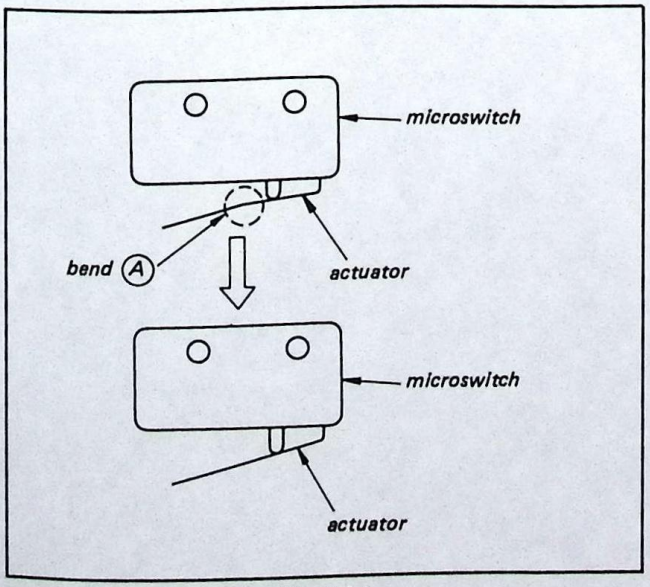

Fig. 3-24

Caution: Insert the ϕ1.5 and 0.6 pins in the positions shown in Fig. 3-24. (If the pins are inserted too close to the UTE roller side as shown in Fig. 3-25, the clearance inside will be less than 1.5 mm, even though it is 1.5 mm at the entrance, because of the switch construction.

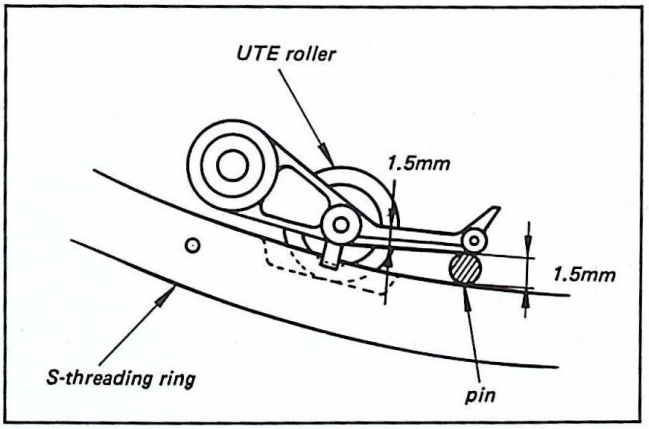

Fig. 3-25

[Removal]

1) Unscrew screw ① as shown in Fig. 3-26.

2) Release the switch hook from the chassis and remove the switch body while pushing the actuator to the "ON" position.

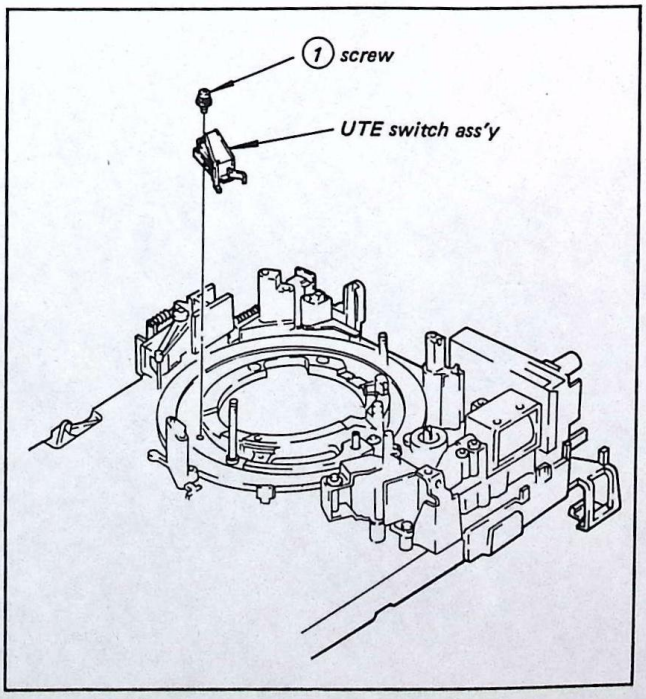

Fig. 3-26. Removal of UTE switch

3-11-3. Forward/Back Tension Measurement

Measurement Procedure

1) Remove the top panel so that the tape path of the back tension measurement tape (Jig Ref. No. J-1) is visible.

2) Insert the torque cassette and put the set into replay mode.

3) Read the indicated value of the S-reel side meter after the pointer has made one revolution.

Specified Value 45 ~ 48 g·cm

Notes: i) The set must be level when the measurement is performed.

ii) After measuring, the tape may go slack if the stop button is pushed. In this case, put the set into forward mode to take up the slack before removing the tape.

[Adjustment Procedure]

If the specified value is not obtained, adjust by turning RV-601 on the MA-6 board.

SECTION 4
TAPE PATH ADJUSTMENT

4-1. TRACKING ADJUSTMENT

This adjustment has significant effect on picture quality in each mode and tape interchangeability, so please perform it very carefully.

4-1-1. Preparation

1) Remove the cassette cover of alignment tape KR5-1M as shown in Fig. 4-1.

2) Clean the tape contact surfaces (tape guides, drum, capstan spindle, pinch roller, ACE·FE head surfaces) with chamois dampened with methanol.

3) Oscilloscope connections: 1ch: CN3-3 pin (MA-6 board)
2ch: CN3-1 pin (MA-6 board)

4) Replay the tracking portion of the KR5-1M alignment tape.

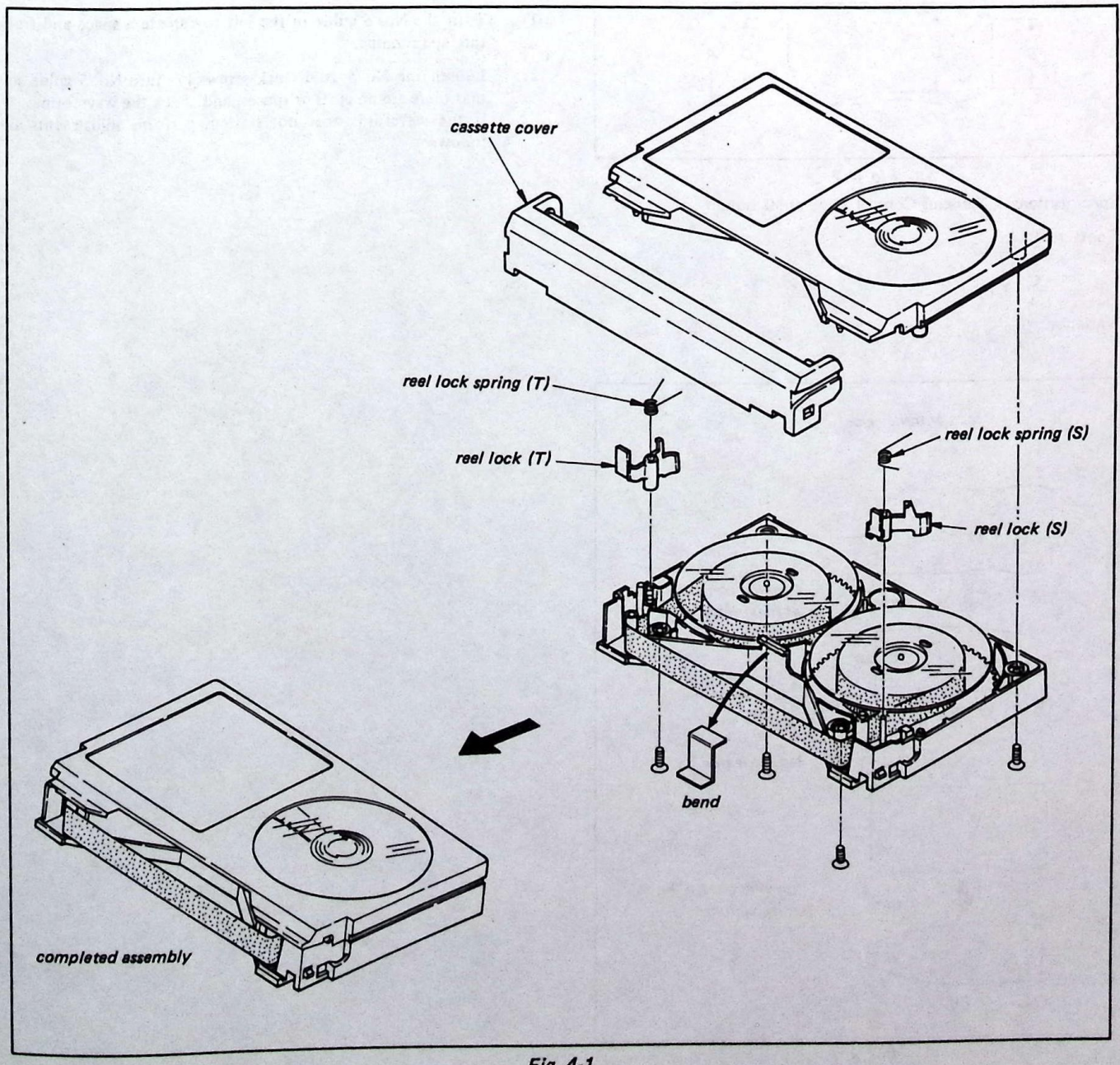

Fig. 4-1.

5) Confirm that the RF output waveform is flat, with maximum amplitude. (The waveform should increase and decrease, remaining flat, when the tracking control knob is turned back and forth.) Also, when the waveform is maximum, confirm that the RF output waveform variation and contact satisfy the specifications shown in Fig. 4-2. If they do not meet the specifications, follow the instructions in 6).

6) If the tracking control knob is turned and the entrance waveform does not flatten as shown in Fig. 4-3(a), perform the entrance side adjustment in 4-1-2. If the exit waveform does not flatten as shown in Fig. 4-3(b), perform the exit side adjustment in 4-1-3.

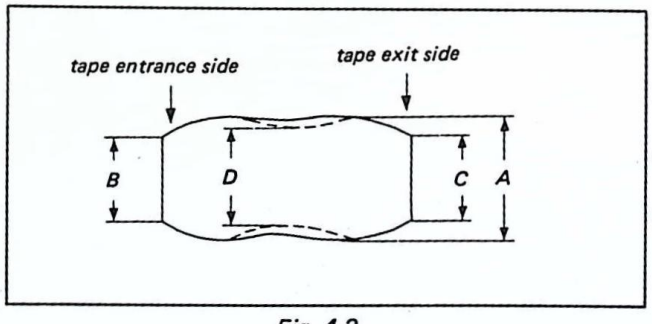

Fig. 4-2.

Specifications: Tracking Control Knob at Maximum

Contact: $\frac{B}{A} \geqq 0.7$

$\frac{C}{A} \geqq 0.7$

Variation: $\frac{D}{A} \geqq 0.9$

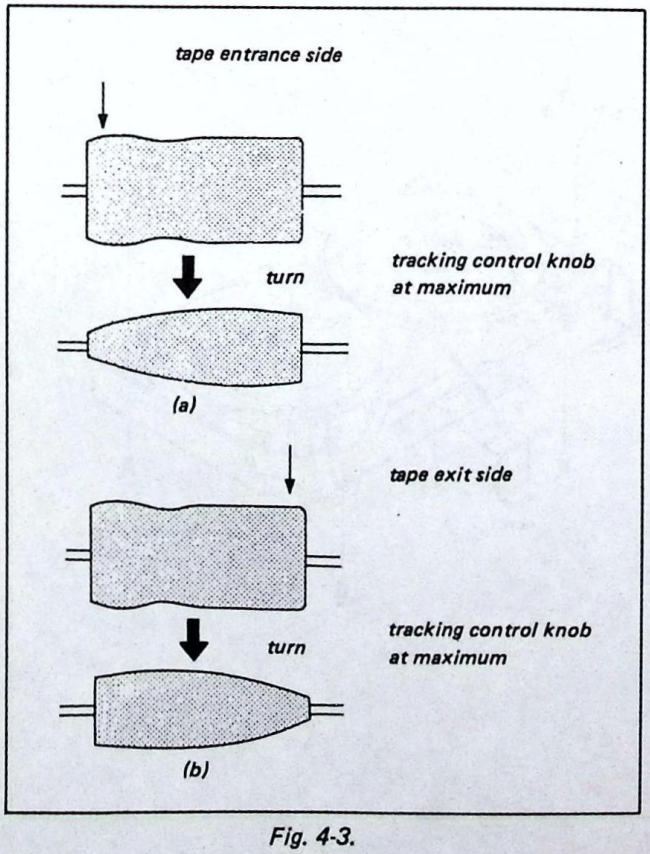

Fig. 4-3.

Alignment Tape KR5-1M

	CONTENTS	[Hz][dB]		Tape Counter	SL-B5 counter
βII	1. Color Bars	3K- 5	About	25~ 50 →	0~ 4
	2. Monoscope	333-25	About	50~ 75 →	~ 8
	3. RF Sweep	5K 25	About	75~100 →	~12
	4. Tracking	1K- 5	About	100~124 →	~16
βIII	5. Color Bars	3K- 5	About	124~140 →	~20
	6. Monoscope	5K-25	About	140~155 →	~24
	7. Color Bars βhi-fi	400Hz-33%	About	155~170 →	~28

4-1-2. Entrance Side Adjustment

Always perform the exit side adjustment as well as the entrance side adjustment. Fig. 4-4 illustrates the guides and adjustment locations.

1) Turn the No. 6 guide to the left to careate a space and free the tape running.

2) Loosen the No. 5 guide lock screw ①, turn No. 5 guide so that there are no curls or spaces, and check the waveform. If the waveform does not flatten, perform adjustments as follows.

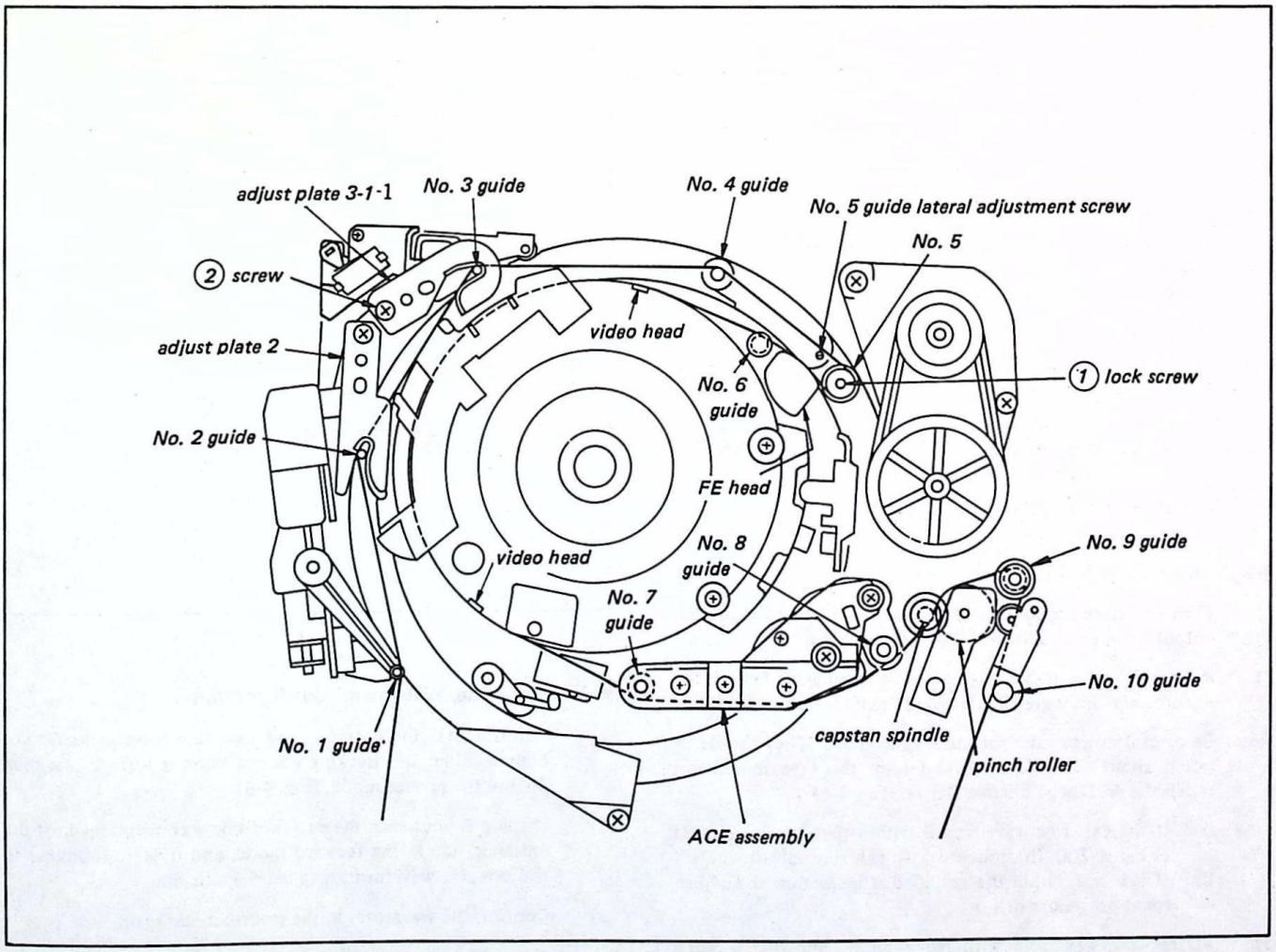

Fig. 4-4.

[If the waveform entrance output does not increase]

i) Loosen the adjust plate screw (2) on No. 3 guide, and move it towards the drum. When the waveform increases, tighten screw (2).

ii) Flatten the waveform with No. 5 guide.

[If the waveform entrance output does not decrease]

i) Move the No. 3 guide adjust plate away from the drum, and tighten screw (2) at the point just before the lower tension of the tape loosens.

ii) Flatten the waveform with No. 5 guide lateral adjustment screw.

iii) Adjust with No. 5 guide lateral adjustment screw so that there is no tape slack.

iv) After turning and locking the No. 5 guide, flatten the waveform by raising the waveform entrance a little, and lock the No. 5 guide lock screw at this point. Press the No. 5 guide down with a screwdriver so that it does not turn when locking. (Fig. 4-5)

v) Check for curl or spaces at the No. 5 guide. If these appear, proceed with the following adjustments.

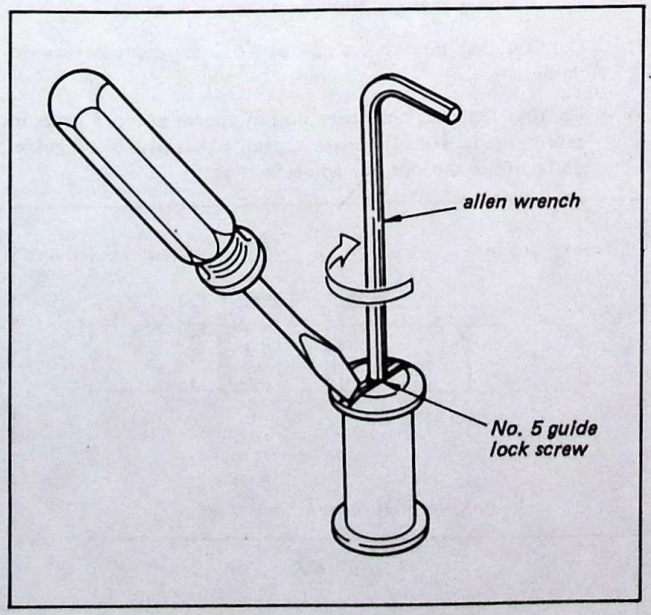

Fig. 4-5.

[If there is space]

Turn No. 4 guide counterclockwise to raise the tape and remove the space at No. 5 guide.

Note: Be careful not to create a large curl at the bottom of No. 4 guide.

[If there is curl]

a) When there is a space at the bottom of No. 4 guide:
Lean the adjust plate of No. 3 guide toward the outside until the point just before the lower tape tension loosens.

b) When there is curl but no space at the bottom of No. 4 guide:

i) Confirm that No. 4 guide is not raised too high. Turn clockwise to lower if necessary.

ii) If this does not solve the problem, tighten No. 5 guide lateral adjustment screw by turning clockwise until the curl disappears.

c) Adjust the waveform with No. 5 guide.

4-1-3. Exit Side Adjustment

1) Turn the tracking control knob clockwise to lower the RF output waveform to about 60% of the maximum.

2) Raise No. 7, 8 guides to free the tape running, and check the waveform. (This waveform is called "exit free waveform".)

Note: Be careful not to raise the guides too much. They should be raised about 0.3 ~ 0.5 mm, and also, the tape should not touch the ACE head bottom flange. (Fig. 4-6)

i) If the exit free waveform is within the range illustrated in Fig. 4-7(a), (b), proceed with exit side adjustment.

ii) If it is not within the specified range, follow the adjustment procedure in 4-3.

3) Flatten the waveform with No. 7 guide, and match No. 8 guide to the tape. (Lower the guide to the point just before the waveform changes, and where there is no curl.)

4) Confirm that there is no curl at No. 7, 8 guides in forward mode.

5) Confirm that curl and space do not appear at No. 8 guide in reverse mode. If curl or space appear, adjust with No. 9 guide, and perform the exit side adjustment again.

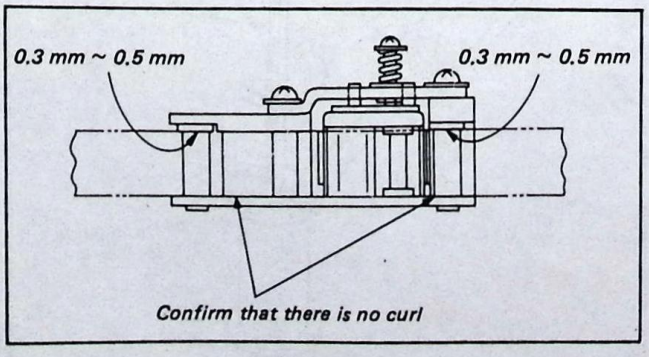

Fig. 4-6.

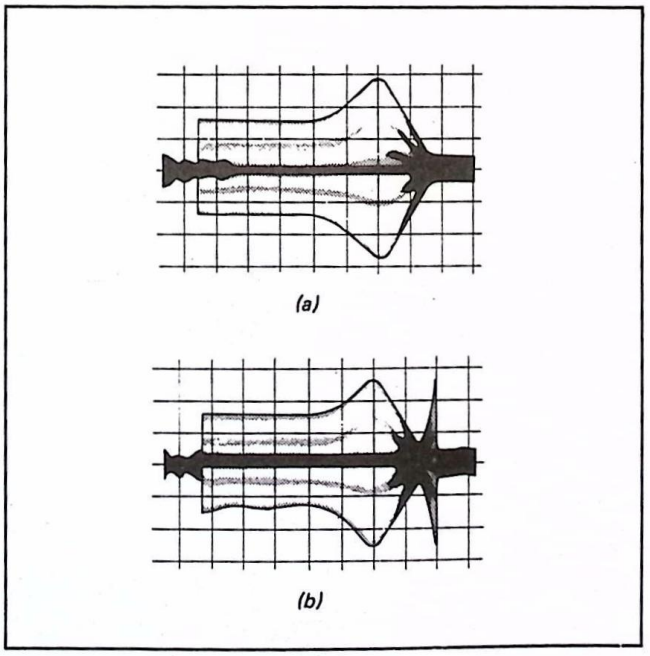

Fig. 4-7.

4-1-4. Reverse Waveform Confirmation

1) Confirm that the entrance and exit side waveforms do not bounce when the tracking control knob is turned (less than 30°) in the reverse mode. (Fig. 4-8)

2) If there is bounce in the entrance side waveform, readjust the entrance side in the forward mode, and if there is bounce in the exit side waveform, readjust the exit side.

3) Confirm the waveform in the reverse mode again.

Note: When readjusting, be sure to return the tracking control knob to the center position.

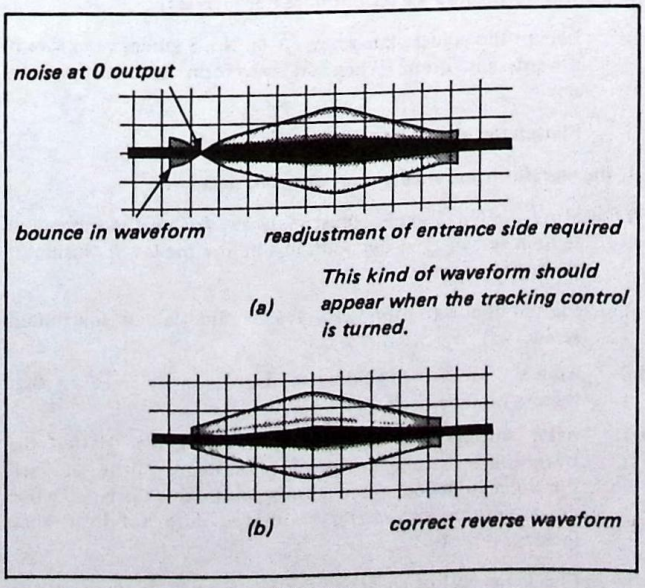

Fig. 4-8.

4-2. ADJUSTMENT FOR REMOVAL OR REPLACEMENT OF THE ACE ASSEMBLY

Perform the following adjustments when removing or replacing the ACE assembly.

4-2-1. Tracking Adjustment

1) Place the parallel plate (Jig, SL-0657) as shown in Fig. 4-9, turn audio head lateral adjustment screw (1) and confirm that the audio head is vertical.

2) Turn the tracking control knob clockwise to lower the RF output waveform to about 60% of the maximum.

3) Replay the tracking portion of the alignment tape (KP5-1M), raise No. 7, 8 guides about 0.3 ~ 0.5 mm, and check the exit free waveform of the RF output waveform.

Note: Be sure that the tape does not touch the bottom flange of the ACE assembly.

   i) If the waveform is within the range illustrated in Fig. 4-7(a), (b), proceed with the adjustment.
   ii) If the exit free waveform appears as shown in Fig. 4-10, turn the ACE lateral adjustment screw clockwise (less than 30°) until the waveform is within the range illustrated in Fig. 4-7(a), (b). (See Fig. 4-9)
   iii) If the exit free waveform appears as shown in Fig. 4-11, turn the ACE lateral adjustment screw counterclockwise (less than 30°), until the waveform is within the specified range.

4) Turn the No. 7 guide to flatten the waveform, and match the No. 8 guide to the tape.
(Lower the guide until the point just before the waveform changes.)

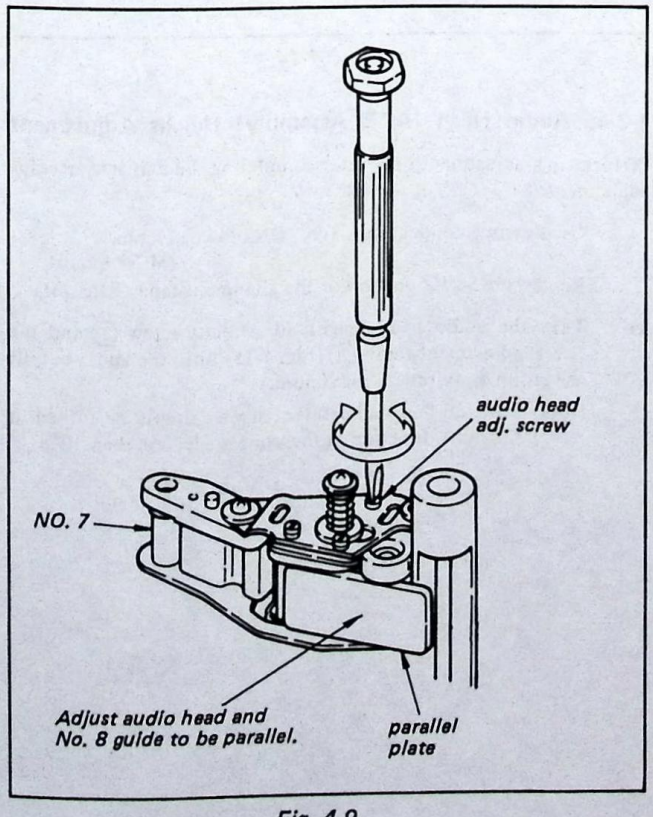

Fig. 4-9.

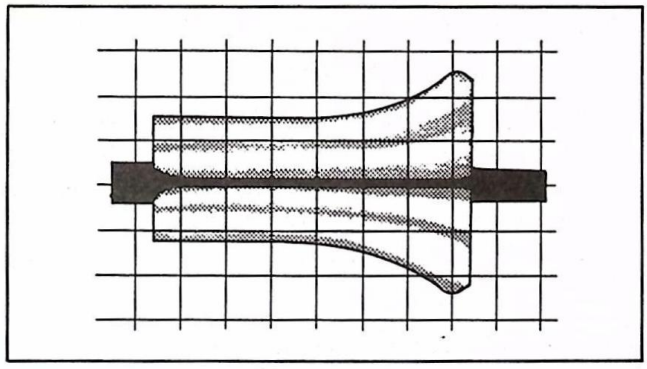

Fig. 4-10.

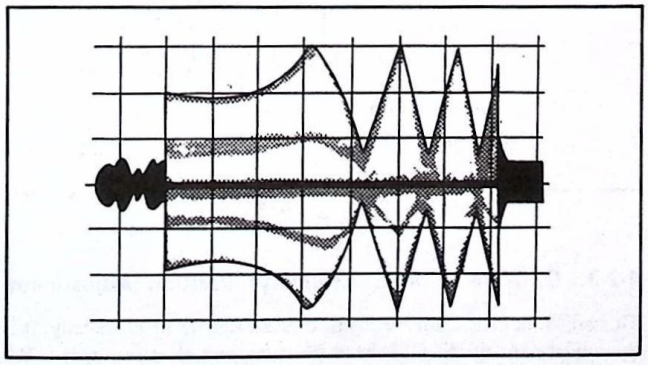

Fig. 4-11.

4-2-2. Audio Azimuth Peak Adjustment

1) Connect the oscilloscope as follows:
   1ch: CN904 ..... 11 pin (MC-1 board)
   2ch (frigger): CN 3 ..... 1 pin (MA-6 board)
   Replay the 5 kHz portion of the alignment tape (KR5-1M).

2) Turn the azimuth adjustment screw (Fig. 4-12) so that the amplitude of the 5 kHz waveform is maximum.

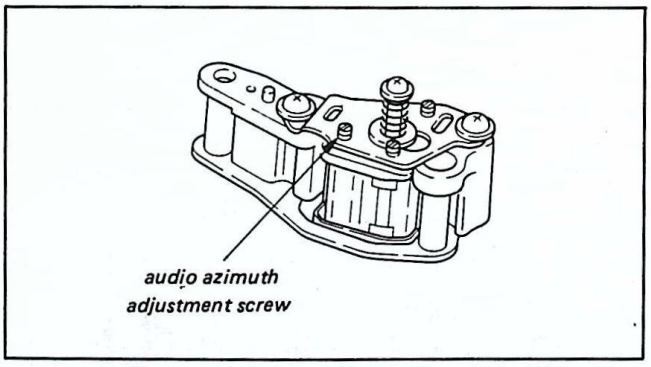

Fig. 4-12

4-2-3. CTL Head (ACE Assembly) Position Adjustment

This adjustment is both mechanical and electric: mechanically, it is the adjustment of the CTL head position, and electrically, it is the tracking control center adjustment. The procedure involves performing the electrical adjustment first, then the head position adjustment.

1) Connect the oscilloscope as follows:
   1ch: CN3 ... 3 pin (MA-6 board)
   2ch: CN904 ... 11 pin (MC-1 board)
   external trigger: CN3 ... 1 pin (MA-6 board)

2) Replay the tracking portion of the alignment tape (MR5-1M).

3) Turn the tracking control knob back and forth, and confirm that the output waveform level is maximum at the center click position, and that the 0 level of the audio signal is at the point where the RF output waveform Bch waveform appears, as shown in Fig. 4-13. If adjustment is necessary, proceed as follows.

4) Tracking Control Center Adjustment (Refer to Electrical Adjustments, 5-3-3, 4)

5) CTL Head Position Adjustment
   Set the tracking control knob at the center click position and loosen the two ACE assembly position adjustment screws ①. As shown in Fig. 4-14, slide the ACE assembly with a screwdriver until it is in the position shown in Fig. 4-13 and the RF output waveform is maximum. Tighten the screws when this position is obtained.

6) Replay the β II color bars of the alignment tape and check the picture quality.

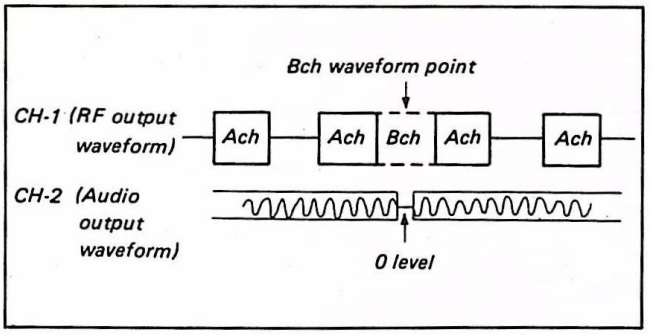

Fig. 4-13.

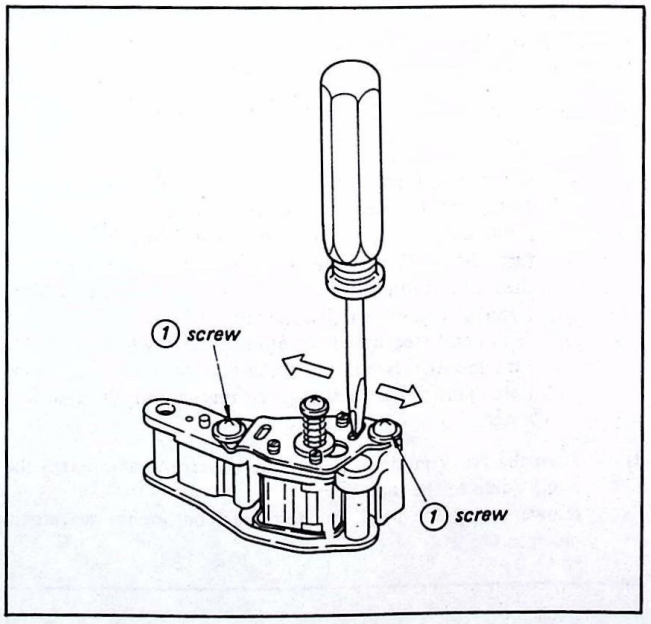

Fig. 4-14.

4-2-4. Audio Head (ACE Assembly) Height Adjustment

Perform this adjustment only after completing the exit side tracking adjustment.

1) Oscilloscope connection: 1ch: CN904 ... 11 pin (MC-1 board)
   Replay the 5 kHz portion of the alignment tape (KR5-1M).

2) Turn the audio head height adjustment screw ① and the lateral adjustment screw ② (Fig. 4-15) until the audio output waveform amplitude is maximum.
   Note: Both of these adjustment screws should be turned in the same direction at the same angle, less then 30°.

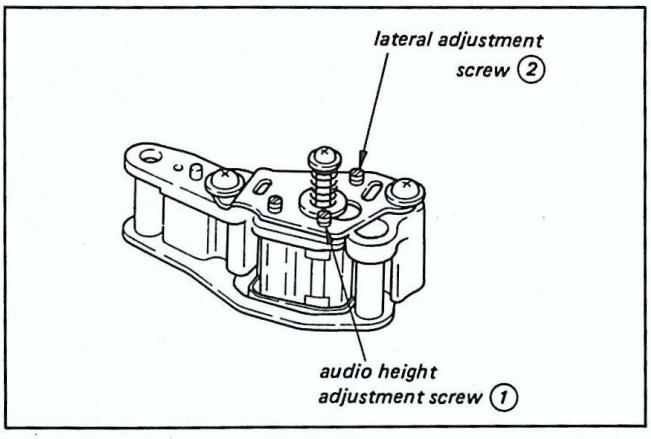

Fig. 4-15.

4-3. ADJUSTMENT FOR REMOVAL OR REPLACEMENT OF THE CAPSTAN MOTOR

1) Perform the vertical adjustment of the capstan spindle according to 3-4, Replacement and Adjustment of Capstan Motor.

2) Replay the tracking portion of the alignment tape (KR5-1M). Connect the oscilloscope as follows:
   1ch: CN3 ..... 3 pin (MA-6 board)
   2ch (trigger): CN3 ..... 1 pin (MA-6 board)

3) Turn the tracking control knob clockwise to lower the RF output waveform to about 60% of the maximum.

4) Raise No. 7, 8 guides a little, and check the exit free waveform.

   i) If the exit free waveform is within the range indicated in Fig. 4-16(a), (b), proceed from step 5).
   ii) If the peak of the exit free waveform is smaller than that illustrated in Fig. 4-16(a) (e.g.: Fig. 4-17), loosen the capstan lock screw, then turn the adjustment screw counterclockwise (less then 60°) until the waveform is within the specifed range.
   iii) If the peak shape of the exit free waveform differs from that shown in Fig. 4-16(b) (e.g.: Fig. 4-18), loosen the lock screw, then turn the capstan adjustment screw clockwise (less than 60°) until the waveform is within the specified range.

   Note: After turning the capstan adjustment screw, wait until the waveform stabilizes (about 10–15 seconds) before continuing with the adjustment.

5) Lock the capstan lock screw. (Turn clockwise until it stops, then turn a little more.)

6) Flatten the waveform with No. 7 guide, and match No. 8 guide to the tape.

7) Confirm and adjust according to 4-1-3, exit side adjustment procedure, items 4), 5).

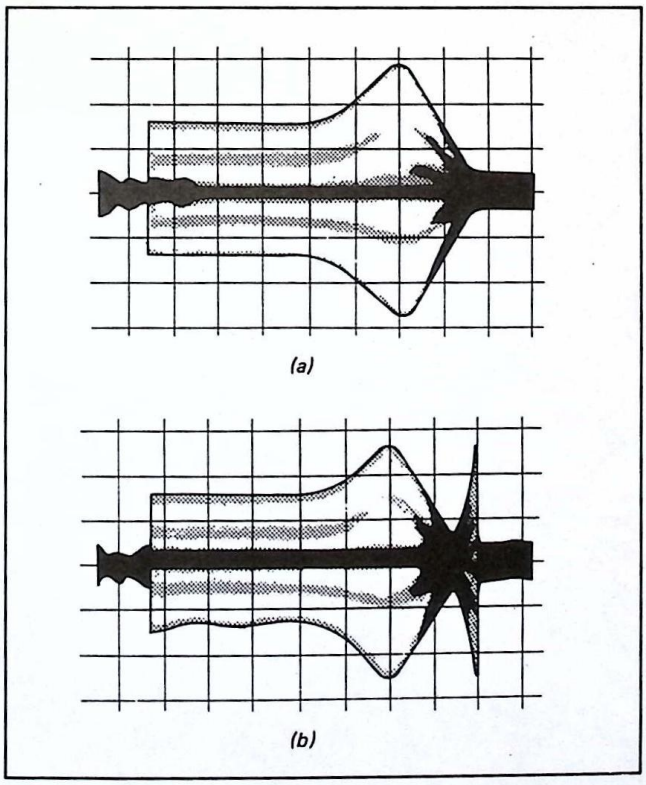

Fig. 4-16.

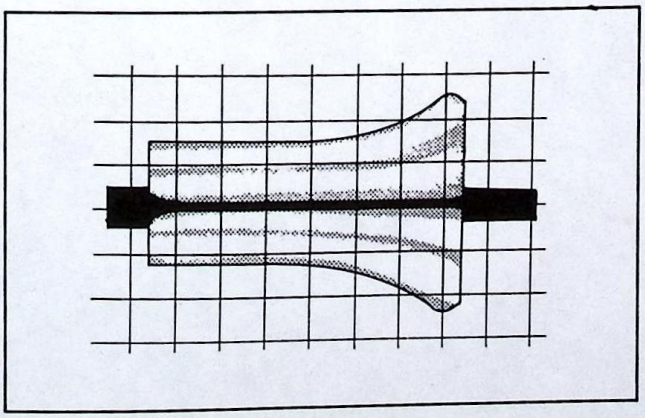

Fig. 4-17.

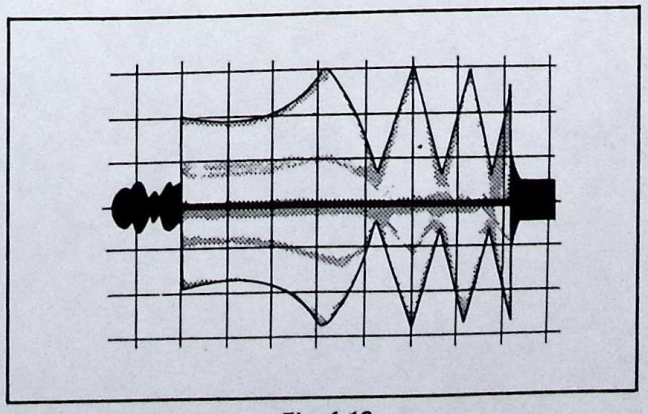

Fig. 4-18.

SECTION 5
ELECTRICAL ALIGNMENT

These adjustments are performed using the equipment listed below, an alignment tape and video signal.

EQUIPMENT REQUIRED

(1) Color TV

(2) Oscilloscope Dual-trace, Bandwidth more than 10 MHz with delay mode.

(3) Frequency counter

(4) NTSC pattern generator, with video output pin

(5) Digital voltmeter

(6) VOM (20 kΩ/V)

(7) Audio generator

(8) Level meter

(9) Distortion meter

(10) DC stabilized power supply (more than 3A)

(11) Alignment tape-Type KR5-1M Part No. 8-969-995-82

(12) Alignment tool (adjusting screwdriver for variable resistor, coil) Code. No. 7-700-733-01

[Preparatory Set-up for Alignment]

In this alignment, video signals obtained from the pattern generator or the timer tuner unit will be used as alignment signals. Therefore, the video output signals must be within the specifications. Verify video signals by connecting an oscilloscope to pin 1 of CN5 (Note i) on the MC-1 board, or to pin 24 of CN901 on the MA-6 board (Note ii). Check that the video signals are flat when the amplitude of the horizontal sync signal is about 0.3 V, the amplitude of the video portion is about 0.7 V, and the amplitude of the burst signal is about 0.3 V.
The video signal (color-bar signal) used in this alignment is shown in Fig. 5-1.

Notes: i) When the external power supply is connected to DC IN 12V jack.
ii) When the tuner timer unit is connected to the ACCESSORY CONNECTOR.

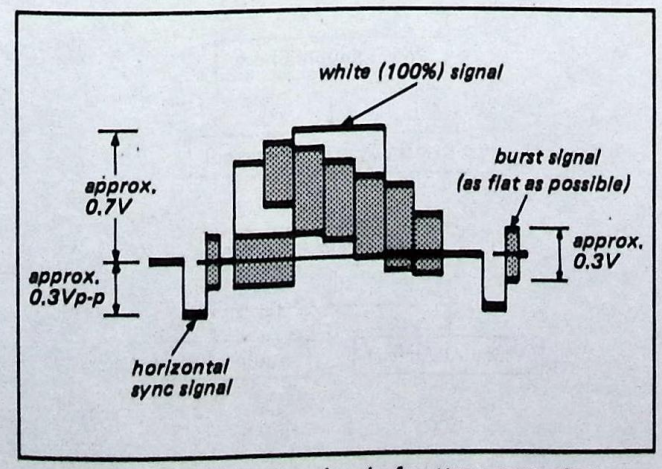

Fig. 5-1. Color-bar signal of pattern generator

[Alignment Tape]

KR5-1M

	Mode	Video signal	Audio signal	Playing time
1	β II	Color bar	3kHz – 5dB	4 min. for each segment
2		Monoscope	333Hz – 25dB	
3		RF sweep	5kHz – 25dB	
4		Tracking	1kHz – 5dB	
5	β III	Color bar	3kHz – 5dB	
6		Monoscope	5kHz – 25dB	
7		Color bar	β hi-fi 400Hz (33% mod.)	

[Color Bar Signal]

The color bar signal recorded on the alignment tape is shown in Fig. 5-2.

Note: Measure at pin 21 of JG-1 on the MA-6 board.

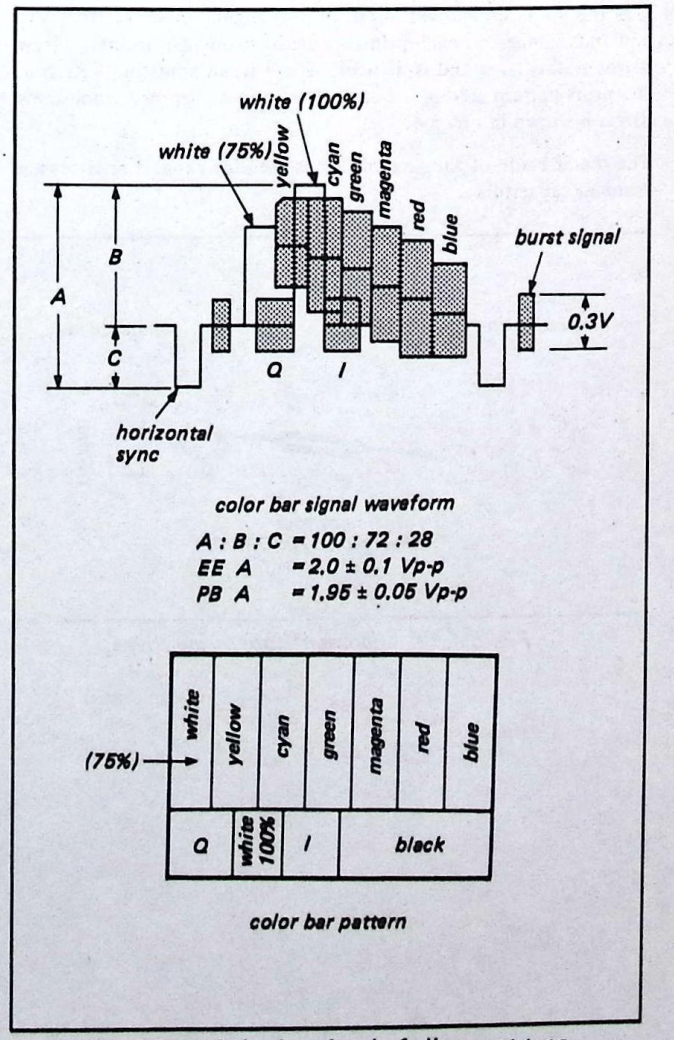

Fig. 5-2. Color-bar signal of alignment tape

[75Ω Terminating Method]

To terminate the video output terminal (pin 3 of CN5 on MC-1 board or pin 26 of CN901 on MA-6 board), follow the steps shown in Fig. 5-3.

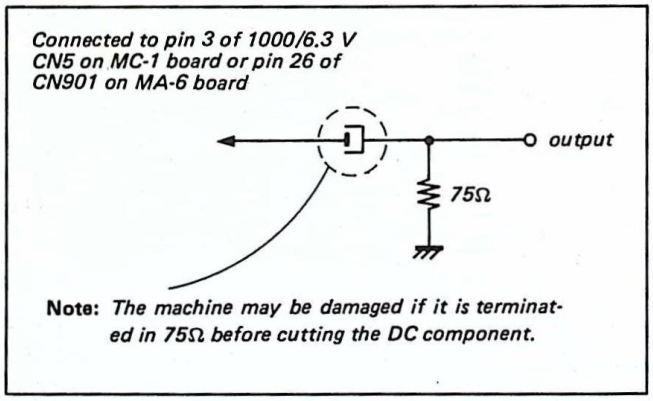

Fig. 5-3. 75Ω terminating circuit

[VR Alignment Tool Screwdriver]

Use the tool screwdriver supplied for alignment of variable VRs and inductances on each printed circuit board. An ordinary screwdriver is too large and is difficult to use when adjusting VRs from the print pattern side of a board. The special alignment tool screwdriver is shown in Fig. 5-4.

The metal blade of the screwdriver is used for variable resistors and trimmer capacitors.

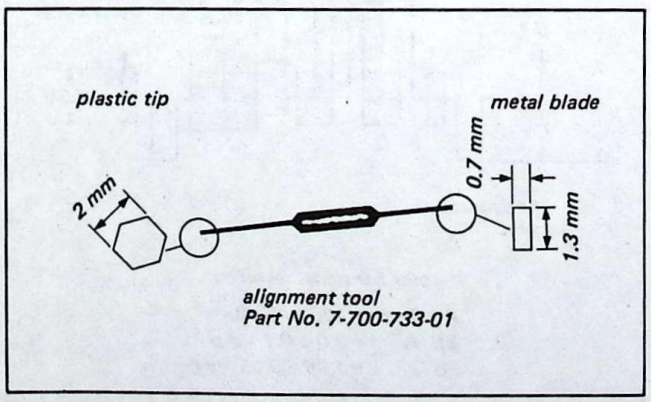

Fig. 5-4. Alignment tool screwdriver

[Required Levels and Impedances of Input and Output]

Inputs and outputs

CAMERA connector 14-pin, K-type connector
- Video in: 1 Vp-p ± 0.5 Vp-p 75 Ω unbalanced, sync negative
- Video out: 1 Vp-p ± 0.5 Vp-p 75 Ω unbalanced, sync negative
- Audio in: −20 dBs (0 dBs = 0.775 Vrms)
- Audio out: −5 dBs (at load impedance 100 kΩ) output impedance: less than 10 kΩ
- Power supply output: 12 V DC

ACCESSORY CONNECTOR 28-pin connector
- Video in: 1 Vp-p ± 0.5 Vp-p 75 Ω unbalanced, sync negative
- Video out: 1 Vp-p ± 0.5 Vp-p 75 Ω unbalanced, sync negative
- Audio in: − 10 dBs input impedance more than 47 kΩ
- Audio out: −5 dBs (at load impedance 100 kΩ) output impedance: less than 10 kΩ
- Power supply input: 12 V DC

Microphone input: Mini jack −60 dBs, for low-impedance microphone

Earphone output: Mini jack − 26 dB, for 8 Ω earphone

[Alignment Sequence]

The alignment should be performed following the sequence below.

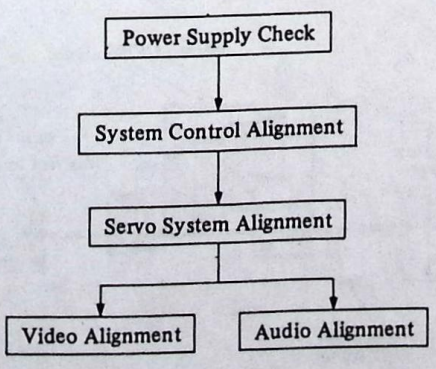

5-1. POWER SUPPLY CHECK (MA-6 Board)

Measure in PB mode.

1. +12V Check
   Pin 1 of CN10 to be 12.0 V ± 0.5 V.
2. REG 9V Check
   Pin 1 of CN11 to be 9.0 V ± 0.1 V.
3. REG 5V Check
   Pin 1 of CN-7 to be 5 V ± 0.1 V.

5-2. SERVO SYSTEM ALIGNMENT

Alignment Sequence

1. Reel servo system alignment
2. Drum servo system alignment
3. Capstan servo system alignment

5-2-1. Reel Servo System Alignment

1) FAST-FWD/REW Speed Alignment (MA-6 board)
Using VOM (20 kΩ/V)
Mode: FAST-FWD
VOM: RM-9 pin (8)

[Alignment method]
i) FAST-FWD the tape center section (with the tape wound equally on T- and S-side reels)
ii) Adjust to 4.3V ± 0.2V with RV602.
iii) Set up the REW mode at the tape center section.
iv) Check that VOM shows 4.3V ± 0.5V.

Using frequency counter:
Mode: FAST-FWD, REW
Frequenct Counter: FF: RM-9 pin (14) TP602
REW: RM-9 pin (13) TP603

[Alignment method]
FF
1) FAST-FWD the tape center section (with the tape wound equally on T- and S-side reels)
2) Adjust to 380 Hz ± 30 Hz with RV602.
REW
1) Set up the REW mode at the tape center section.
2) Check that the frequency is 380 Hz ± 50 Hz.

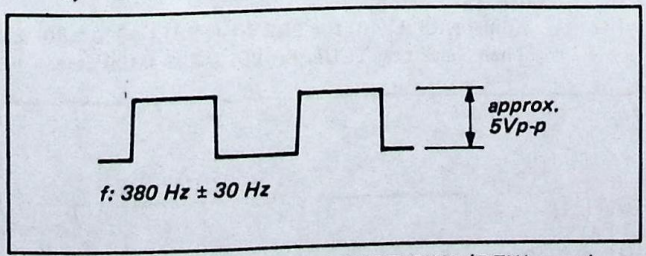

Fig. 5-2-1. Alignment of FAST-FWD/REW speed

2) FWD Back Tension Alignment (MA-6 board)
See "Mechanical Adjustment"
Mode: PB
Vom or torque cassette: CN8 pin (3)

[Procedure]
1) Playback the tape center section.
2) Adjust with RV601 for 0.85 ± 0.5V for Vom, or 46 ± 5g. cm for torque cassette.

5-2-2. Drum Servo System Alignment

1) Drum Free Speed Adjustment (MA-6 board)
Mode: Playback
Signal: Alignment tape βII color bar, or monoscope
Oscilloscope: CH-1 SV-11 pin (17) TP409
CH2 SV-11 pin (54) TP413

[Alignment method]
Adjust to 547μsec ± 10μsec with RV409 (See Fig. 5-2-2)

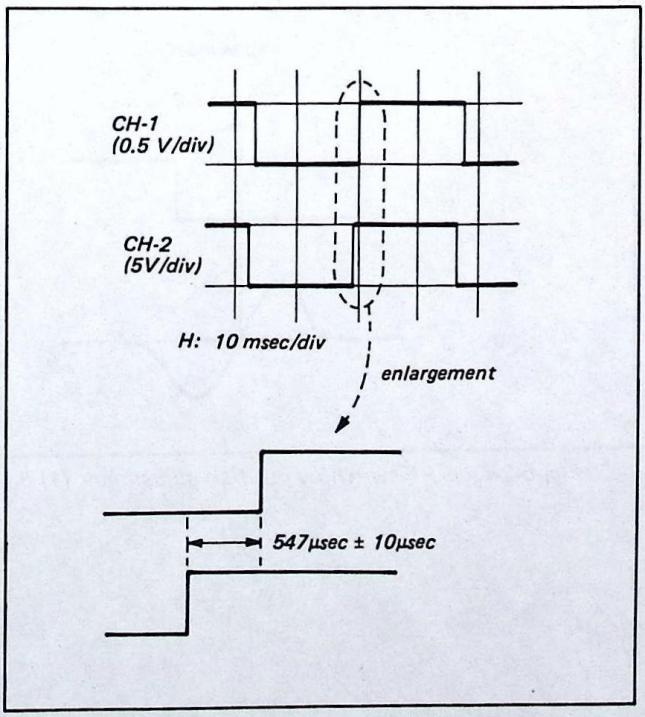

Fig. 5-2-2. Drum free speed adjustment

2. Xo Adjustment (MA-6 board)
Mode: Playback
Signal: Alignment tape β II color bar or monoscope
Oscilloscope: CH-1 SV-11 pin (54) TP413
CH-2 SV-11 pin (33) TP417
Adjustment Method: Adjust RV410 so that the oscilloscope CH-2 waveform 30 Hz or 60 Hz component (the component which locks to CH-1) Vp-p is minimum.

Note: This Xo adjustment affects the drum free speed adjustment, so be sure to perform drum free speed adjustment after completing.

3. RF Switching Position Adjustment (MA-6 board)

Mode: Playback
Signal: Alignment tape βII color bar or monoscope
Oscilloscope: CH-1 SV-11 pin (54) TP413
CH-2 SV-11 pin (8)

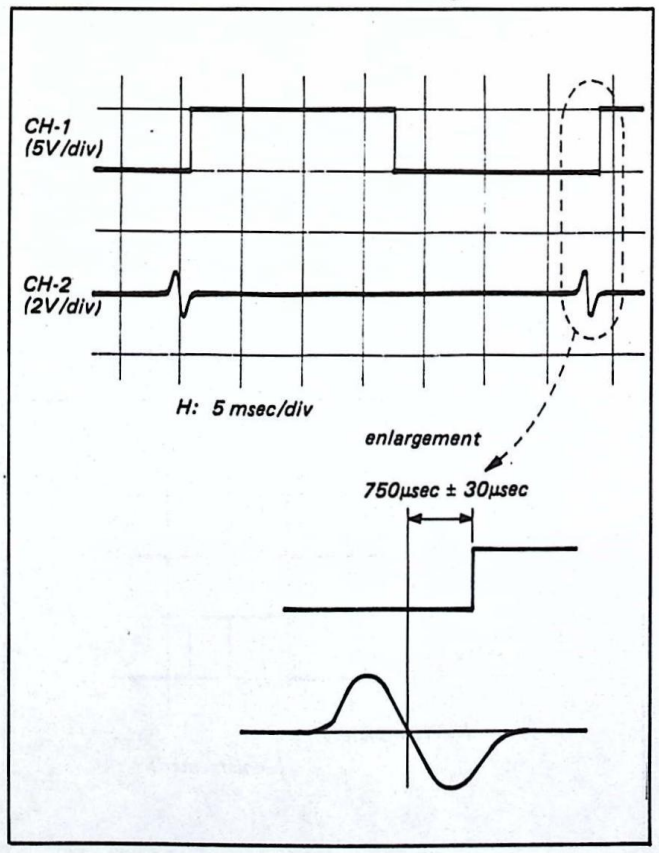

Fig. 5-2-4. RF switching position adjustment (1)

[Adjustment method]

1) Adjust to 750µsec ± 30µsec with RV405. (See Fig. 5-2-4)
2) Change connection of CH-2 only to pin (11) of SV-11.
3) Adjust to 750µsec ± 30µsec with RV406. (See Fig. 5-2-5)

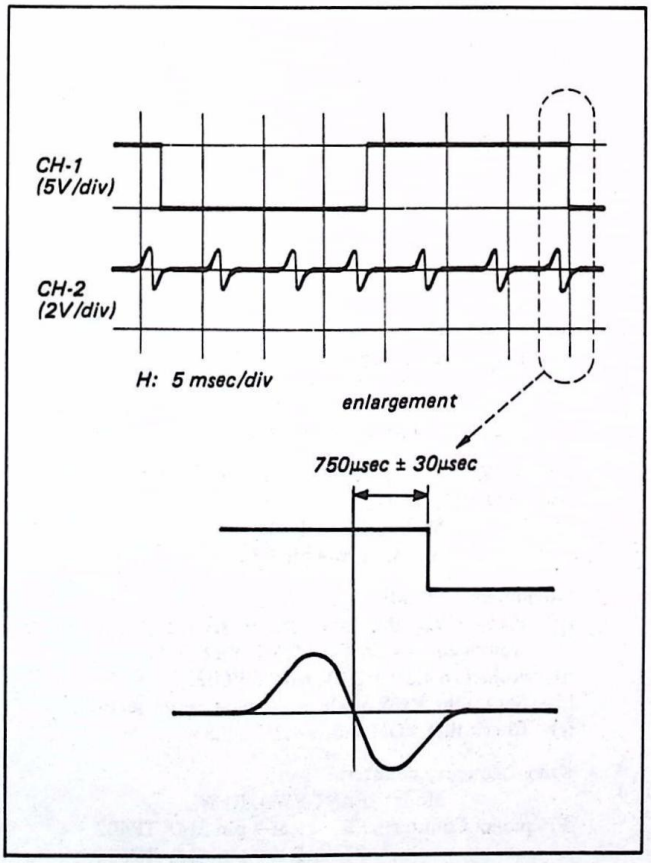

Fig. 5-2-5. RF switching position adjustment (2)

4. Drum f_H Correction Adjustment (MA-6 board)

Mode: Picture search ◀◀ ▶▶
Signal: Alignment tape β III color bar or monoscope
Oscilloscope: SV-11 pin (54) TP413

[Adjustment method]

1) Adjust with RV401 for TREV = (t PB) + +900 ± 50µsec. Then check that TCUE = (t PB) − 800 ± 100 µsec.

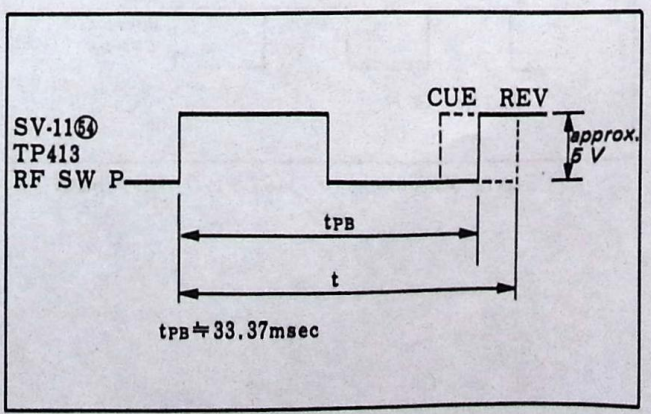

Fig. 5-2-6. Drum fH Correction Location

5-2-3. Capstan Servo System Alignment

1. Capstan DC Bias Adjustment (1) (MA-6 board)
   Mode: Playback
   Signal: Color bar from alignment tape βII, βIII or monoscope
   Oscilloscope: SV-11 pin (55) TP412

[Adjustment method]

1) Adjust to relevant duty (ratio for A and B) in the play mode with the RV as shown in Table 1.

Playback Mode	Adjustment RV	Duty
βIII	RV404	50% ±5%
βII	RV403	50% ±5%

Table 1.

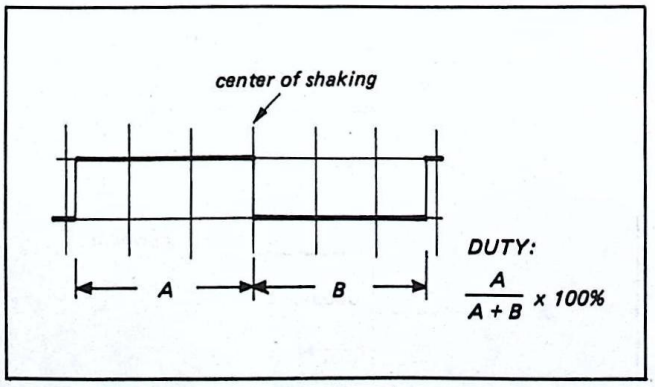

Fig. 5-2-7. Capstan DC bias adjustment

2. Capstan DC Bias Adjustment (2) (MA-6 board)
   Mode: Picture search ◀◀ ▶▶
   Signal: Alignment tape color bar or monoscope

[Adjustment method]

1) Set up the β III picture search mode and adjust with RV402 so that the progression of noise bars becomes as slow as possible. (see Fig. 5-2-8)
2) Set up the β II picture search mode and check that noise bars do not progress very quickly.

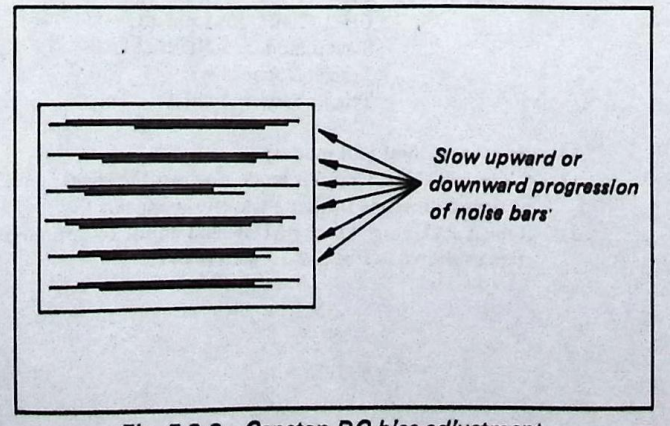

Fig. 5-2-8. Capstan DC bias adjustment

3. FG AMP DC Bias Adjustment (MA-6 board)
   Mode: Playback
   Signal: Alignment tape β II color bar or monoscope

Adjustment Method (1) [For digital (4 digit display)]

1) Alignment tape playback: SP-1 pin (33) (TP405) voltage measurement to be V1.
2) Short SD-1 pin (3) (TP402) and 5V (TP419): SP-1 pin (33) (TP405) voltage measurement to be V2.
3) Adjust RV411 so that the difference between V1 and V2 is less than 5 mV.
4) Remove the short in step (2). SP-1 pin (34) (TP404) voltage measurement to be V3.
5) Short again as in step 2.: SP-1 pin (34) (TP404) voltage measurement is to be V4.
6) Adjust RV412 so that the difference between V3 and V4 is less than 5 mV.
7) Fine adjust with RV412 so that SV-11 pin (55) (TP412) duty is 50 ± 3 % (use oscilloscope).

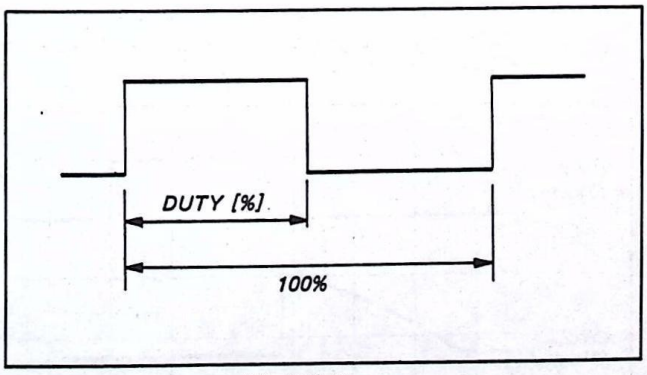

Fig. 5-2-9.

8) Remove the short in step (5).

Adjustment Method (2) [No digital]

1) Play the alignment tape, short SD-1 pin (3) (TP402) and 5V (TP419), and adjust RV411 so that SV-1 pin (33) (TP405) DC voltage is within 10 mV of that before the short.

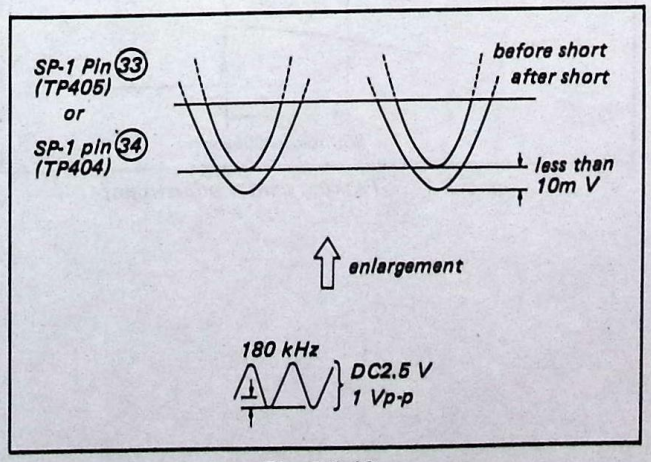

Fig. 5-2-10.

2) Playback the alignment tape, short SD-1 pin (3) (TP402) and 5V (TP419), and adjust RV412 so that SP-1 pin (34) (TP404) DC voltage is within 10 mV of that before the short.
3) Short SD-1 pin (3) (TP402) and 5V (TP419) and adjust RV412 so that SV-11 pin (55) (TP412) duty is 50 ± 3%.
4) Remove the SD-1 pin (3) and 5V short.
Note: If the playback picture is disturbed during adjustment because the waveform does not lock, the VTR may automatically stop. In this case go into playback mode again and repeat the adjustment.

4) Tracking Center Adjustment (MA-6 Board)
Mode: Playback
Signal: Alignment tape βII or βIII color bar, or monoscope
Oscilloscope: CH-1 SV-11 pin (17) TP409
CH-2 SV-11 pin (50) TP415

[Adjustment method]
i) Set the TRACKING knob to the center click position.
ii) Adjust to 660 μsec ± 50 μsec with RV408. (See Fig. 5-2-11).

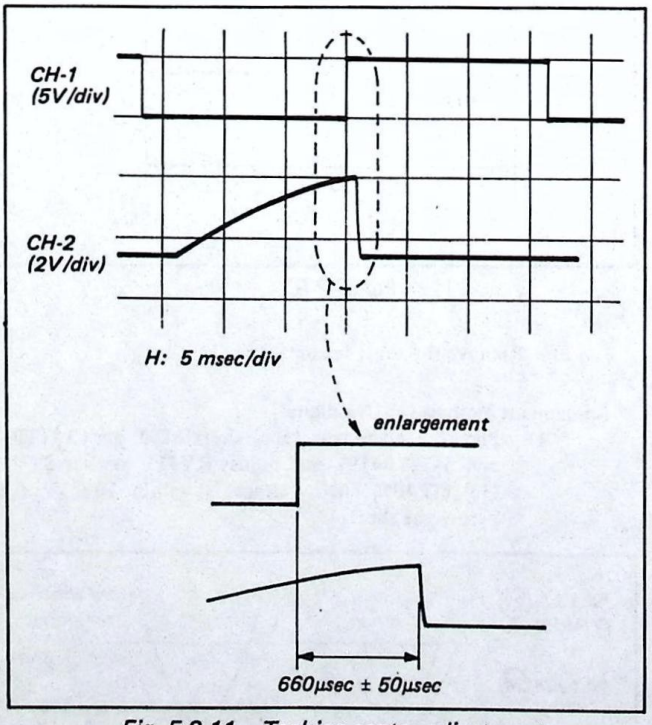

Fig. 5-2-11. Tacking center adjustment

5) Edit Tracking Center Adjustment (MA-6 Board)
Mode: Recording
Signal: Alignment tape βII or βIII color bar
Oscilloscope: CH-1 SV-11 pin (17) TP409
CH-2 SV-11 pin (51) TP414

[Adjustment method]
i) Set the TRACKING knob to the center click position.
ii) Adjust to 660 μsec ± 50 μsec with RV407. (See Fig. 5-2-12).

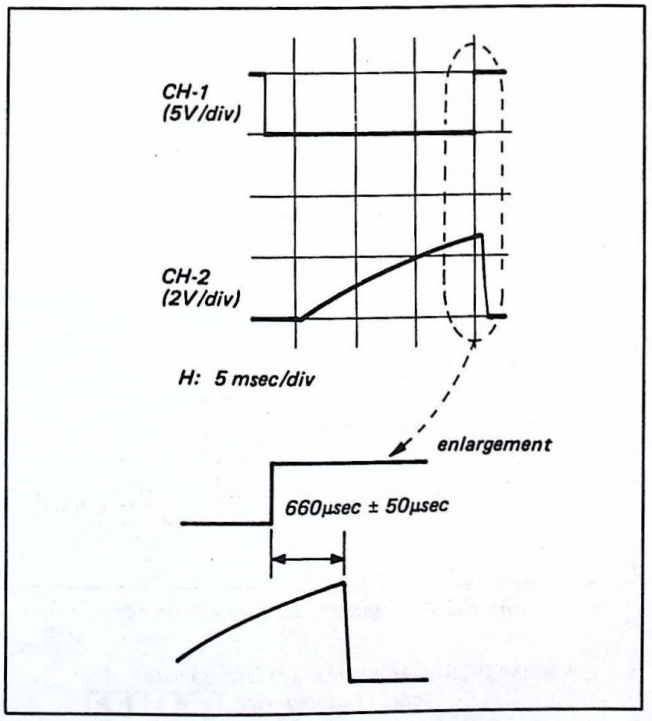

Fig. 5-2-12. β II tracking center adjustment

6. Capstan Brake Alignment (MA-6 board)
- Adjust in the βII and βIII modes.
Mode: Playback + Pause
Signal: Alignment tape βII or βIII color bar, or monoscope
Oscilloscope: CH-1 TP401, CN9 pin (2)
CH-2 TP405, SP-1 pin (33)
Sweep mode: NORMAL
Trigger slope: +
Trigger source: CH-1

[Adjustment method (β II mode)]
1) Go into PAUSE from PB mode. (Adjust the trigger level of the oscilloscope so that a waveform appears.)
2) Repeat PAUSE → PB → PAUSE and adjust to optimum state as shown in Fig. 5-2-13 with RV413.

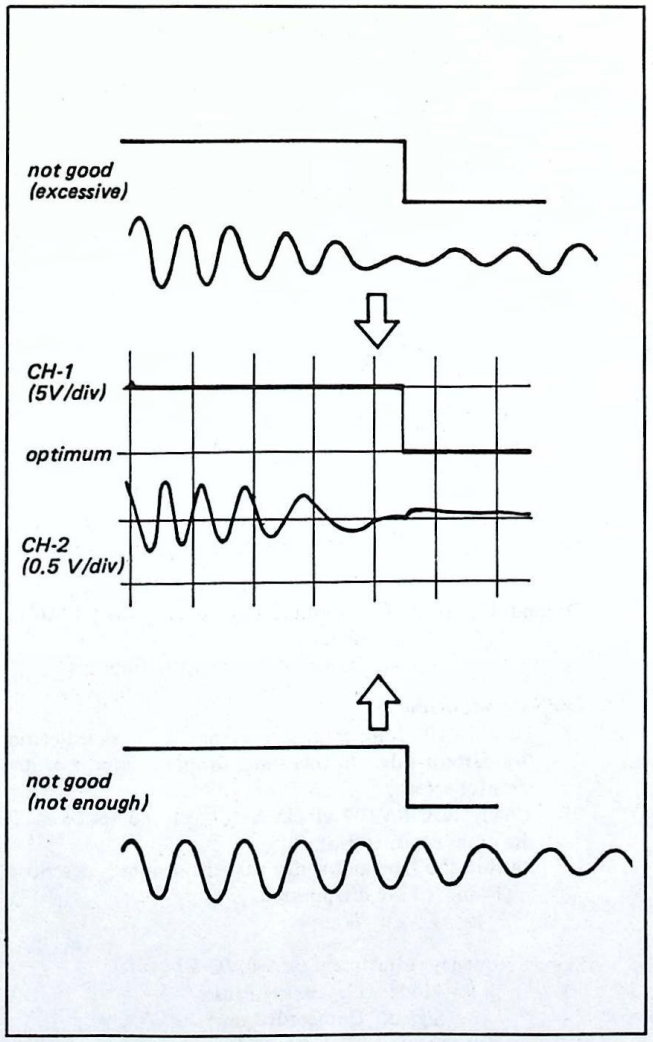

Fig. 5-2-13. βII capstan brake alignment

5-3. VIDEO SYSTEM ALIGNMENT

As a rule, first the playback system is aligned with an alignment tape to check that it operates normally, then the recording system is aligned.

The alignment sequence is shown below. The Y signal and chroma signal systems are aligned for both playback and recording systems.

Color video signals supplied by the pattern generator or timer tuner unit are used as video input signals for video system alignment in the record mode. Check that the sync and color burst signals conform to the specifications designated in "Preparatory Set-up for Alignment" in Fig. 5-1.

[Playback System Alignment]

1. Playback frequency response adjustment
2. De-emphasis level adjustment
3. Playback Y signal level adjustment
4. Dropout compensator threshold adjustment

[Slow Motion Playback System Alignment]

5. Skew frequency adjustment
6. AGC adjustment
7. Variable speed delay Y signal level adjustment
8. Variable speed delay chroma signal level adjustment

[Record System Alignment]

9. VCO alignment
10. Comb AGC adjustment
11. Sync and peak AGC adjustment
12. Comb filter adjustment
13. Sync tip carrier frequency set adjustment
14. Deviation adjustment
15. White clip and dark clip adjustment
16. Y Signal recording current adjustment
17. Chroma record current adjustment

1. Playback Frequency Response Adjustment (MA-6 board, RP-11 board)

- Adjust both A-and-B-ch.
- B-ch is indicated by ( ).

Mode: Playback
Signal: Alignment tape β II RF sweep
Oscilloscope: Pin (3) of CN-3, MA-6 board
External trigger: Pin (1) of CN3, MA-6 board

[Adjustment method]

1) Increase the output level to maximum with the TRACKING knob.
2) Set the trigger slope to – (+).
3) Adjust to flatten 2 MHz to 5.1 MHz section with RP-11 board RV1 (RV2). (See Fig. 5-3-1)

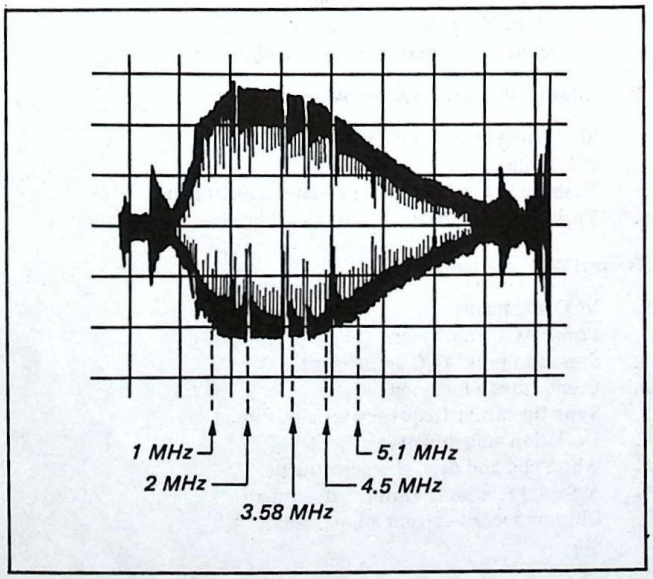

Fig. 5-3-1.

2. De-emphasis Level Adjustment (MA-6, YF-1 boards)

Mode: Playback
Signal: Alignment tape β II color bar
Oscilloscope: DE-2 board, pin (33)

[Adjustment method]

Adjust to 1.3V ± 0.05 Vp-p with YF-1 board RV1. (See Fig. 5-3-2)

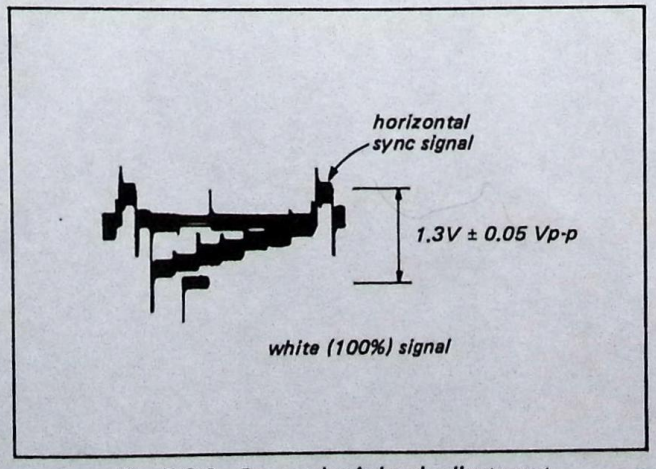

Fig. 5-3-2. De-emphasis level adjustment

3. Playback Y Signal Level Adjustment (MA-6 board)

Mode: Playback
Signal: Alignment tape β II color bar
Oscilloscope: MA-6 board, pin (21) of JG-1

[Adjustment method]

Adjust to 1.95 Vp-p with RV105 on the MA-6 board.

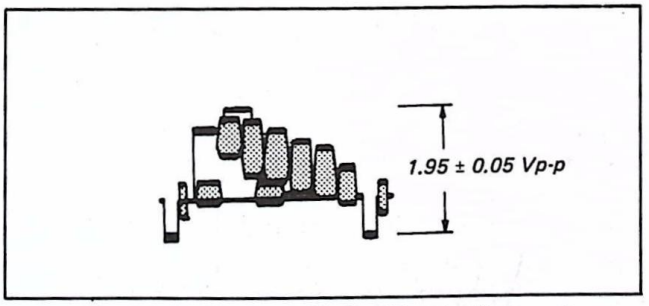

Fig. 5-3-3. Playback Y signal level adjustment

4. Dropout Compensator Threshold Adjustment (MA-6 board)

Mode: Playback
Signal: A recorded tape with dropouts

[Adjustment method]

1) Turn RV107 fully counterclockwise (◠) as seen from the pattern side. In this state, dropouts appear on the monitor screen.
2) Slowly turn RV107 clockwise (◠) and set to make the dropouts disappear.
3) Rewind the tape and verify that the dropouts described in (1) above have disappeared.

5. Skew Frequency Adjustment (MA-6, JG-1 boards)

Mode: Playback + Pause
Signal: Unrecorded tape
Frequency counter: JG-1 pin (22)
Connection: Short pins (2) and (36) of JG-11

[Adjustment method]

1) Adjust to 16.15 kHz ± 0.05 kHz with JG-1 RV2. (See Fig. 5-3-4)

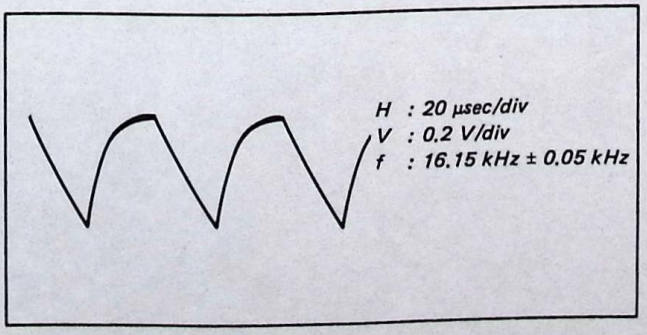

Fig. 5-3-4.

6. Variable Speed ACC Adjustment (MA-6 board, JG-1 board)
   Mode: Playback + Pause
   Signal: Alignment tape β III color bar
   Oscilloscope: CN901 pin (26)
   (To be terminated with 75Ω according to Fig. 5-3.)

[Adjustment method]
Set for identical output levels during both playback and pause with JG-1 board RV3.

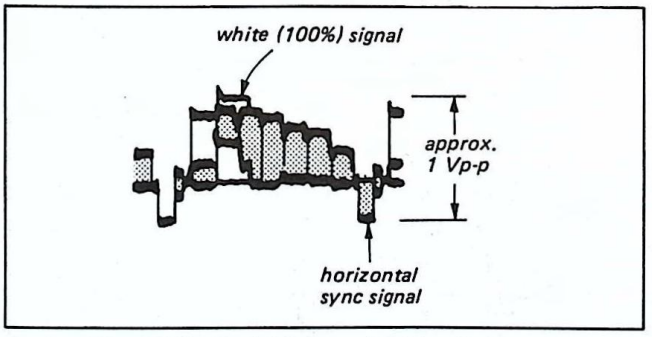

Fig. 5-3-5. Variable speed AGC adjustment

7. Variable Speed Delay Y signal Level Adjustment (MA-6 board)
   Mode: Playback + Pause
   Signal: Alignment tape βII color bar
   Oscilloscope: CH-1 JG-1 pin (9)
   CH-2 JG-1 pin (22)
   Input: DC range

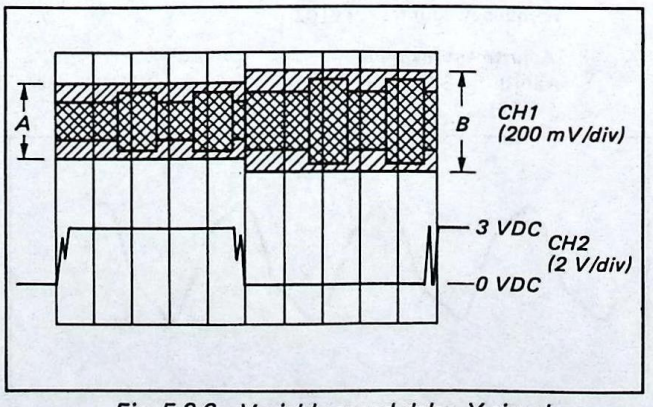

Fig. 5-3-6. Variable speed delay Y signal level adjustment

Adjust JG-1 RV1 so that the signal level B when CH2 is "L" "about OV" is 1.25 times the signal level A when CH2 is "H . . . about 3V".

$\frac{B}{A}$ = 1.25 see figure

Note: The signal level can be changed by RV1 only when CH-2 is "L".

8. Variable Speed Delay Chroma Signal Level Adjustment (MA-6 board)
   Mode: Playback + Pause
   Signal: Alignment tape β II color bar
   Oscilloscope: CN901 pin (26)
   (To be terminated with 75Ω according to Fig. 5-3.)

[Adjustment method]
Adjust CM-4 board RV1 so that chroma signal flicker is minimum. (See Fig. 5-3-7)

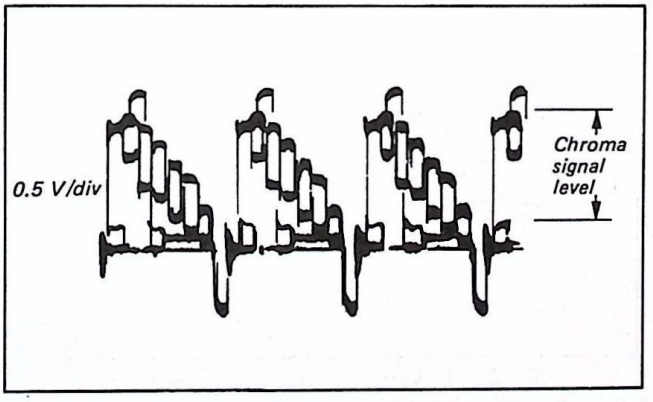

Fig. 5-3-7. Variable speed Chroma Signal Level Adjustment

9. VCO Alignment
   Mode: Playback
   Signal: Color bar
   Oscilloscope and Frequency counter: CM-4 board pin (18)
   (Pin (17) for serial nos. 200, 120 and before)
   Digital Voltmeter: CM-4, pin (16) (+ side) and pin (15) (– side)
   (Pins (6) and (7) for serial nos. 200, 120 and before).

[Adjustment method]
Adjust to 1.40 ± 0.01V DC with (M-4 board RV2).
(There should be color on the playback picture.)

Note: The frequency also changes when RV2 is turned. Verify that the frequency is locked to f=5.5069 MHz.

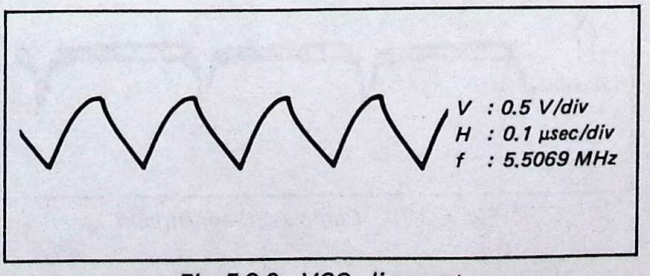

Fig. 5-3-8. VCO alignment

10. Sync AGC and Peak AGC Alignment (MA-6, YM-1 boards)
Mode: Record or E-E
Signal: Color bar
Oscilloscope: JG-1 pin (21)

[Adjustment method]
1) Turn RV21 of YM-1 so that it is MAX.
2) Adjust to 2.15 Vp-p with RV3.
3) Slowly turn RV1 counterclockwise (↺) and set it so that the output just starts to lower.
4) Adjust to 2.0V ± 0.05 Vp-p with RV3. (See Fig. 5-3-9)

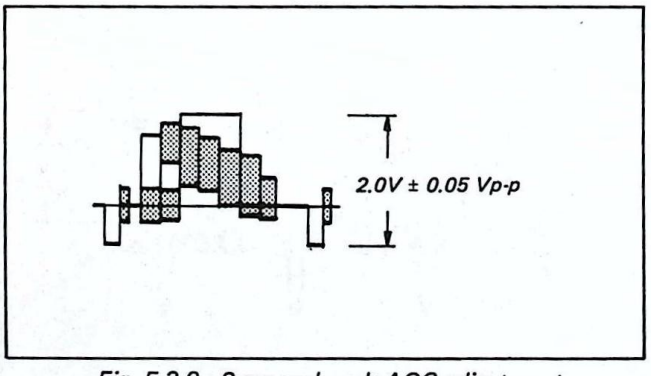

Fig. 5-3-9. Sync and peak AGC adjustment

11. Comb AGC Alignment (MA-6, YS-1 boards)
Mode: Record or E-E
Signal: Color bar
Oscilloscope: YS-1 pin (18)
(attach 20 kΩ – 30 kΩ resistor to end of probe)

[Adjustment method]
Adjust to eliminate level differences for each H step with YS-1 board RV2. (See Fig. 5-3-10)

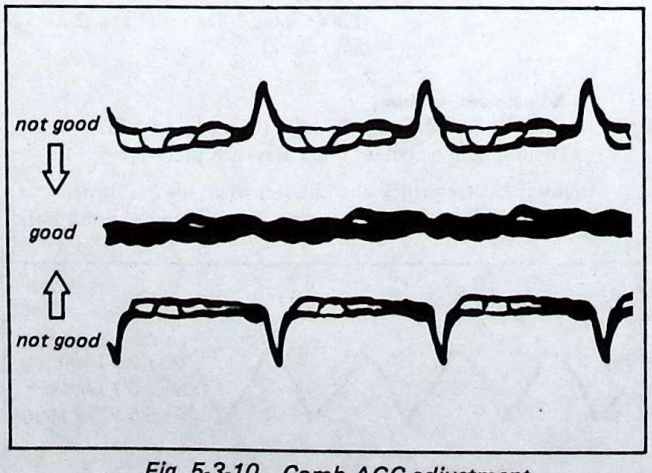

Fig. 5-3-10. Comb AGC adjustment

12. Comb Filter Adjustment (MA-6, YS-1 boards)
Mode: Record or E-E
Signal: Color bar
Oscilloscope: YS-1 pin (16)

[Adjustment method]
Minimize the residual chroma component by alternately adjusting YS-1 RV1 and MA-6 LV10. (See Fig. 5-3-11)

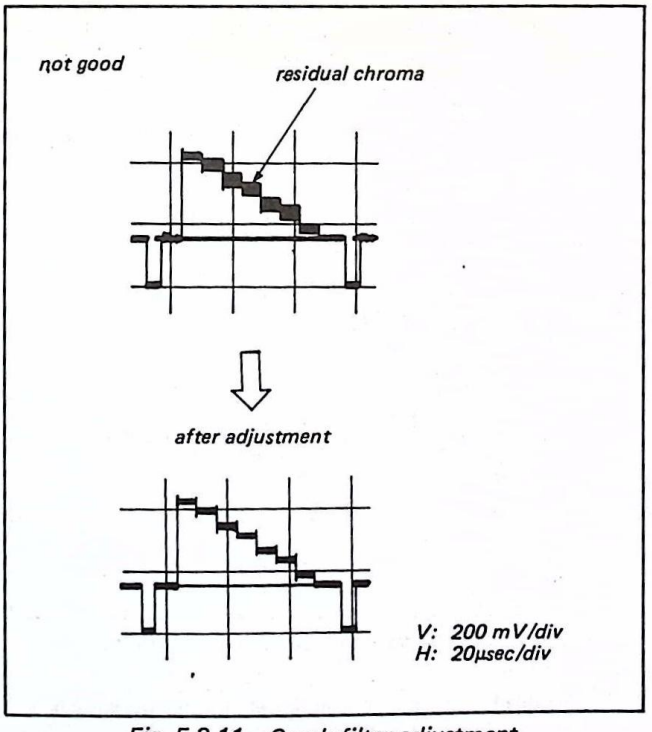

Fig. 5-3-11. Comb filter adjustment

13. Sync Tip Carrier Set Adjustment (MA-6 board)
Mode: Record or E-E
Signal: None
Frequency counter: TP102

[Adjustment method]
Adjust to 3.63 MHz ± 0.05 MHz with RV102. (See Fig. 5-3-12)

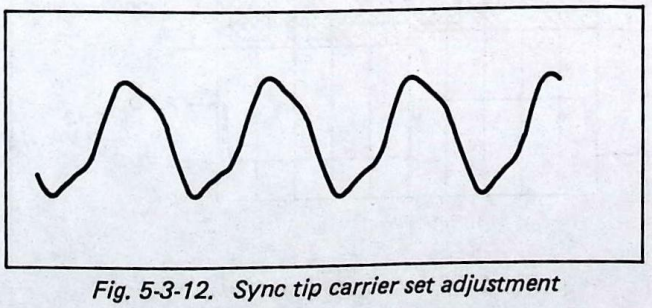

Fig. 5-3-12. Sync tip carrier set adjustment

14. Deviation Adjustment (MA-6, YM-1 boards)
- The playback adjustment system and the SYNC tip carrier set adjustment in Paragraph 13 above must be completed before making this adjustment.

Mode: βII self-recording and playback
Signal: Color bar
Oscilloscope: JG-1 pin (21)

[Adjustment method]
1) Set YM-1 RV2 to mechanical center position.
2) Check the playback output level with self recording and playback.
3) Turn RV2 counter clockwise (↺) as seen from the pattern side to bring the playback output level down to 1.95 Vp-p from above. When below 1.95 Vp-p, turn RV2 clockwise (↻) as seen from the pattern side.
4) Repeat self recording and playback until the playback output level reaches 1.95V ± 0.5 Vp-p. (See Fig. 5-3-13)

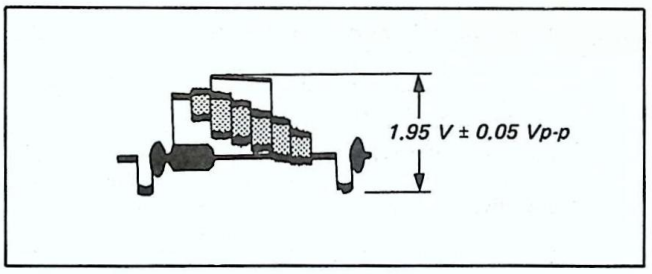

Fig. 5-3-13. Deviation adjustment

15. White Clip and Dark Clip Adjustment (MA-6 board)
Mode: Record or E-E
Signal: None
Digital voltmeter: See Fig. 5-3-14

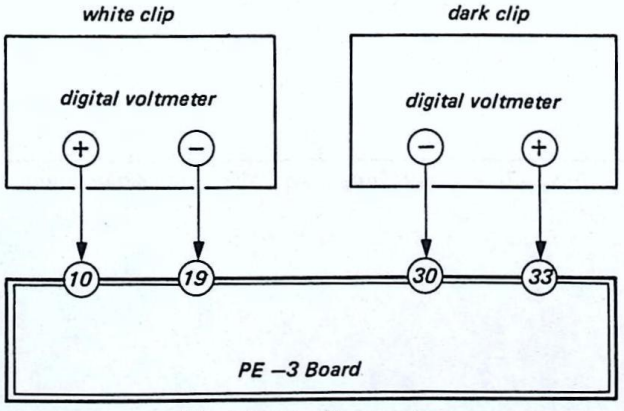

Fig. 5-3-14. Connection

Adjusting white clip: Adjust to 75 ± 10 mV with RV103.
Adjusting dark clip: Adjust to zero ± 10 mV potential difference with RV104.

16. Signal Recording Current Adjustment (MA-6, RP-11 boards)
Mode: Record
Note: Be careful to set to RECORD mode after first clearing the E-E mode when making this adjustment.
Signal: None RP-11 board check land No. 3
Oscilloscope: (D2 anode side)

[Adjustment method]
Adjust to 2.8V ± 0.1 Vp-p with MA-6 board RV106. (See Fig. 5-3-15).

Note: The CH-2 signal level shall be 3.2V ± 0.35 Vp-p.

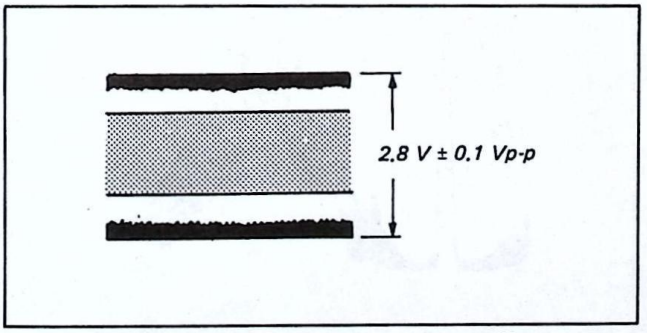

Fig. 5-3-15. Y Signal Recording current adjustment

17. Chroma Record Current Adjustment (MA-6 board)
Mode: Record
Signal: Color bar
Oscilloscope: Measure after connecting a filter

Measure after connecting a filter

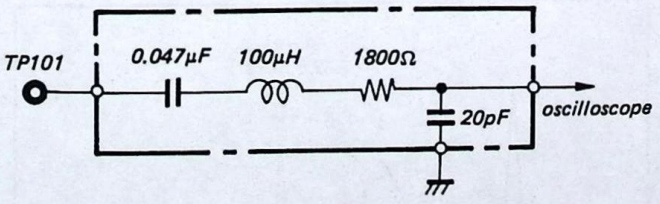

[Adjustment method]
Adjust the level of the color bar "red" to 200 mV ± 10 mVp-p with RV108. (See Fig. 5-3-16).

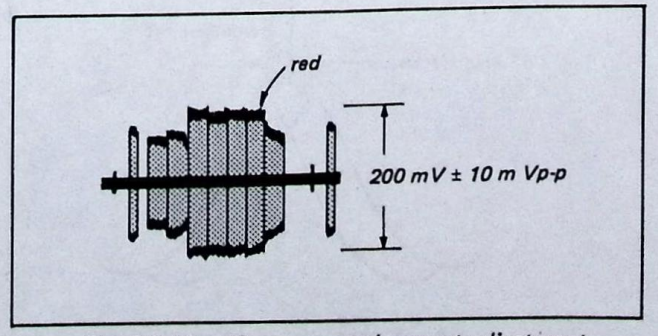

Fig. 5-3-16. Chroma record current adjustment

18. Deviation (MA-6, YM-1 boards)
Mode: EE
Signal: Color bar
Spectrun analyzer: MA-6 board CN2 pin (10)

Adjust YM-1 board RV2 so that sync tip is 3.57 MHz and white peak is 4.84 MHz, and deviation is 1.27 ± 0.05 MHz.

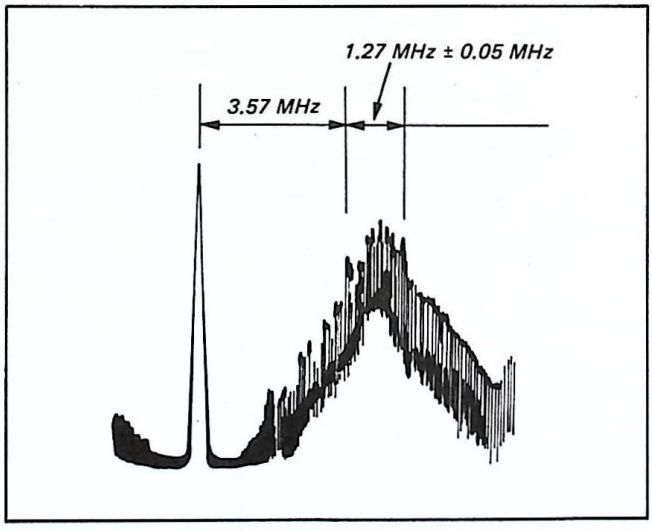

Fig. 5-3-17. Deviation

19. ½ H Shift (MA-6 board)
Mode: REC
Signal: None
Spectum analyzer: MA-6 board CN2 pin (10)

Adjust MA-6 board RV101 so that frequency fluctuation is 7.87 ± 1 kHz.

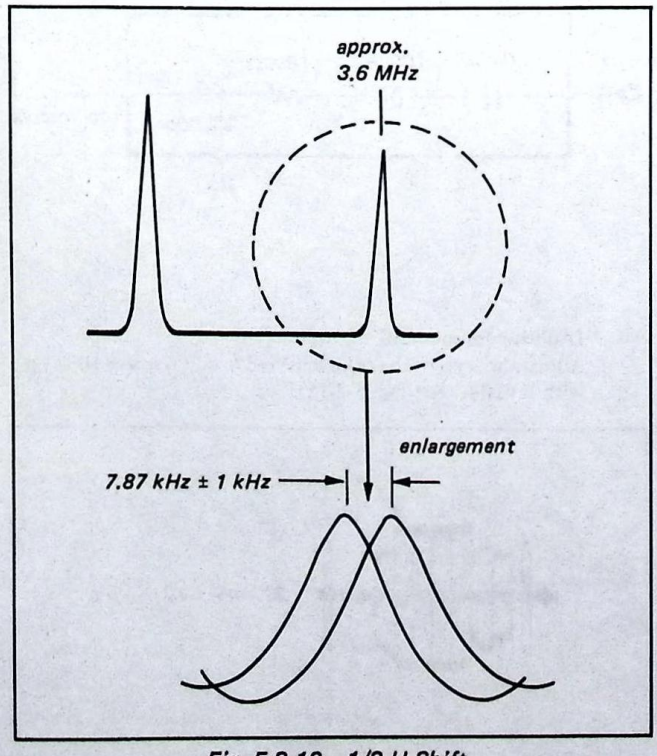

Fig. 5-3-18. 1/2 H Shift

20. Day/Time Insert Mix Level Adjustment
Mode: EE
Signal: Color bar
Oscilloscope: JG-1 board pin (21)

[Adjustment method]
Adjust MA-6 board RV109 so that day/time Y level is 95 ± 4 % relative to white (100 %) (See Fig. 5-3-19).

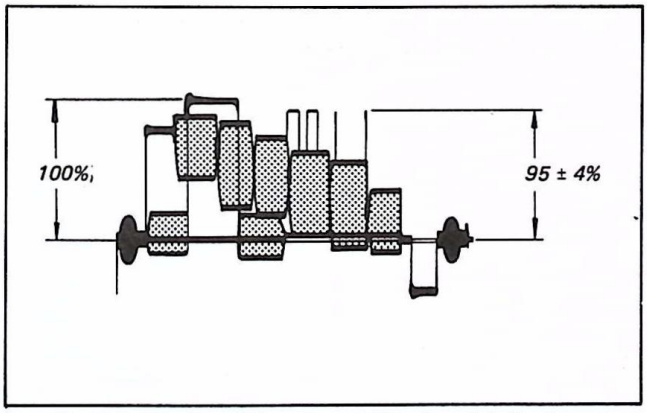

Fig. 5-3-19. Day/Time Insert Mix Level Adjustment

5-4. AUDIO SYSTEM ADJUSTMENT (MC-1 BOARD)

All adjustments of the audio system shall be made in the β III mode unless otherwise noted. Use a normal tape for adjustments.

[Connection of Related Equipment]

- When using AC-F1 (AC adapter)

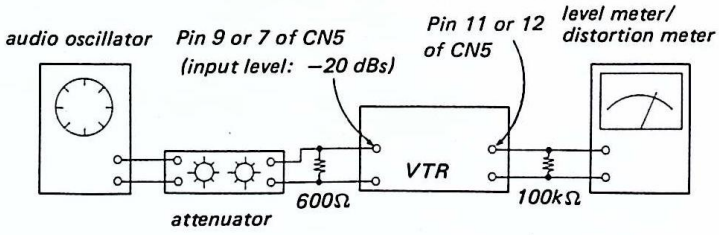

- When using TT-B5 (tuner/timer)

Note: Set the INPUT SELECT switch on LINE IN.

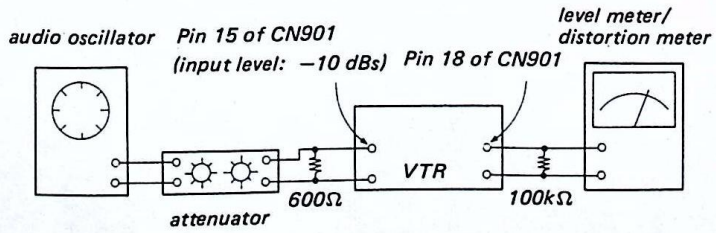

Note: TT-F1 can also be used.

[Adjustment Sequence]

1. ACE head adjustment . . . See "Mechanical Adjustment"
2. Playback frequency response adjustment
3. Playback output level adjustment
4. Bias oscillation frequency check
5. Bias trap adjustment
6. Record bias adjustment
7. Record level adjustment
8. Overall frequency response check
* 9. AGC output check
*10. Overall S/N check
*11. Overall distortion check

Note: The adjustment items marked * are for AC-F1 and TT-F1 for which the input level is different.

1. ACE Head Adjustment

Refer to "Mechanical Adjustment"

2. Playback Frequency Response Adjustment

(1) Play back 333 Hz and 5 kHz from the alignment tape and adjust so that the level difference between 333 Hz and 5 kHz is within + 1 dB - 2.5 dB with RV301.

3. Playback Output Level Adjustment

1) Play back 1 kHz from the alignment tape and adjust so that the output level is −5 dB with RV303.

4. Bias Oscillation Frequency Check

(1) Set the input signal level to zero and set up the REC-ORD mode.

(2) Connect a frequency counter to TP305. The reading should be 65 kHz ± 6.5 kHz. (See Fig. 5-4-1)

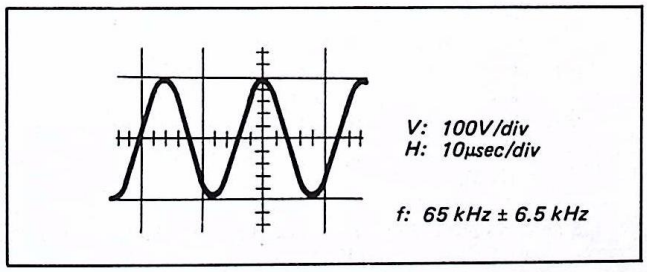

Fig. 5-4-1. Bias oscillator check

5. Bias Trap Adjustment

(1) Set the input signal level to zero and set up the REC-ORD mode.

2) Connect an oscilloscope to TP302.

3) Bias leak should be less than 150 mVp-p. (300 mVp-p for serial No. 209,001 and after) . (See Fig. 5-4-2)

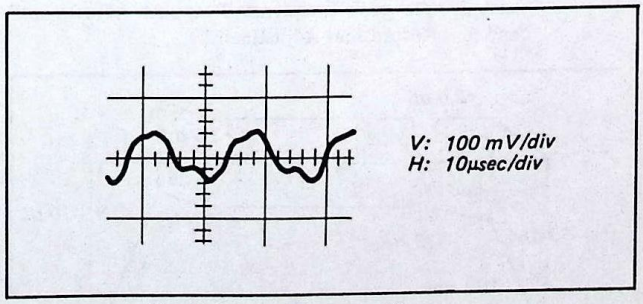

Fig. 5-4-2. Bias trap adjustment

6. Record Bias Adjustment

Check that "Playback frequency response adjustment" has been made.

1) Connect TP303 and TP301 (GND) with a jumper wire so as to turn off the AGC operation.

(2) Supply a 333 Hz signal.

(3) Set up the E-E mode and adjust the oscillator output level so that the level meter reading is −25 dB.

(4) Record signals.

(5) Supply a frequency of 7 kHz and perform Steps (3) and (4) above.

(6) Play back the recorded section of the tape and check that the output level at 7 kHz is +1.0 dB ± 2.5 dB relative to the output level at 333 Hz. If the level is outside this range, repeat Steps (2) through (5) adjusting with CV301 until the standard is met.

7. Record Current Adjustment

(1) Connect TP303 and TP301 (GND) with a jumper wire so as to turn off the AGC operation.
(2) Supply a 333 Hz signal.
(3) Set up the E-E mode and adjust the oscillator output level so that the level meter reading is −5 dB.
(4) Record signals.
(5) Play back the recorded section of the tape and check that the output level is −5 dB ± 1 dB. If the level is outside this range, repeat Steps (2) through (4) above adjusting with RV302 until the standard value is obtained.
(6) Check the record bias adjustment.
(7) Remove the jumper wire after making the adjustment.

8. Overall Frequency Response Check

(1) Supply a 333 Hz signal.l.
(2) Set up the E-E mode and adjust the oscillator output level so that the level meter reading is −25 dB.
(3) Record signals.
(4) Change the frequency to 50 Hz, 100 Hz, 7 kHz, 9 kHz and repeat Steps (2) and (3).
(5) Play back the recorded section of the tape and verify that the level is within the specification. (See Fig. 5-4-3).

Standard values: With reference to the 333 Hz playback output level.

50 Hz $^{+2.5}_{-13}$ dB

100 Hz $^{+2.5}_{-5}$ dB

7 kHz $^{+3.5}_{-1.5}$ dB

9 kHz $^{+2.5}_{-15}$ dB

(6) If the specified values cannot be attained, perform 2 again. "Playback Frequency Response Adjustment" and 6. "Record Bias Adjustment".

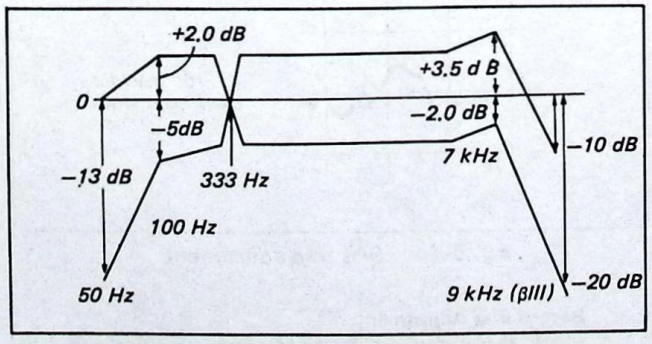

Fig. 5-4-3. Overall frequency response

9. AGC Output Check

(1) Connect a 333 Hz signal at −20 dBs for AC-F1 and at − 10 dBs for TT-B5.
(2) Record signals.
(3) Play back the recorded section of the tape and check that the output level is −5 dB ± 2 dB.

10. Overall S/N Check

(1) Set the input signal level to zero and record signals.
(2) Supply a 333 Hz signal at −20 dBs for AC-F1 and at − 10 dBs for TT-B5.
(3) Record signals.
(4) Play back the recorded section of the tape and check that the output level difference is greater than 40 dB.

11. Overall Distortion Check

(1) Supply a 400 Hz signal at −20 dBs for AC-F1 and at −10 dBs for TT-B5.
(2) Record signals.
(3) Play back the recorded section of the tape and verify that the distortion is below 4 %.

SECTION 6
OPERATION
(Projector:FP-60/62)

This section-6(operation) will be issued supplement.

TABLE OF CONTENTS

Section	Title	Page
I.	**OUTLINE OF INDEXTRON**	6-1
1.	Principles of Color Output by One Beam	6-1
2.	Control Method by Index Signal	6-1
3.	Main Features of INDEXTRON	6-3
3-1.	High Definition Electron Gun	6-3
3-2.	Impregnated Cathod	6-3
3-3.	Index Phosphors	6-3
3-4.	High Brightness Phosphor	6-3
3-5.	High Speed and Low Noise Photodetector	6-3
3-6.	Other Features	6-3
4.	Main Specification of INDEXTRON	6-3
II.	**INDEX SIGNAL PROCESSING CIRCUIT**	6-6
1.	PLL	6-6
2.	Run In Period	6-11
3.	Video Stop and White Stop	6-12
4.	Start Set Pulse	6-13
5.	H. SIZE Stabilization Circuit	6-14
6.	Focus Marker	6-15
III.	**CHANNEL SELECTOR**	6-17
1.	Name and Function of Each Terminal of IC1101 (CX520-108N)	6-19
2.	Remote Control Section	6-20
2-1.	SIRCS INPUT ((31) Pin)	6-20
2-2.	KEY INPUT ((38) , (39) & (16) Pins)	6-20
2-3.	CATV SW INPUT ((41) Pin)	6-20
2-4.	POWER KEY INPUT ((37) Pin)	6-20
2-5.	SOUND OUTPUT and PICTURE OUTPUT ((18) & (17) Pins)	6-21
3.	Channel Selector Section	6-21
3-1.	SERIAL DATA OUTPUT and SERIAL CLOCK OUTPUT ((5) & (7) Pins)	6-21
3-1-1.	Data of R. D.	6-21
3-1-2.	DATA of P. D.	6-22
3-2.	PLL LATCH OUTPUT ((9) Pin)	6-22
3-3.	FM TRAP OUTPUT ((10) Pin)	6-23
3-4.	BAND OUTPUT ((1) & (12) Pins)	6-23
3-5.	Table of Frequency Data for Each Channel	6-24
4.	CRT Display Section	6-27
4-1.	Name and Function of Each Terminal of IC1102 (CX7958)	6-27
4-2.	Function of IC1102 (CX7958)	6-29
4-2-1.	Function of Displaying	6-30
4-2-2.	Interface Function	6-35
4-3.	Actual CRT Display	6-39
5.	Memory Section	6-39
5-1.	DATA TRANSFER	6-40
5-2.	Contents of MEMORY	6-42
6.	Others	6-42
6-1.	RESET INPUT ((3) Pin)	6-42
6-2.	V. PULSE INPUT ((4) Pin)	6-42
6-3.	H. SYNC INPUT ((8) Pin)	6-42
6-4.	CHIP SELECT OUTPUT ((22) Pin)	6-42
6-5.	BLANK OUTPUT ((24) Pin)	6-42

Section	Title	Page
6-6.	AFT-UP/DN INPUT (33) & (32) Pins)	6-42
Ⅳ.	VIF/SIF SECTION	6-43
1.	VIF Amp Circuit	6-45
2.	VIF AGC Drive Circuit	6-45
3.	Video Detection Circuit	6-45
4.	IF AGC Amp Circuit	6-46
5.	RF AGC Amp Circuit	6-46
6.	AFT Circuit	6-46
7.	SIF Limiter Amp	6-46
8.	FM Detector Block	6-46
9.	Volume Control Amp	6-46
Ⅴ.	KEY CONTROL BLOCK	6-48
1.	10-Key Circuit	6-49
1-1.	Initial State	6-49
1-1-1.	Initialized IC State	6-49
1-1-2.	Clearing Initial State	6-49
1-1-3.	Shifting to Initial State	6-49
1-2.	Switching ON Detection (Ready to Input)	6-50
1-2-1.	When One Switch is Turned On	6-50
1-2-2.	Example of ORing	6-50
1-2-3.	Shifting to Ready to Input State	6-50
1-2-4.	Clearing Ready-to-input State	6-50
1-3.	Key Matrix Output Terminal Output Waveform	6-51
1-3-1.	Initial State and Ready-to-input State	6-51
1-3-2.	Key Reading State	6-51
1-4.	Key Reading State	6-51
1-4-1.	Identifying Keys (Normal Reading)	6-51
1-4-2.	Fault Reading	6-52
1-4-3.	Exceptions to Double Keying	6-52
1-5.	Output Waveform	6-54
1-5-1.	Modulation Carrier 40kHz	6-54
1-5-2.	Time Definition	6-54
1-5-3.	Output Waveform	6-55
1-5-4.	Output Data	6-57
2.	ALAR CIRCUIT	6-57
Ⅵ.	SIGNAL SWITCHING BLOCK	6-58
Ⅶ.	AUDIO AMP BLOCK	6-60
Ⅷ.	Y CHROMA SIGNAL PROCESSING CIRCUIT	6-61
1.	Function	6-61
2.	Flow of Y Signal	6-61
3.	Flow of CHROMA Signal	6-62
Ⅸ.	DEFLECTOR SYSTEM PROCESSING CIRCUIT	6-64
1.	Description of CX20013A Operation	6-64
1-1.	Sync Separator Circuit	6-64
1-2.	AFC Circuit	6-64
1-3.	VCO	6-65
1-4.	Horizontal Count-down Circuit	6-65
1-5.	Vertical Count-down Circuit	6-66
1-6.	Vertical Amp	6-68
2.	Horizontal Output Circuit	6-68
3.	Vertical Output Circuit	6-69
Ⅹ.	LINEARITY CORRECTION CIRCUIT	6-70
1.	Linearity Correction Loop	6-70
2.	Memory Loop	6-71
Ⅺ.	MOTOR DRIVE CIRCUIT (LENS FOCUS)	6-72
Ⅻ.	HIGH-TENSION CONTROL CIRCUIT	6-73
1.	High-Tension Unit	6-73
2.	Control Unit	6-75
ⅩⅢ.	DYNAMIC FOCUS CIRCUIT	6-76
ⅩⅣ.	POWER SUPPLY CIRCUIT (Y-Z Power Supply)	6-77
1.	Noise Filter	6-77
2.	Converter Circuit	6-77
3.	Y-Z Power Supply Circuit	6-77
4.	Control Circuit	6-79
5.	Protection Circuit	6-79

I. OUTLINE OF INDEXTRON

1. Principles of Color Output by One Beam

In color CRTs used in ordinary color TV sets, three beams simultaneously scan R, G, and B phosphors. For this reason, CRTs contain a color discrimination mechanism so that these beams do not scan phosphors of other colors. Video projectors require a very high brightness as the output from the CRT is enlarged by a lens and is projected on a screen to view pictures on the screen. With conventional CRTs of color TV sets, the beam utilization ratio is low due to the color discrimination mechanism which deforms by heat when a larger beam current is flowed to increase the brightness, and it has been difficult to increase the brightness. Conventional projectors have single color tubes without a color discrimination mechanism, and a high brightness is obtained by outputttting using three CRTs for three colors of R, G, and B.

FP-60 presents a single-tube projector by using the INDEXTRON, a one-beam system CRT without a color discrimination mechanism, as a CRT to increase the brightness. To accomplish this feast, a device to output three colors of R, G, and B using only one beam is needed. In the three beam system, the color discrimination mechanism makes it certain that a red phosphor, for example, is hit only by a red beam. In the one beam system, no color discrimination mechanism is used, and one beam sequentially scans R, G, and B as in R.G.B.R.G.B. . . . As shown in Fig. I-1, the single tube projector switches color signals input to the CRT (G1) in the sequence of RGB also matching scanning of R, G, and B phosphors by one beam. Thus, one beam can output three colors by switching color signals for the three colors to phosphors of the three colors.

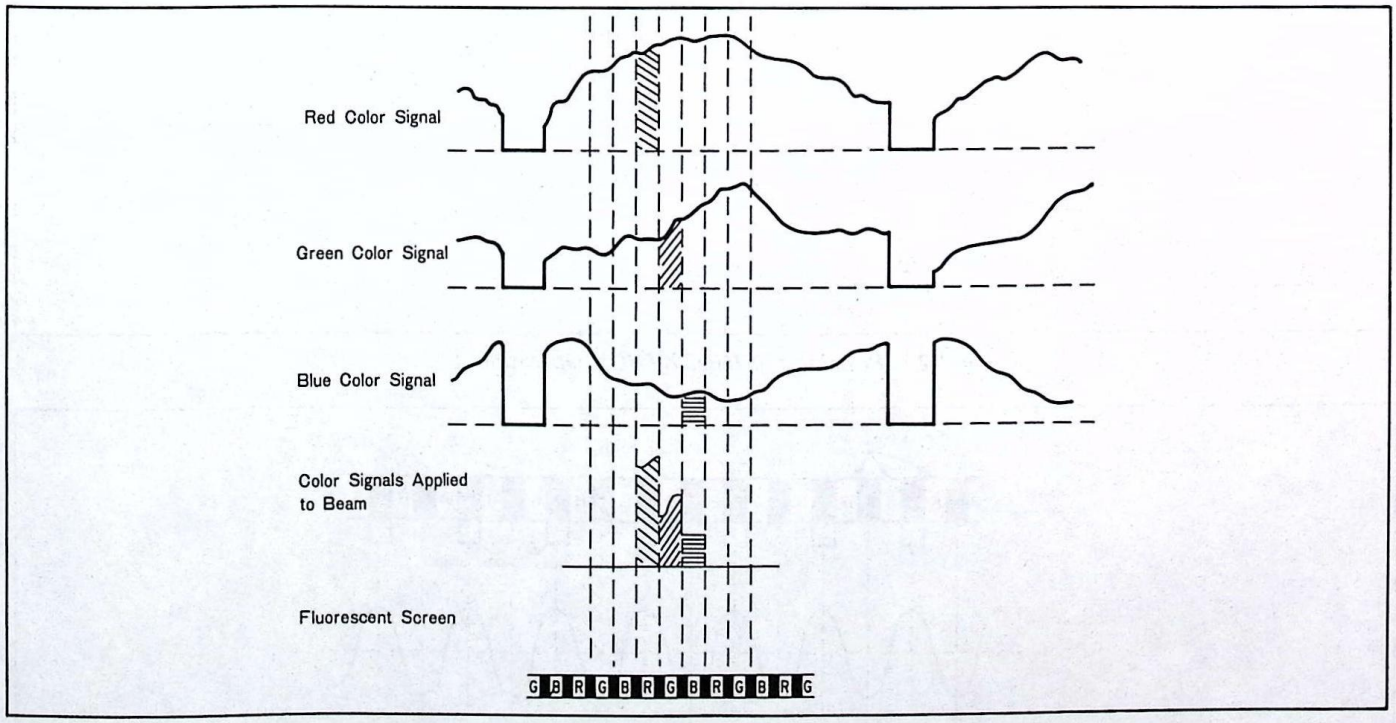

Fig. I-1.

2. Control Method by Index Signal

As mentioned earlier, the INDEXTRON projector requires switching of color signals input to the CRT matching the scanning of the fluorescent screen by a beam. To make this color signal switch, the exact scanning position of the beam on the fluorescent screen has to be determined.

As shown in Fig. I-2, index stripes are coated on the back side of the carbon stripes on the fluorescent screen of the INDEXTRON projector. An index stipe emits a green light when an electron beam hits it. It emits a green light only when a beam hits this index stripes while a beam sequentially scans the screen. This green light is called an index light signal. By detecting these index light signals and by counting them, the exact scanning position of the beam can be determined. The detector windows mounted on both left and right sides of the CRT detect index light signals. The CRT glass is transparent where these detector windows are provided allowing index light signals to be detected from the outside of the CRT.

Index stripes are coated on every other carbon stripes, and green lights emitted by them are detected by a photodiode through the detector windows. By multiplying the waveform of a constant frequency (f_i) by two, the timing can be matched to that of R, G, and B of phosphors. This $2f_i$ is divided equally into three and is assigned to R, G, and B to switch color signals input to the CRT.

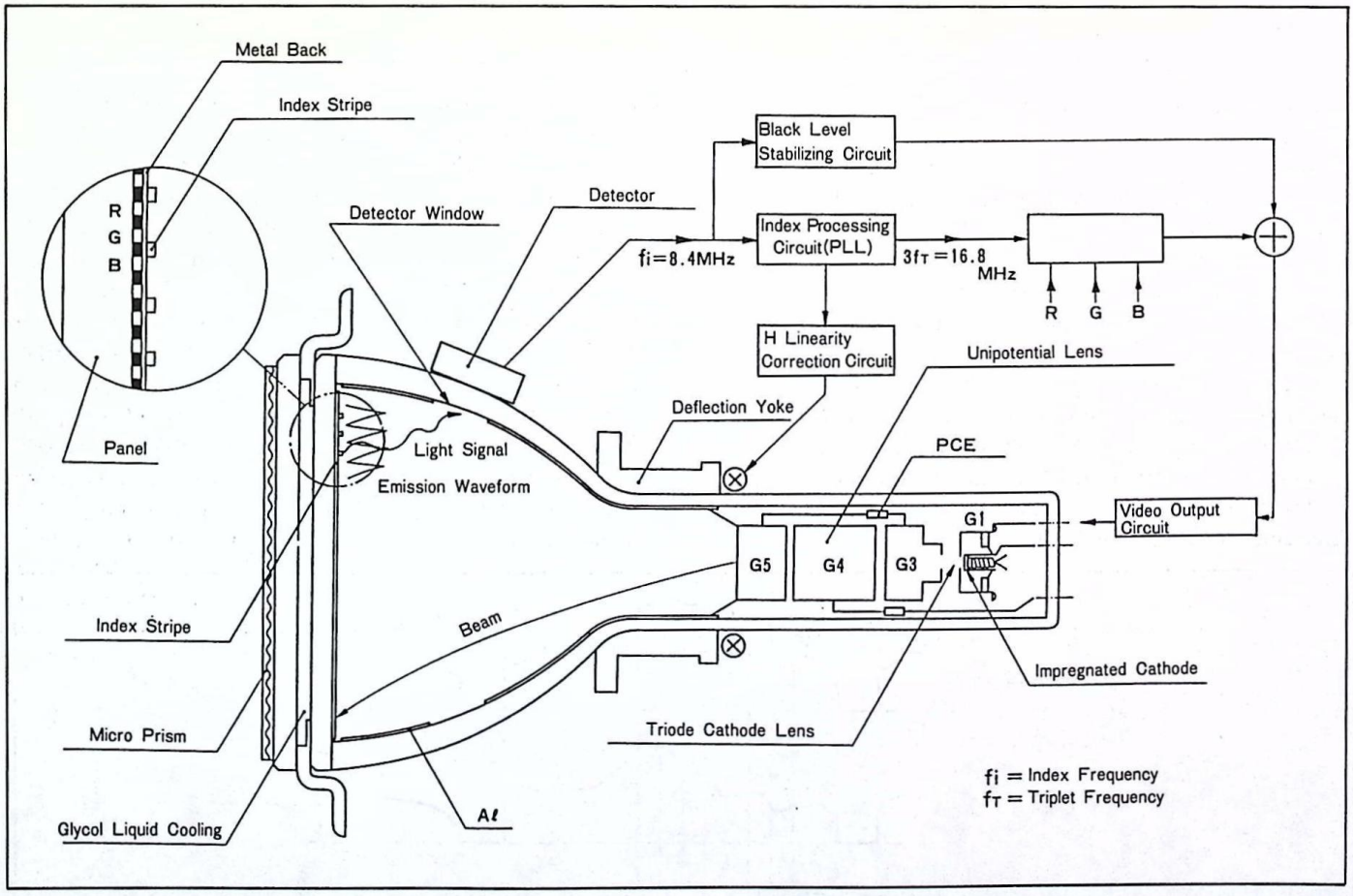

Fig. I-2. Principles of INDEXTRON Operation

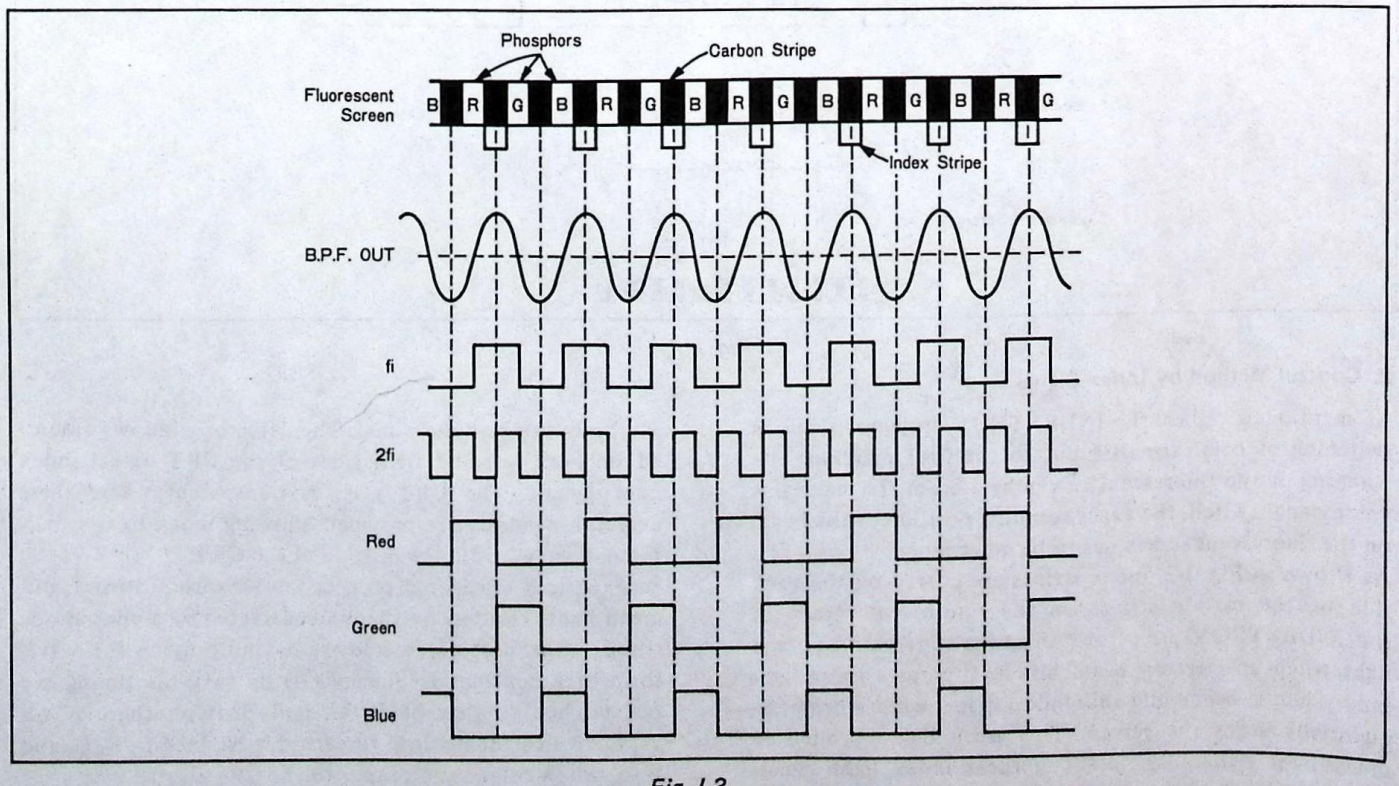

Fig. I-3.

3. Main Features of INDEXTRON

3-1. High Definition Electron Gun

In principle, the beam index tube demands an extremely thin electron beam. The INDEXTRON uses a large-diameter unipotential lens to greatly reduce the focusing distortion (aberration) and triode cathode lens without a G_2 electrode to improve the stability of very fine spots.

As a result, the beam spot width throughout the screen could be reduced to less than 0.2mm (on a cathode current of 2mA). This could be achieved in conjunction with a high performance deflection yoke.

The electron gun has a peak current equalizer (PCE) to increase its dielectric strength.

3-2. Impregnated Cathode

Generally, a G_1 electrode with a very small hole is used to obtain a very small electron beam spot. However, the cathode load is high, and the life is short with a conventional oxide cathode. SONY has developed a new type of impregnated cathode sintering tungsten powders which is used to lengthen the life of the electron gun in a high current density.

3-3. Index Phosphors

The index tube requires phosphors with a short afterglow and high luminous brightness. SONY has developed an index phosphor that sufficiently emits a light even in a dark part of the picture and has a short afterglow duration. This phosphor emits green which matches the sensitivity of the photodetector.

3-4. High Brightness Phosphor

As the green phosphor of INDEXTRON, a new YAG (yttrium-aluminum-garnet) phosphor is used. The new phosphor excels in temperature and current brightness saturation characteristics.

3-5. High Speed and Low Noise Photodetector

A newly-developed high speed and low noise photodetector (CX20190) is used to detect index signals.

3-6. Other Features

- Micro Prism: A new optical device, Micro Prism, has been developed to make vertical stripes of RGB (red, green, and blue) thinner. The prism consists of two plastic prism layers with different refractive indexes between the projection lens and panel front face.
- Tube Surface Liquid Cooling: The tube face (panel) is cooled by a liquid (glycol) to make the temperature difference on the panel uniform.
- New Deflection Yoke

  A high precision deflection yoke that minimizes spot distortion is used.

  To fully utilize the performance of the INDEXTRON, the following circuits are incorporated.

  (a) Color discrimination circuit using PLL (phase locked loop)

  Index signal variations are quickly responded to and followed to obtain stable color discrimination by using a high speed response PLL in the color discrimination circuit.

  (b) Index signal stabilization circuit

  Index signals are stabilized by using a feedback loop of the black level to obtain correct color pictures.

  (c) Linearity correction circuit using a CCD 1H delay line

  Horizontal deflection distortion is removed by using a feedback loop using a CCD 1H delay line based on information obtained by the high speed response PLL in order to reproduce stable color pictures.

4. Main Specification of INDEXTRON

Tube type	7-inch high brightness index tube
Deflection angle	75°
Neck diameter	36.5ϕ
Fluorescent screen pitch	0.42mm
No. of RGB trios	256 lines
Total length	275mm
Electron gun	Longitudinally long beam is used. Triode cathode lens Hi-unipotential main lens
Cathod	Impregnated cathode
Cooling system	Liquid cooling
Index system	Green light index system
Index frequency	8.4MHz
Peak brightness	1600 Ft-L

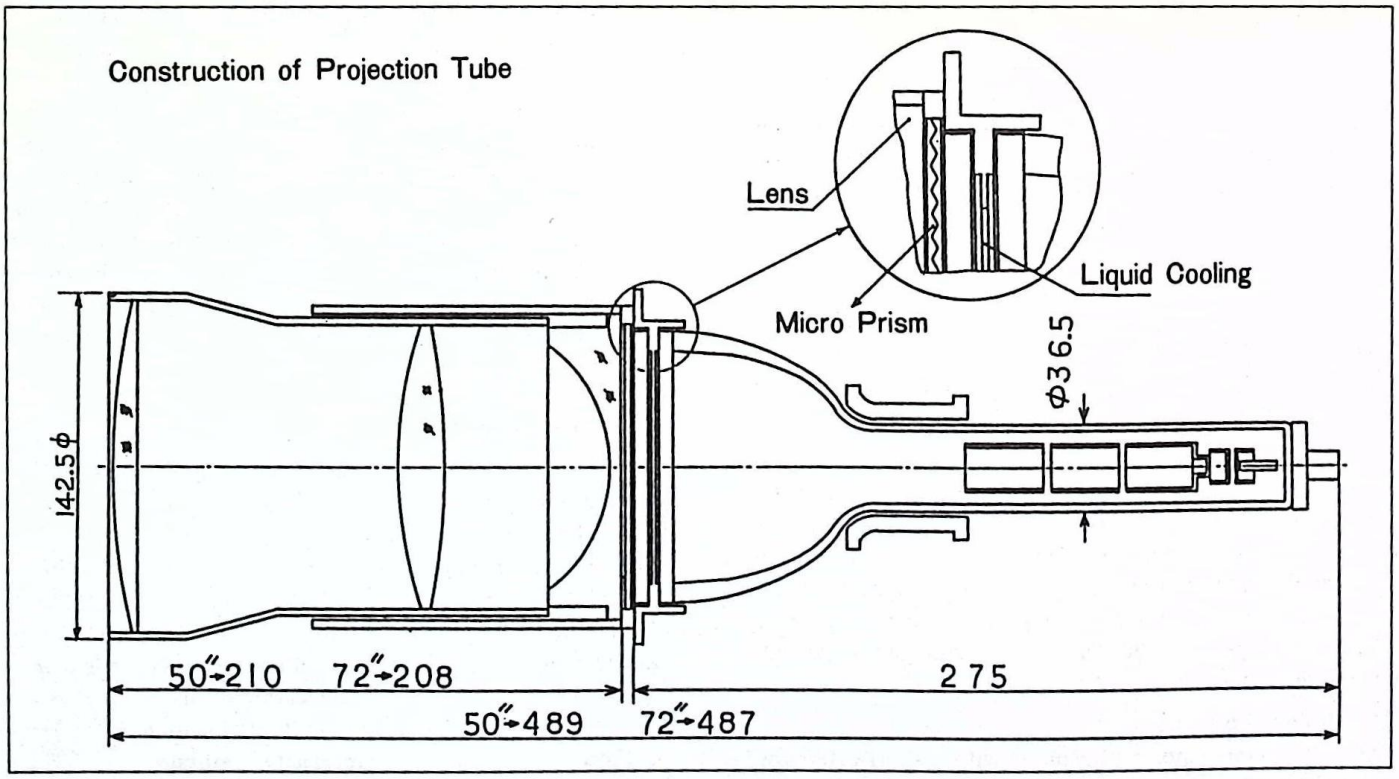

Fig. I-4.

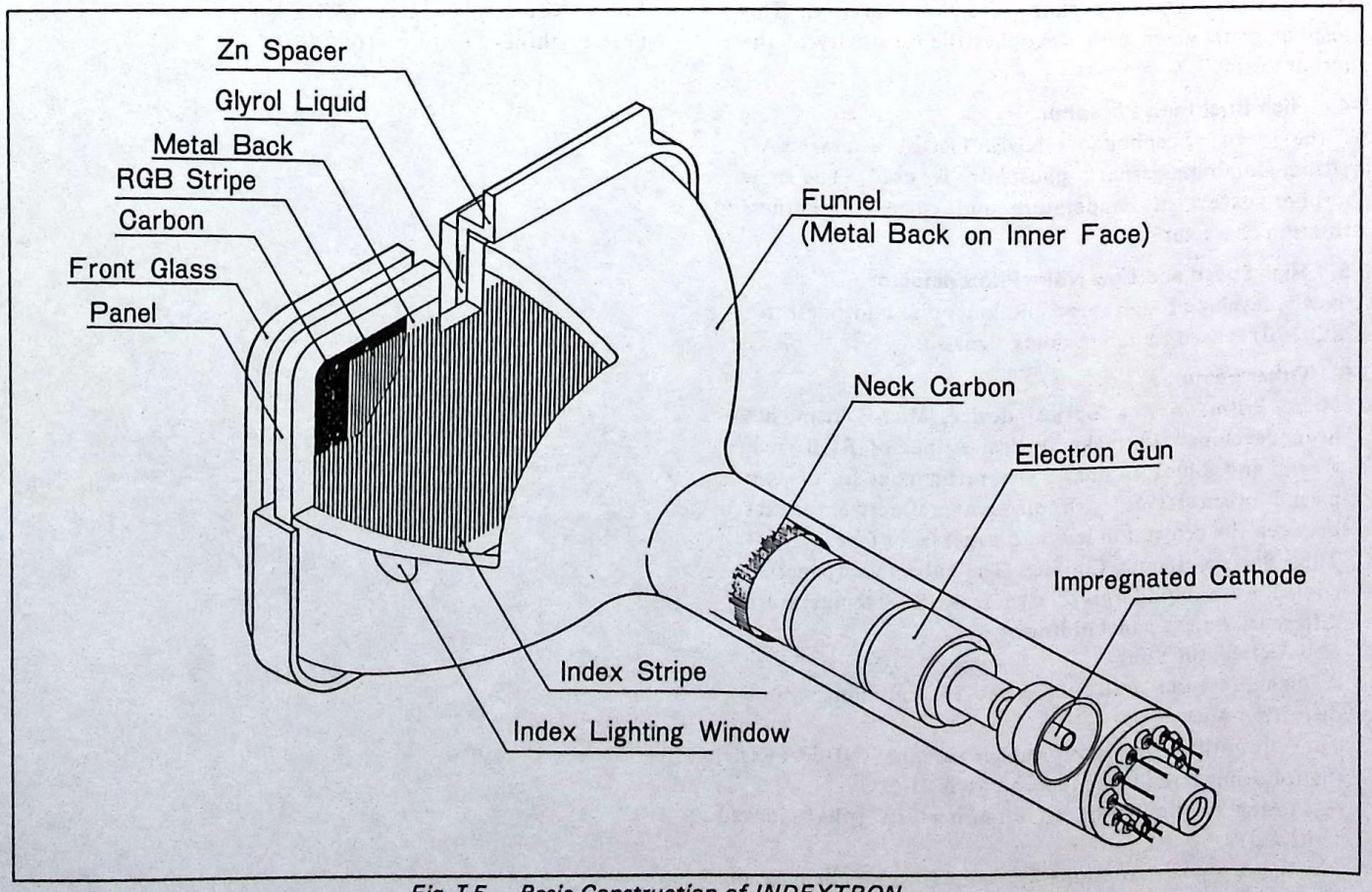

Fig. I-5. Basic Construction of INDEXTRON

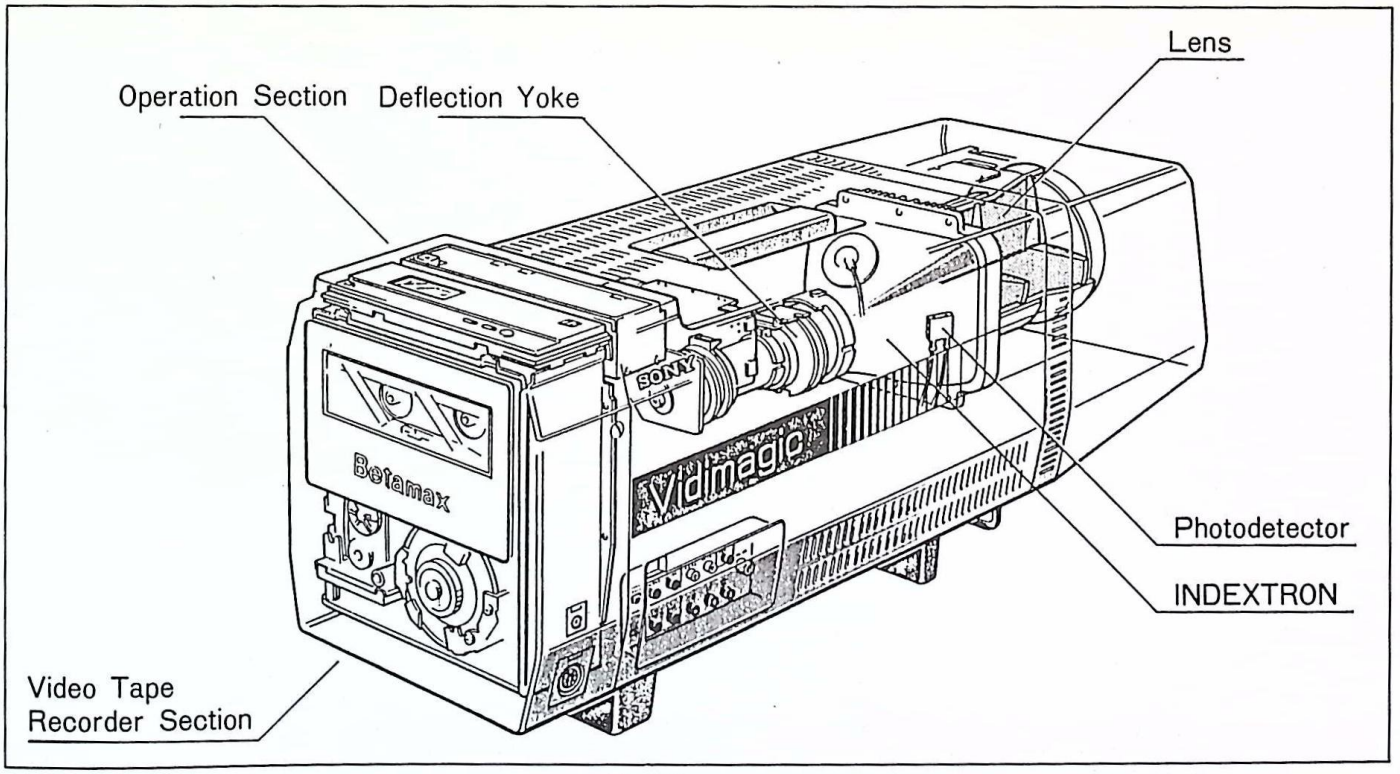
Lens
Operation Section
Deflection Yoke
Photodetector
INDEXTRON
Video Tape
Recorder Section
SONY
Betamax
Vidmagic

Fig. I-6.

II. INDEX SIGNAL PROCESSING CIRCUIT

As mentioned earlier, the INDEXTRON switches the RGB color signals in accordance with the detector output. Based on this concept, the circuits used in the INDEXTRON tube are described below.

Fig. II-1 shows the block diagram of the index signal processing circuit (BB Board).

The detector output becomes constant frequency output as the index stripes are provided in the fixed positions of the screen. The frequency (f_i) of it is 8.4MHz in FP-60A/60, and this frequency is the basis of index signals. (See Fig. II-2.)

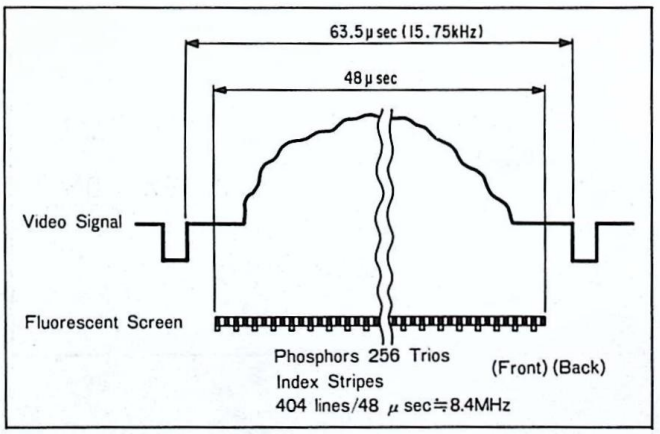

Fig. II-2.

1. PLL

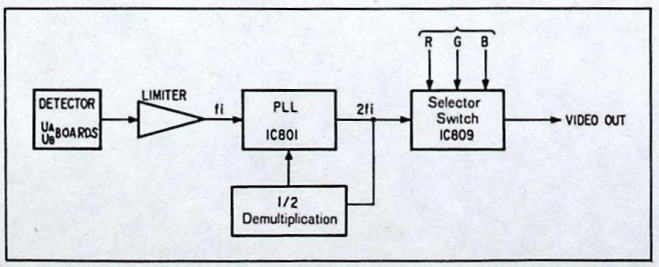

Fig. II-3.

As the main current of the index signal processing circuit, an 8.4MHz signal (f_i) output by the detector is used as a basis to operate the PLL at a frequency ($2f_i$) twice that of it, and $2f_i$ is equally divided by three to switch R, G, and B.

① The photodetector output (f_i) from the UA and UB Boards is first fed to 5.7 and 11.4MHz traps. The frequencies 5.7 and 11.4MHz are 2/3 and 4/3 times 8.4MHz. Index signals are output by a beam that is emitted to illuminate phosphors, and the beam intensity also changes the index signal output. For example, when output is made to illuminate the entire screen only in red, a strong beam hits only on red phosphors. The detector also picks up this strong beam component as well, in addition to the index signal. This is 5.7MHz. When a strong beam is output to all the phosphors (all white screen), the 11.4MHz component is picked up. Therefore, the photodetector output is first fed to the 5.7 and 11.4MHz traps and then to an 8.4MHz BPF to pick up only the 8.4MHz signal (f_i), which is the index signal.

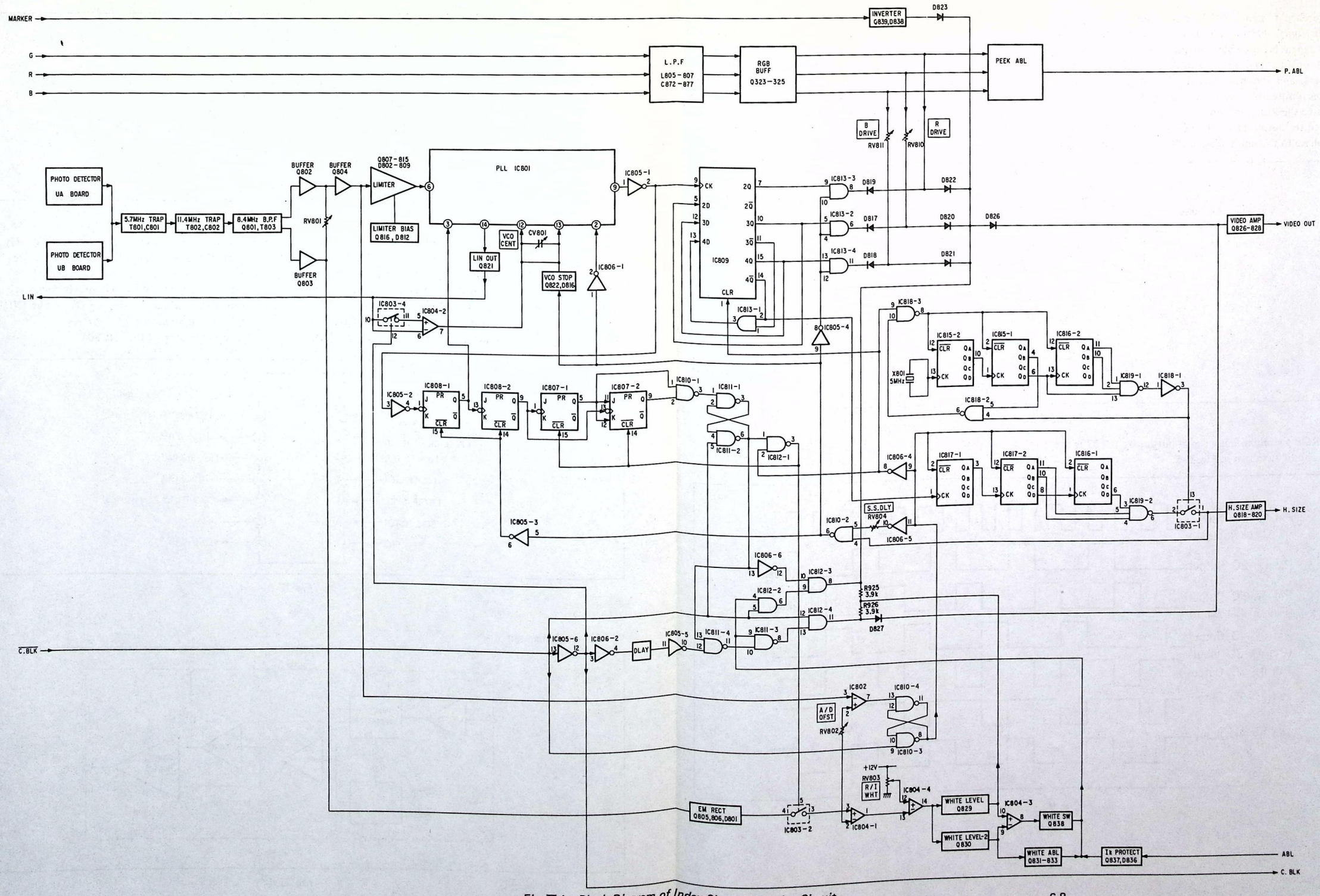

Fig. II-1 Block Diagram of Index Signal Processing Circuit

PJ OPERATION

② The fetched f_i signal is fed to the limiter. The level of the index signal differs near the center and periphery of the CRT depending on where the photodetector is mounted and CRT profile. The beam output also differs depending on pictures, and the index signal level varies. The signal is fed to the limiter to correct it and to make the level of the input to the PLL constant.

③ The limiter output is input to Pin ⑥ of the PLL. Matching the phase to the input f_i signal, the PLL outputs a signal of a frequency twice f_i, that is, 16.8MHz. The $2f_i$ output is JK flip flopped, is demultiplied 1/2 by IC808-1, and is fed back to the PLL for phase comparison.

④ This $2f_i$ signal is input to IC809 which contains four D flip flops. The $2f_i$ signal is input to this IC as its clock. The input signal is divided equally by three by a circuit as shown in Fig. II-4 to produce an RGB switching pulse. Fig. II-5 shows the output waveforms of them.

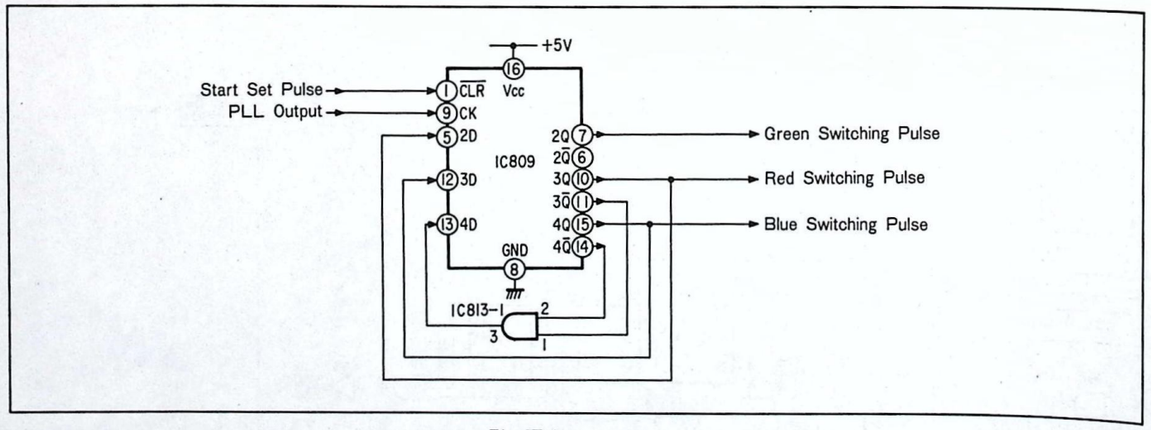

Fig. II-4.

⑤ The RGB switching pulse signal output by IC809 is then fed to a circuit as shown in Fig. II-5.

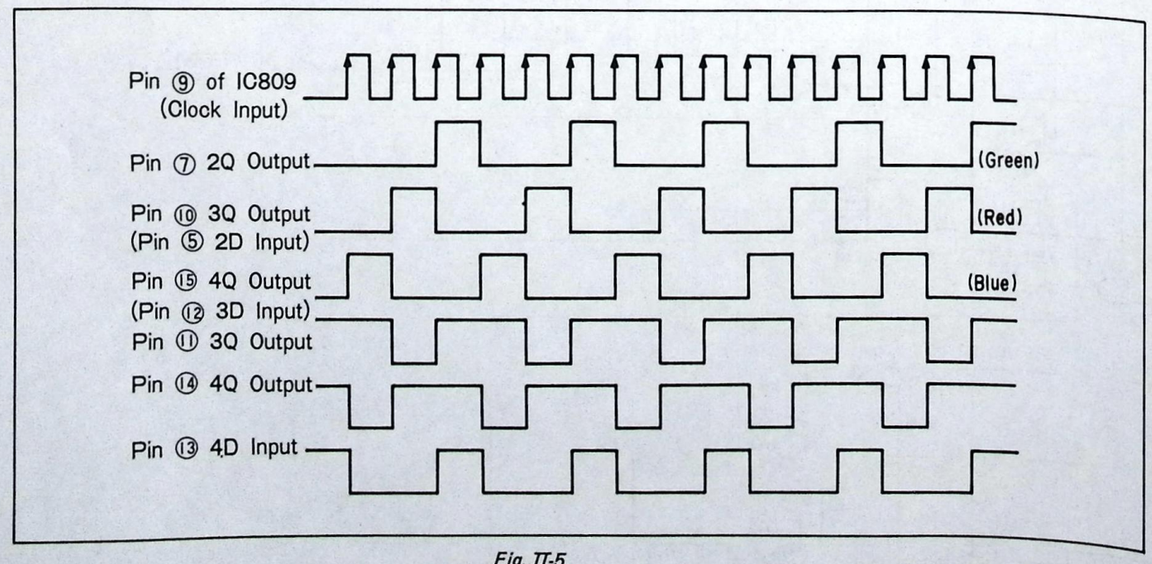

Fig. II-5.

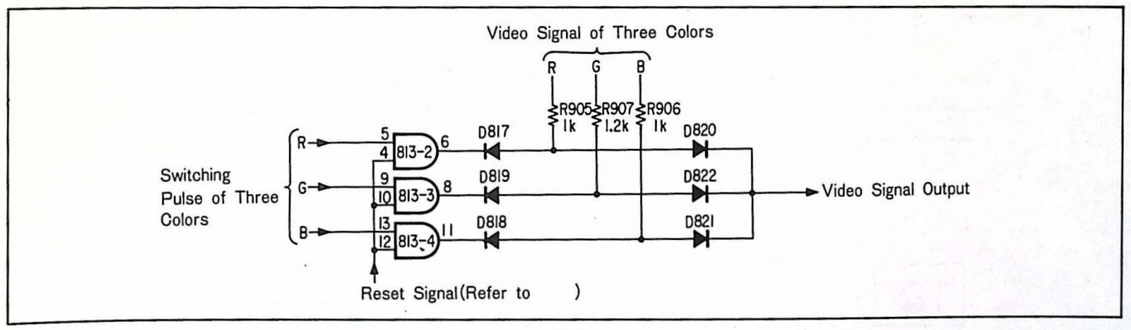

Fig. II-6.

For example, when the levels of the reset signal and red switching pulse are "H" and "L", respectively, D817 is switched ON, and the red video signal arriving from the top of the diagram does not flow toward D820. When the level of the red switching pulse is "H", D817 is switched OFF, and the red video signal is output to VIDEO OUT through D820. The green and blue signals are processed similarly.

The video signals of these colors are output only when the levels of the switching pulses of these colors are "H", and R, G, and B are sequentially switched.

The video signals for the R, G, and B colors are integrated into one signal, which is input to G1 of the INDEXTRON through a video amplifier.

○ Pin configuration of PLL (IC801)

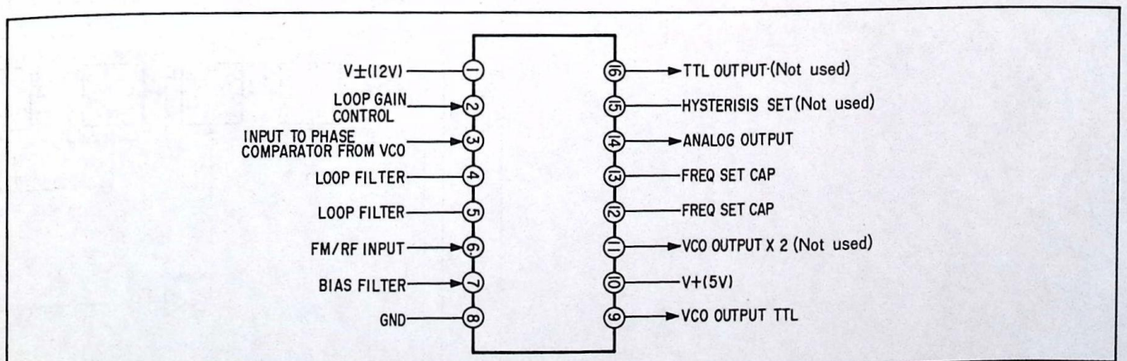

Fig. II-7.

○ PLL block diagram

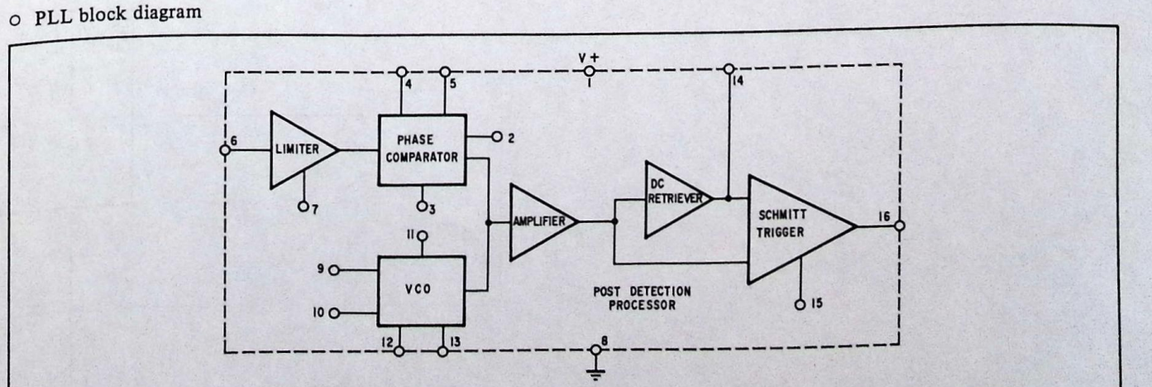

Fig. II-8.

2. Run-In Period

The PLL has to be already in stable operation when effective pictures are started. The index stripes are aligned longitudinally in fixed intervals. Therefore, the frequency is constant for each line. However, the phase is not unknown for each line. The phase has to be matched before signals enter the effective pictures of each line. The PLL is stopped during 1H line of blanking and is stabilized after blanking and before effective pictures are shown. This period is called a run-in period. Without this run-in period, the pictures are disturbed and colors become odd after effective pictures are shown and before the PLL stabilizes. As shown in Fig. II-9, the run-in period is the scanning period of the part of the fluorescent screen of the CRT that do not have phosphors yet and before the display period. The run-in period has ten index stripes. The PLL is stabilized while these ten stripes are scanned for each line so that the PLL is completely stable when effective pictures are shown.

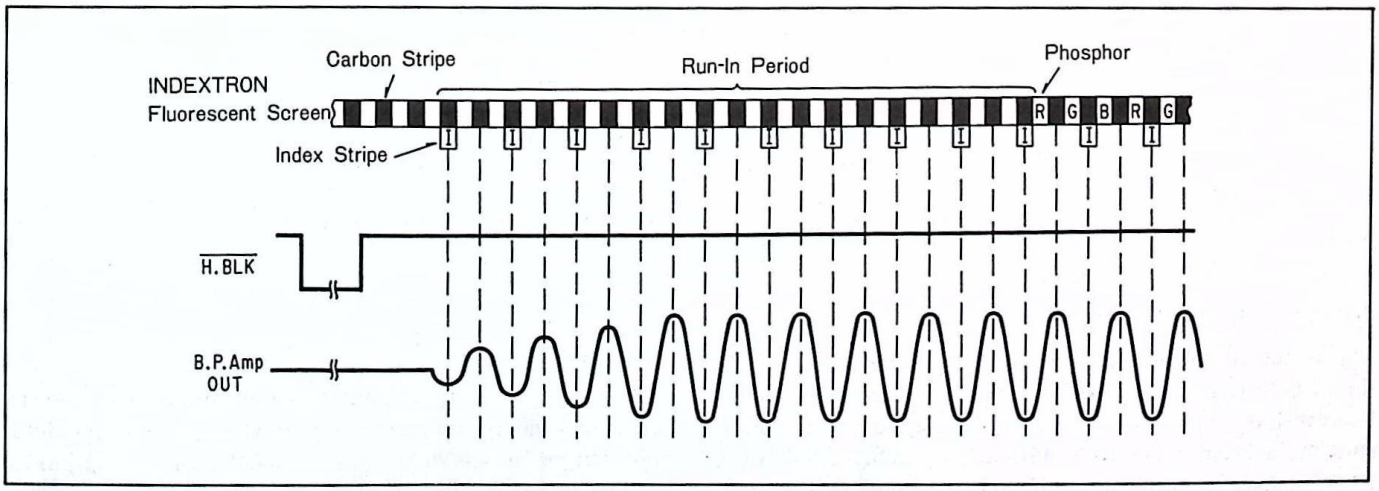

Fig. II-9.

Part of this run-in period is used as a sampling period to sample the index signal and to adjust the white level. This sampling period is decided by the J-K flip flop near the center of Fig. II-1. Fig. II-10 and II-11 show the circuit diagram of that portion and timing chart of them, respectively.

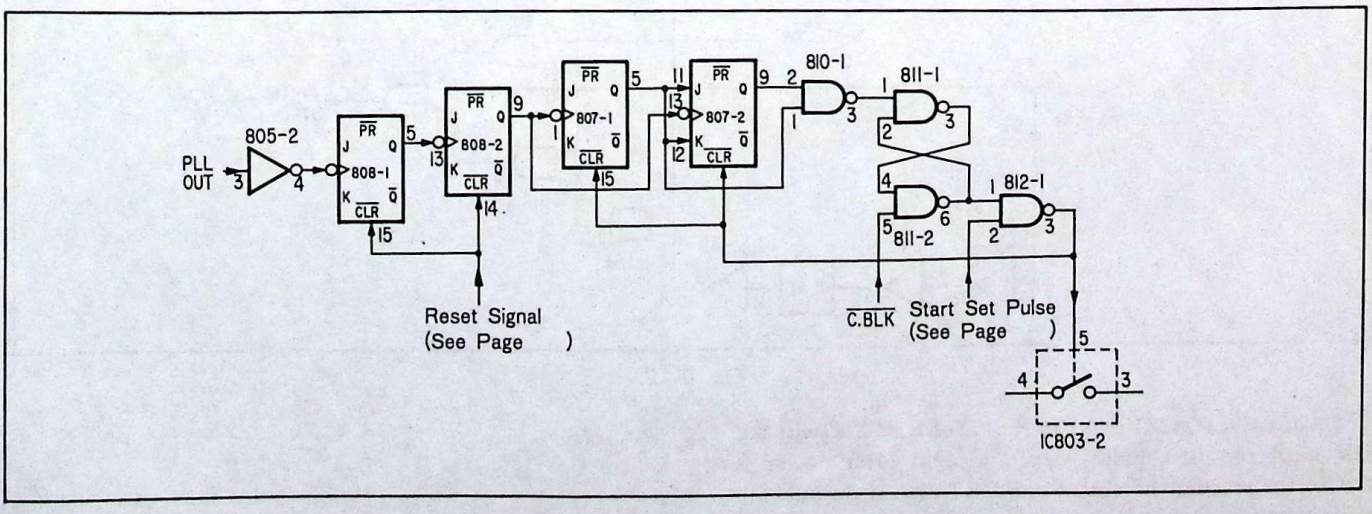

Fig. II-10.

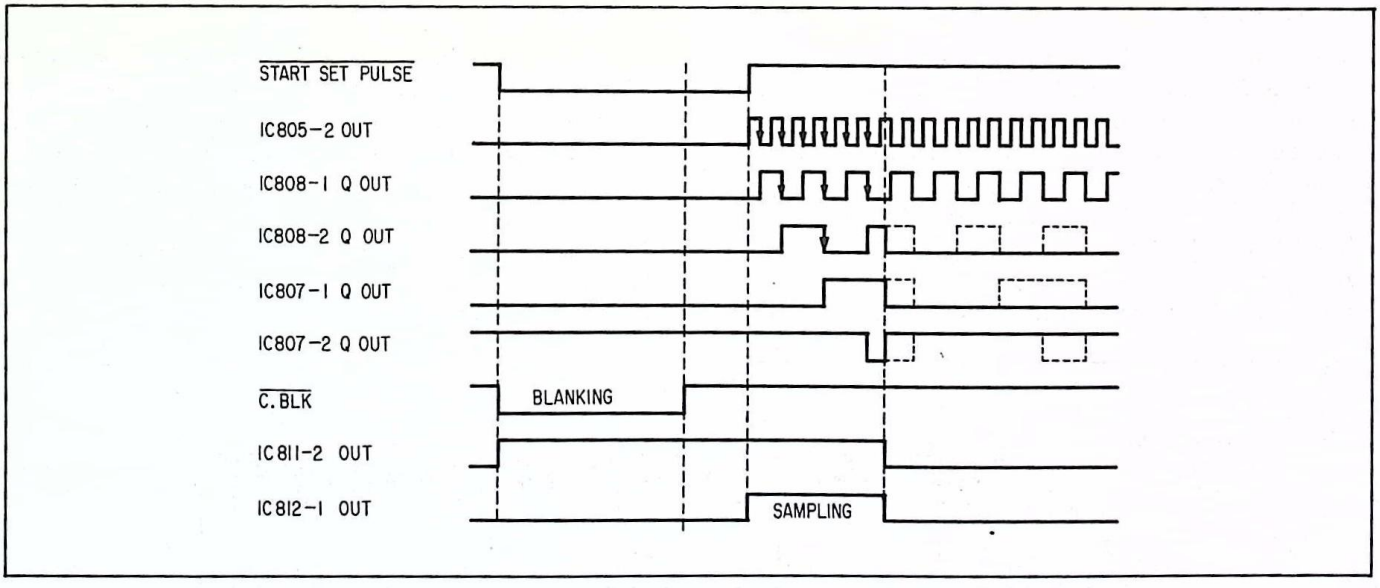

Fig. II-11.

3. Video Stop and White Stop

During the run-in period, the index signal is detected and the PLL is operated, and video signals need not be output. However, the index signal cannot be picked up without emitting a beam. Therefore, during the run-in period, all-white signals to turn the entire screen white, that is, all R, G, and B signals, are output. The all-white signals are outside the effective screens and cannot be viewed in front of the CRT.

The pulse that outputs and does not output video signals is called a video stop pulse and that which outputs and does not output an all-white signal is called a white stop pulse. These pulses are produced by the gate circuit below the J-K flip flop which produces the sampling period shown in Fig. II-1 (IC800).

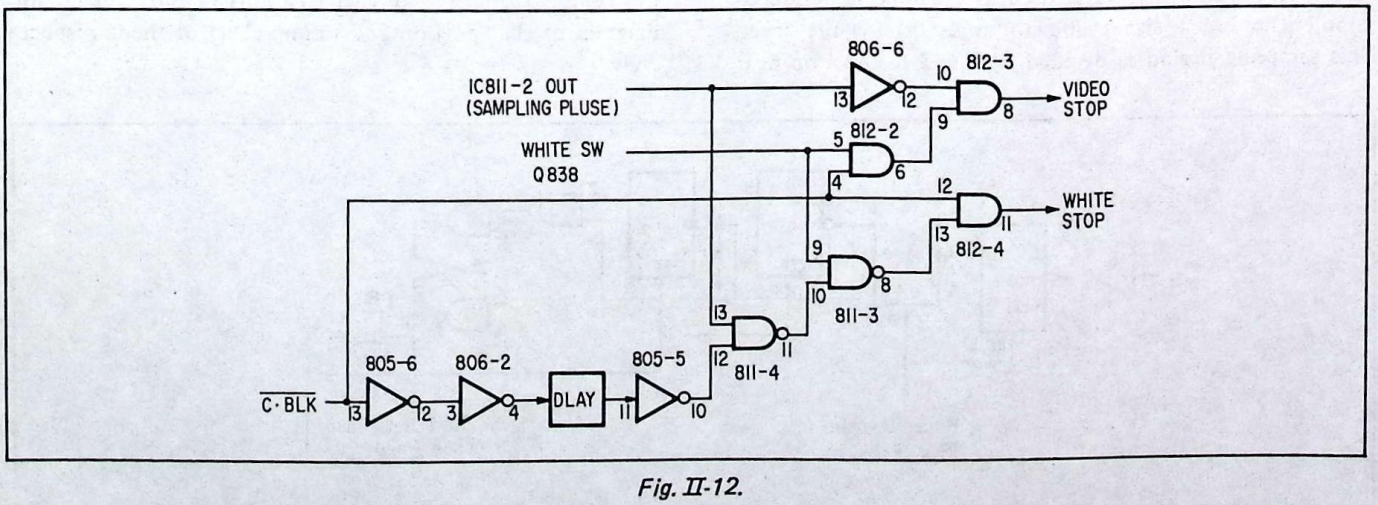

Fig. II-12.

The white SW (Q838) input to Pin ⑤ of IC812 is switched ON until the first index signal is input after power is fed to the set and the circuit and CRT rise. It outputs all-white pictures.

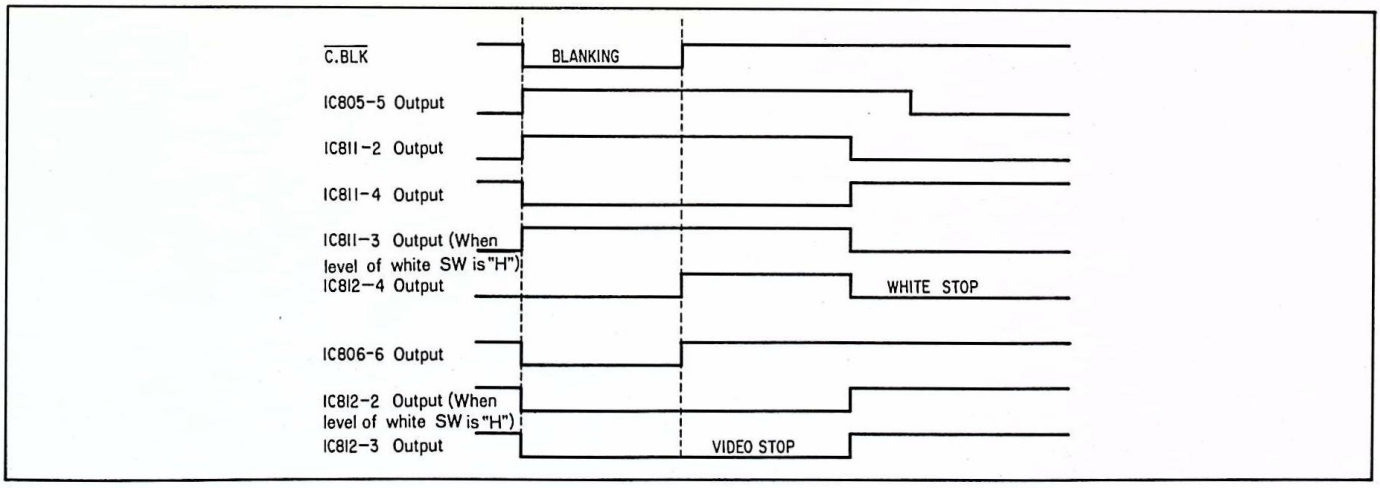

Fig. II-13.

4. Start Set Pulse

The index signal processing circuit starts operating after blanking for 1H line is finished to set a run-in period, and an index signal is input. The start set pulse notifies each circuit when the first index signal is input. During blanking, the level of the start set pulse becomes "H", and the pulse stops index signal processing. The level of the start set pulse becomes "L" to start index signal processing when blanking ends, scanning for the next 1H line starts, and the first index signal is input.

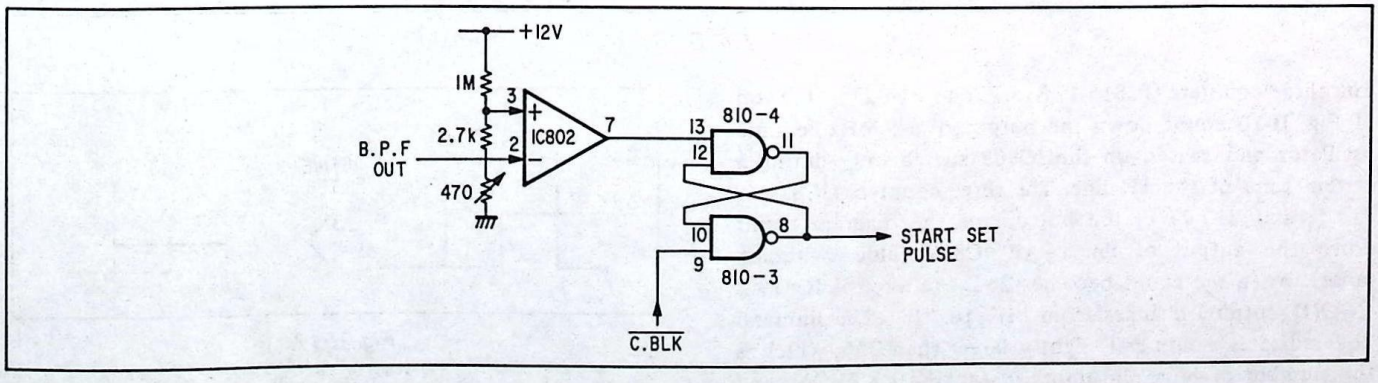

Fig. II-14.

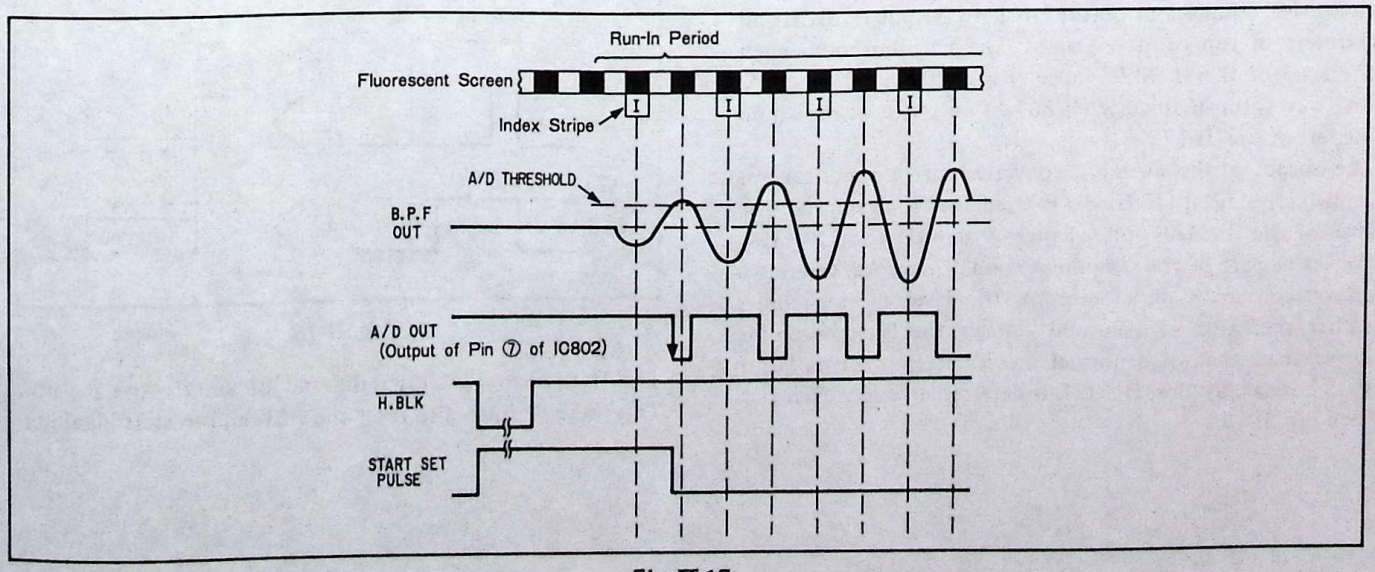

Fig. II-15.

5. H. SIZE Stabilization Circuit

The part in Fig. II-1 Block Diagram of Index Signal Processing Circuit with a group of six counters arranged in right from the center is the H. SIZE stabilization circuit.

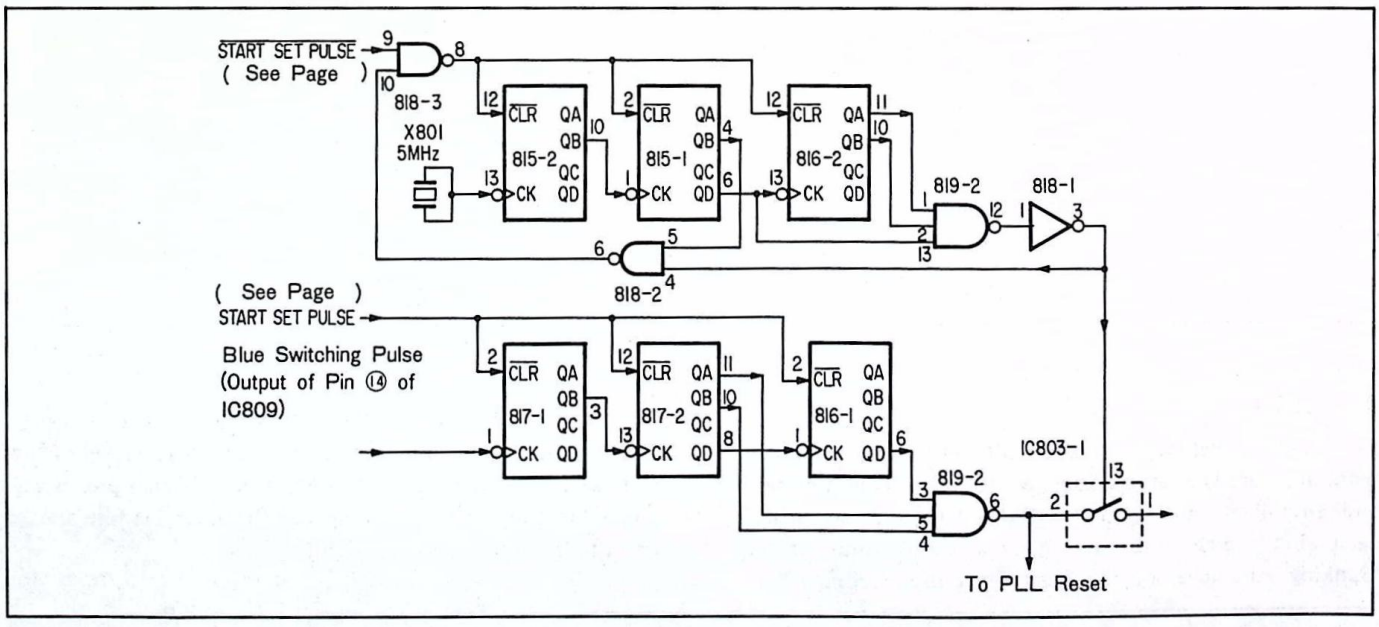

Fig. II-16.

The three counters (IC815-1, 815-2, and 816-2) in the top of Fig. II-16.count down the output of a 5-MHz ceramic oscillator and switch on the IC803 switch only during a certain time of the 1H line. The three counters (IC816-1, 817-1, and 817-2) in the bottom of the diagram count down the output of Pin ⑭ of IC809 (blue switching pulse). When the count becomes 262, the level of IC819-2 (NAND output) changes from "H" to "L". The numeral 262 indicates a numeral slightly larger than 256, which is the number of blue phosphors in the INDEXTRON, and shows the end of H. SIZE of an effective picture. The circuit has counters in bottom of it to output H. SIZE and counters in top of it to sample the neighborhood when the level of the H. SIZE pulse changes from "H" to "L". The waveform of this SW (IC803-1) output is as shown on the left of Fig. II-17.

The output of this switch is converted into a direct current in an active filter. If H. SIZE is smaller than normal, the level of the H. SIZE pulse changes from "H" to "L" during the latter part of the sampling period. Therefore, when it is converted into a direct current, the level of it becomes higher than that of a normal voltage, the level becoming lower than that of a normal voltage if H. SIZE is larger than normal. By this, H. SIZE is determined and is changed. (See Fig. II-18.)

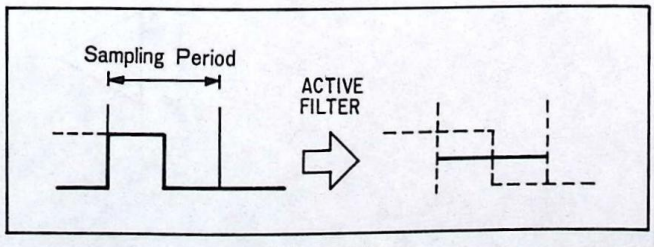

Fig. II-17.

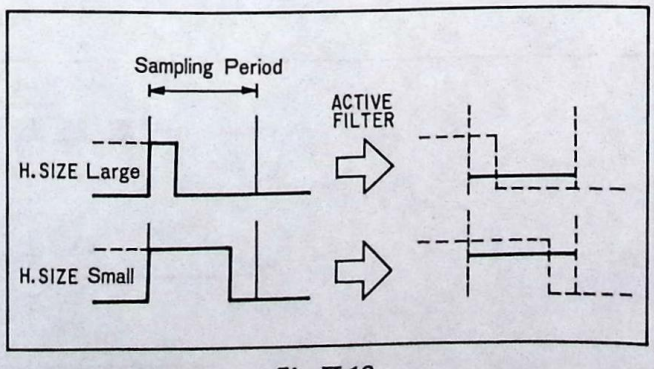

Fig. II-18.

The H. SIZE pulse shows the end of an effective picture. This pulse is utilized to reset the PLL and to start blanking.

6. Focus Marker

The projector has to be focused before viewing pictures. A reticule is shown near the center of the picture and focusing is tried by viewing it. This reticule mark is called the focus marker. The market output circuit is shown in Fig. II-21 and is described below. As the circuit, only eight retriggerable monostable circuits are used. The monostable circuits are switched ON only during the time constant time (tw) determined by C_T and R_T as shown at the left of Fig. II-19. Focusing is realized by changing the time constants and combining them. (See Fig. II-20.)

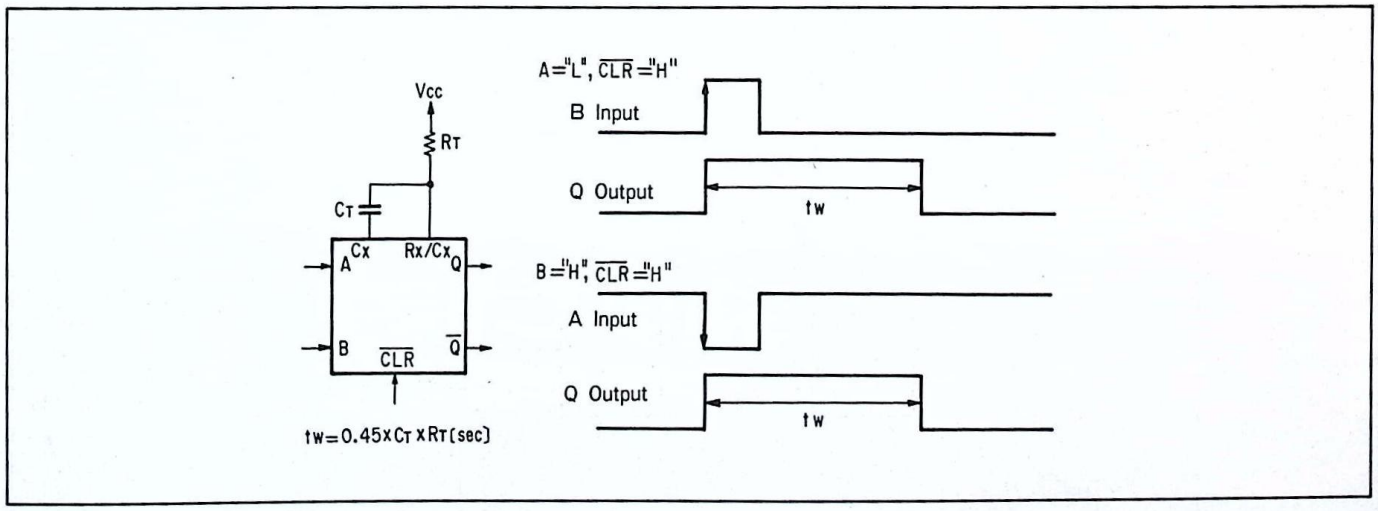

Fig. II-19.

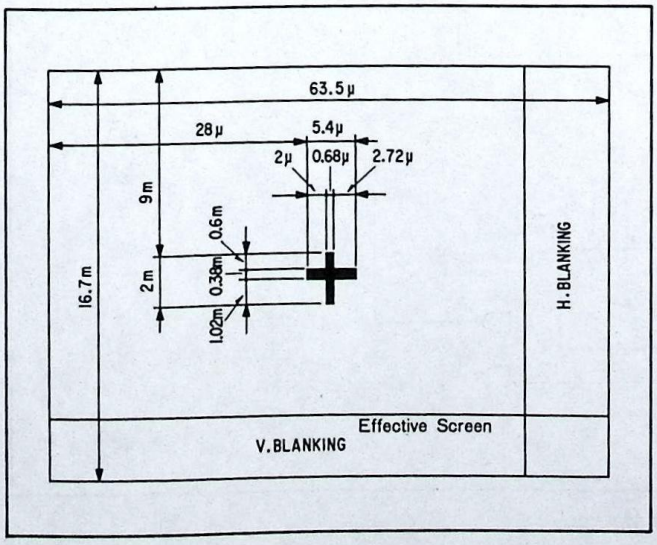

Fig. II-20.

In Fig. II-21, the four monostable circuits (IC451, 452) on top produce H timing, and the four monostable circuits (IC453, 454) on bottom produce the V timing. The V monostable circuits have an R-S flip flop to prevent displaying of pictures while the marker is shown. This marker output is connected to VIDEO OUTPUT of the BB Board. When using the marker, see the edges of the reticule. The reticule edges become blue when the focal point is in front of the screen. The reticule edges become red when the focal point is beyond the screen. Focusing is correct when the edges ared not colored.

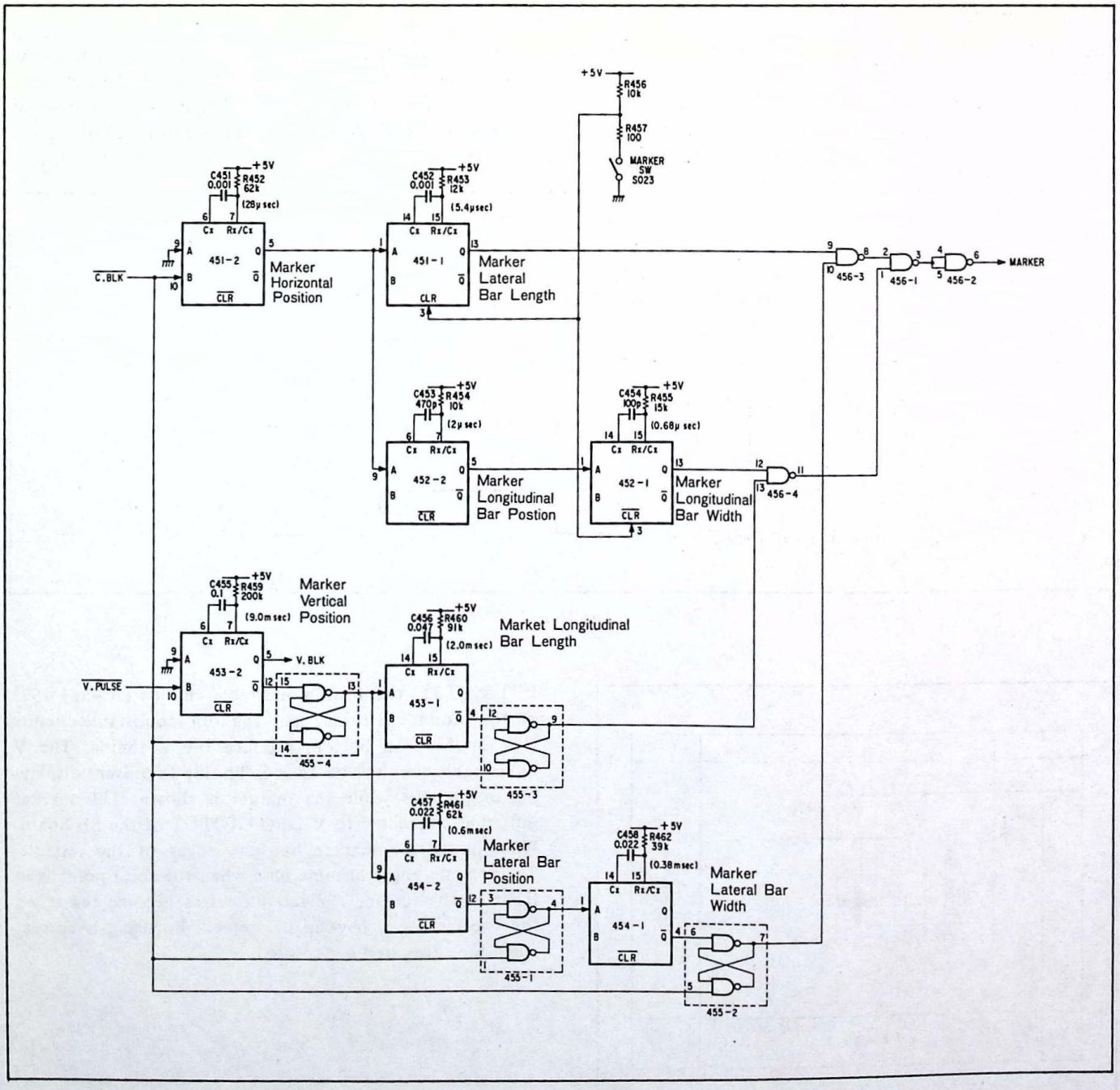

Fig. II-21. Focus Marker

III. CHANNEL SELECTOR

The block diagram of the Channel Selector is shown in Fig. III-1(a) and its circuit diagram is shown in Fig. III-1(b). The heart of the Channel Selector is IC1101 (CX520-108N) which selects the channels and controlls other elements (Remote Control, etc.). Relating to select the channels, IC202 for switching the bands, and TU202 and TU201 for corresponding with CATV and U/V Mixer are used. IC1102 for CRT Display and IC1103 for Memory are also used.

IC1101 is one chip microcomputer and performs several functions within itself. Details of each function are described in following.

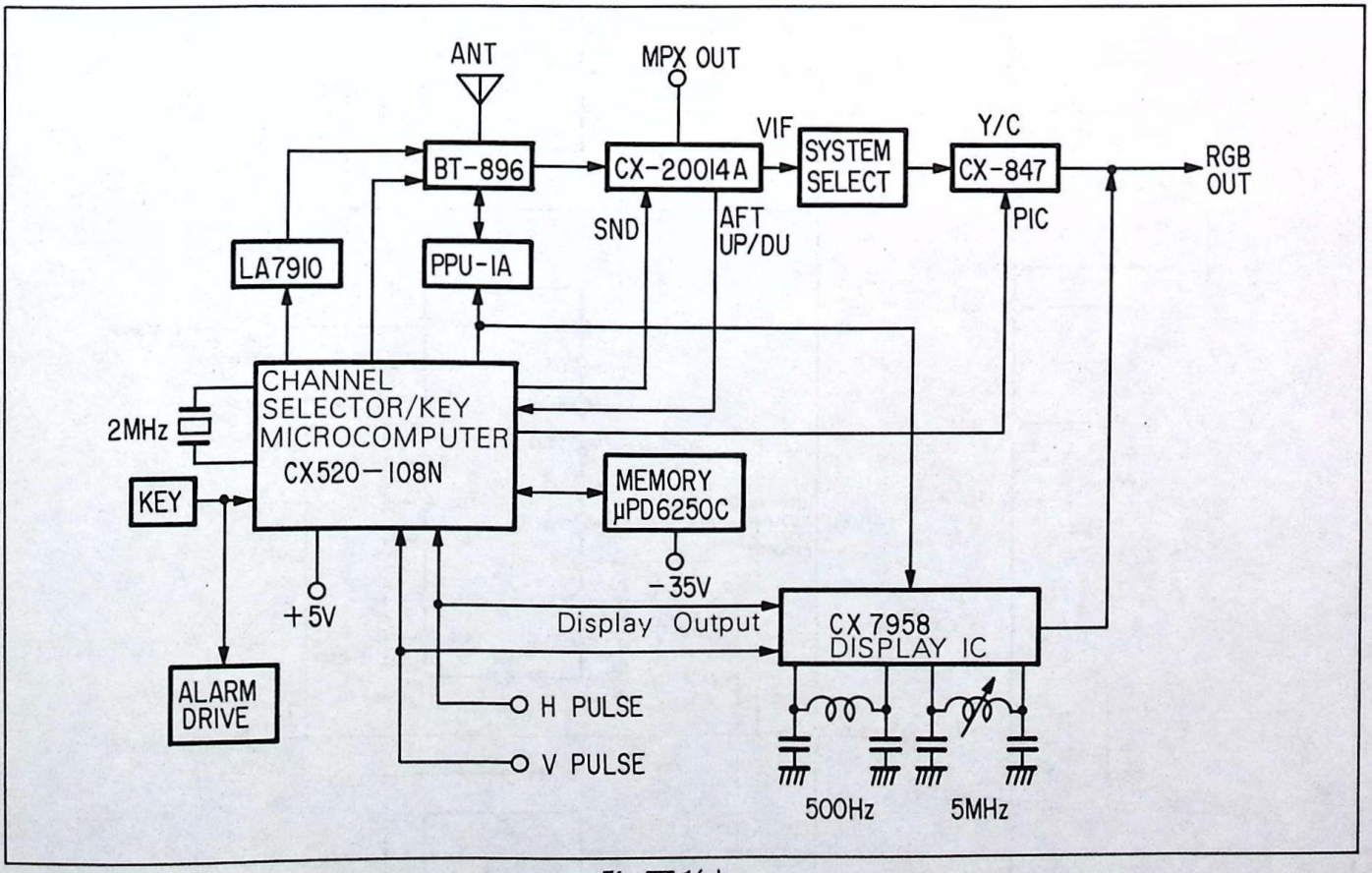

Fig. III-1(a)

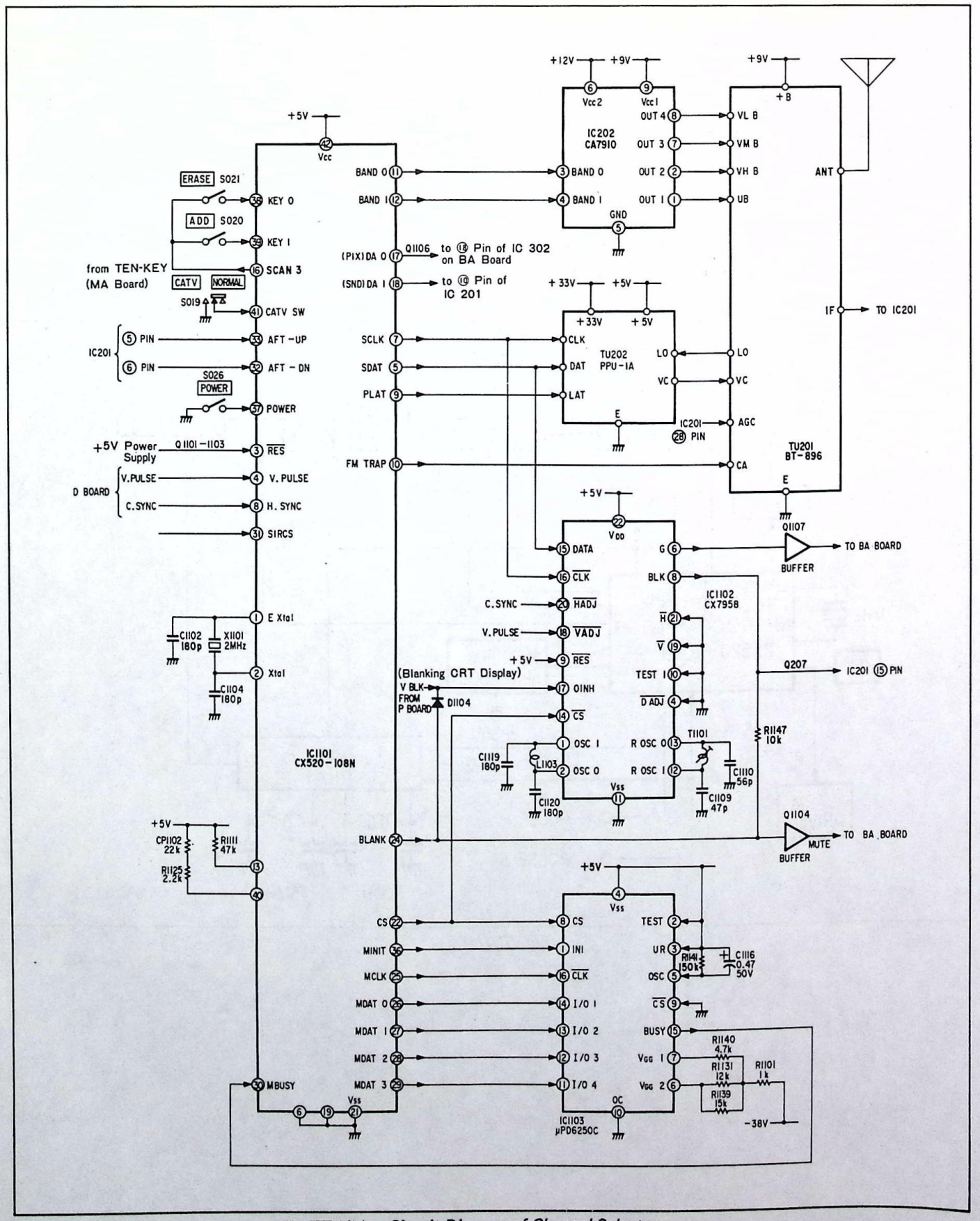

Fig. III-1(b) Circuit Diagram of Channel Selector

1. Name and Function of Each Terminal of IC1101 (CX520-108N)

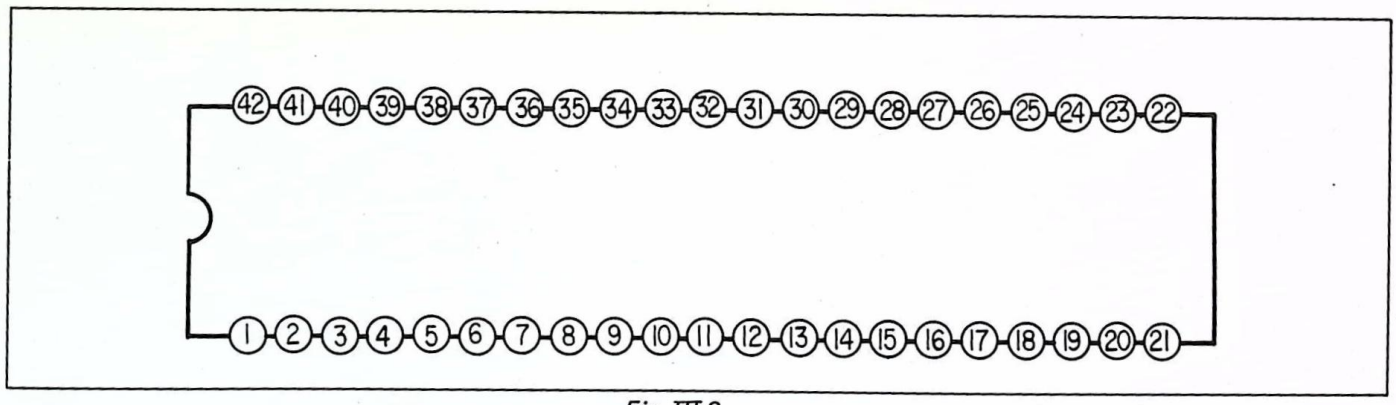

Fig. III-2

Pin No.	Name	Function
1	EXtal	Clock Input
2	Xtal	Clock Output
3	$\overline{\text{RES}}$	Reset Input
4	V-PULSE	V-PULSE Input
5	S DAT	Serial Data Output
6	————	Nonuse, Connected to GND.
7	S CLK	Serial Clock Output
8	H-SYNC	H-SYNC PULSE Input
9	PLAT	PLL Data Latch Output
10	FM TRAP	FM TRAP Switch Output
11	BAND 0	BAND Output
12	BAND 1	BAND Output 1
13	SCAN 0	Nonuse, PULL UP to 5V Power Supply
14	SCAN 1	Nonuse, Disconnected
15	SCAN 2	Nonuse, Disconnected
16	SCAN 3	KEY SCAN Output
17	PIX	PIX Data Output
18	SND	SND Data Output
19	————	Nonuse, Connected to GND
20	ANT	Nonuse, Disconnected
21	Vss	GND
22	CS	Chip Select Output
23	RELAY	Nounse, Disconnected
24	BLANK	CRT Display BLANKING Output
25	MCLK	Memory Clock Output
26	MDAT0	Memory Data I/O 0
27	MDAT1	Memory Data I/O 1
28	MDAT2	Memory Data I/O 2
29	MDAT3	Memory Data I/O 3

30	MBUSY	Memory Busy Input
31	SIRCS	SIRCS Input
32	AFT-DN	AFT-DN Signal Input
33	AFT-UP	AFT-UP Signal Input
34	SCAN 4	Nonuse, Disconnected
35	SLEEP	Nonuse, Disconnected
36	MINIT	Memory Initialize Output
37	POWER	Power Key Input
38	KEY0	Key Sense Input 0
39	KEY1	Key Sense Input 1
40	HIT SW	Nonuse, Pull up to 5V Power Supply
41	CATV SW	CATV SW Input
42	Vcc	Power Supply (+5V)

2. Remote Control Section

2-1. SIRCS INPUT ((31) Pin)

Because IC1101 has no terminal to select the channels by TEN-KEY INPUT, it accepts TEN-KEY INPUT by decoding SIRCS signals which are output from IC001 in TEN-KEY section. SIRCS signal is also used in Wireless Remote Control, and is output as serial 11 bits data.

When the same command is accepted continuously twice at SIRCS INPUT terminal, the command is acknowledged and performed.

2-2. KEY INPUT ((38) , (39) & (16) Pins)

SCAN 3 ((16) Pin) has been outputting the pulses at timing (interval of 85msec.) as shown in Fig. III-3(a).

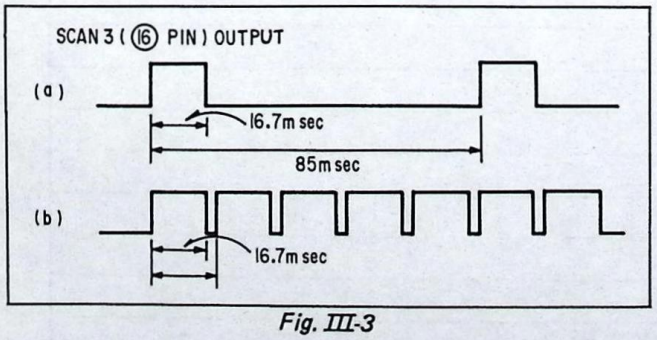

Fig. III-3

While KEY is pushed, however, the timing is changed to be with interval of 17msec. (see Fig. III-3(b)).

When the same input is accepted continuously twice, the command is acknowleged and performed.

2-3. CATV SW INPUT ((41) Pin)

The status of this terminal is checked with interval of 17msec. The status is NORMAL at "H" and CATV at "L". After the status is switched, the channels are selected in the new mode.

2-4. POWER KEY INPUT ((37) Pin)

This POWER KEY INPUT is connected to S026 on the MA Board. S026 is an internal switch independent of POWER SWITCH which is controlled by the user. This switch functions equally as POWER SWITCH (not MAIN POWER SWITCH) on previous SONY TV sets, and FP-60 has only one POWER SWITCH whitch is equal with MAIN POWER SWITCH of TV set.

Meanwhile, a system to memorize the last condition of POWER ON/OFF is used in this circuit (LAST POWER MEMORY), and the status of POWER KEY INPUT ((37) Pin) is used to determine the condition. (23) Pin also changes to "H" at LAST POWER ON, and to "L" at LAST POWER OFF. The original model which utilized this system had no trouble as S026 was controlled by user's hand and LAST POWER ON/OFF was repeated at each time.

However, because FP-60 has to be used with S026 fixed always at the status of ON, if LAST POWER MEMORY happened to be OFF ((23) Pin was "L") by any noise or discharge, CHANNEL SELECTOR MICROCOMPUTER (CX520-108N) would stop functioning and CRT Display wound be erased even with POWER SWITCH ON. ON such a case, push this S026 Switch again, and LAST POWER MEMORY is changed to be ON and the normal function is recovered.

2-5. SOUND OUTPUT and PICTURE OUTPUT (⑱ & ⑰ Pins)

SND OUTPUT (⑱ Pin) is changed when SOUND UP/DOWN Command is input through SIRCS INPUT (㉛ Pin), and PIX OUTPUT (⑰ Pin) is changed when PICTURE UP/DOWN Command is input through the same ㉛ Pin.

The output format is 6 bits PWM (64 steps) and output as shown in Fig. III-4.

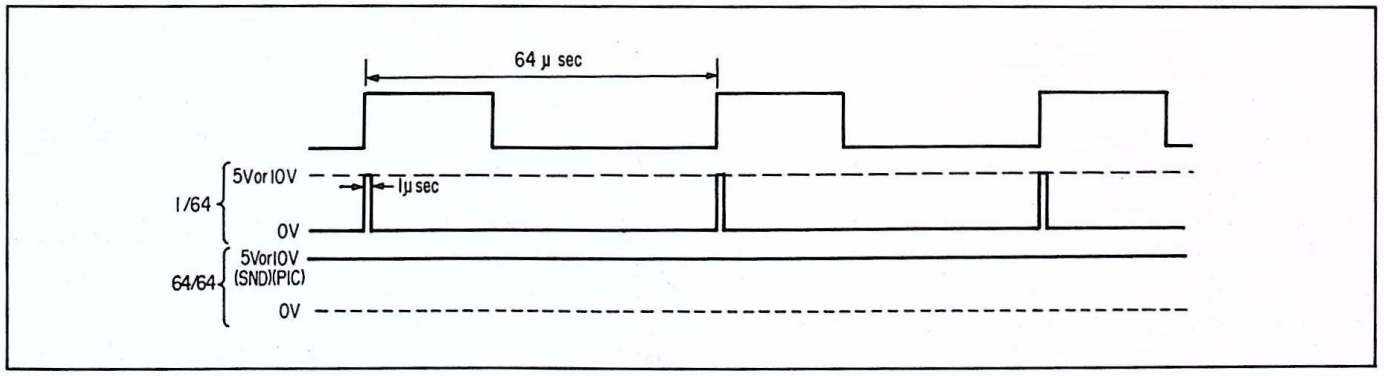

Fig. III-4

In addition, these levels of SOUND and PICTURE are memorized on Memory and maintain their condition when Power Switch is turned ON again even after it was once turned OFF. (LAST MEMORY).

Moreover, SOUND DATA is to be 0 for muting while turning POWER ON/OFF or selecting the channels.

3. Channel Selector Section

3-1. SERIAL DATA OUTPUT and SERIAL CLOCK OUTPUT (⑤ & ⑦ Pins)

SERIAL DATA OUTPUT (⑤ Pin) is the terminal to output FREQUENCY DATA to TU202 (PPU-1A) from IC1101 (CX520-108N), and SERIAL CLOCK OUTPUT (⑦ Pin) is the terminal to output CLOCK DATA for it. FREQUENCY DATA is stored in ROM of IC1101 (CX520-108N). Fig. III-5 shows the internal block diagram of TU202 (PPU-1A).

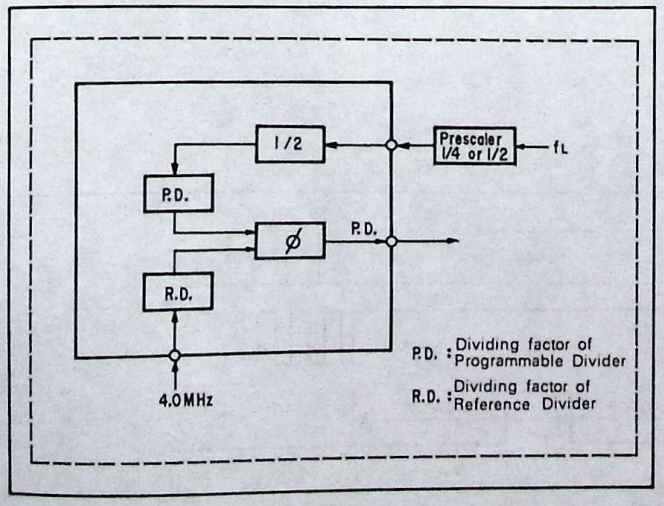

Fig. III-5

TU202 (PPU-1A) regulates VC voltage so that there is no difference between the divided frequency under tunning with TUNNER by the data of P.D. (Programmable Divider) and the divided reference frequency of 4.0MHz Oscillator by the data of R.D. (Reference Divider). PRESCALER gives the factor of 1/2 for the bands lower than 13 Ch. and 1/4 for the bands higher than J Ch. to avoide beating.

3-1-1. Data of R.D.

Data of R.D. (Reference Divider) is decided by the specification of the set, and is decided as following to set the minimum step of 25kHz in the case of FP 60.

- When the dividing ratio of PRESCALER is 1/2 (lower than 13 Ch.):

  $f_L \times 1/2 \times 1/2 \times 1/P.D. = 4.0MHz \times 1/R.D.$

  $\therefore f_L = 4.0MHz \times 1/R.D. \times 2 \times 2 \times P.D.$

  As the minimum step is 25kHz, f_L should shift 25kHz when P.D. changes as many as 1.

  $$R.D. = \frac{4.0MHz}{25kHz} \times 2 \times 2 = 640 \text{ (Reference Frequency} = 6.25kHz)$$

  The input data to TU202 (PPU-1A) is set with the value whitch subtracts 2 from the above.

  $640 - 2 = 638 = 27EH$

- When the dividing ratio of PRESCALER is 1/4 (higher than similarly J Ch.):

  R.D. = 1280 (Reference Frequency = 3.125kHz)

  The input data to TU202 (PPU-1A) is

  $1280 - 2 = 1278 = 4FEH$

  This DATA of R.D. consists of 20 bits and each bit means as following:

(LSB) (MSB)

←R0 R1 R2 R3 R4 R5 R6 R7 R8 R9 R10 R11 R12 R13, 11, AB, θθ

- Dividing factor of R.D.
- Bits to appoint Signal Input Terminal (fixed as "11")
- Bits to switch Prescaler Dividing Factor (AB = 10 — — — 2, AB = 01 — · — 4)
- Fixed as "00"

DATA of R.D. is decided by the dividing factor of PRESCALER as following:

When dividing factor of PRESCALER is 2 ... 1C27EH
When dividing factor of PRESCALER is 4 ... 2C4FEH

3-1-2. Data of P.D.

The dividing factor of DATA of P.D. (Programmable Divider) is as following:

$$P.D. = \frac{\text{Local Frequency}}{25\text{kHz}} = 40 \times f_L \text{ (MHz)}$$

The input data to TU202 (PPU-1A) is set with the value whitch subtracts 8 from the above.

$N = 40 \times f_L - 8$

For example, as f_L = 101MHz for 2 Ch.;

$N = 40 \times 101 - 8 = 4032 = FC0H$

This DATA of P.D. also consists of 20 bits, and each bit means as following:

(LSB) (MSB)

←N0 N1 N2 N3 N4 N5 N6 N7 N8 N9 N10 N11 N12 N13 N14 N15, θ1, N16 N17

Dividing factor of P.D.

Fixed as "θ1"

For example, 8θFCθH for 2Ch.

These R.D. DATA and P.D. DATA are output following SERIAL CLOCK OUTPUT (⑦ Pin) as shown in Fig. III-6. Considering instantaneous down or beating, SERIAL DATA is output repeatedly during V-BLANKING.

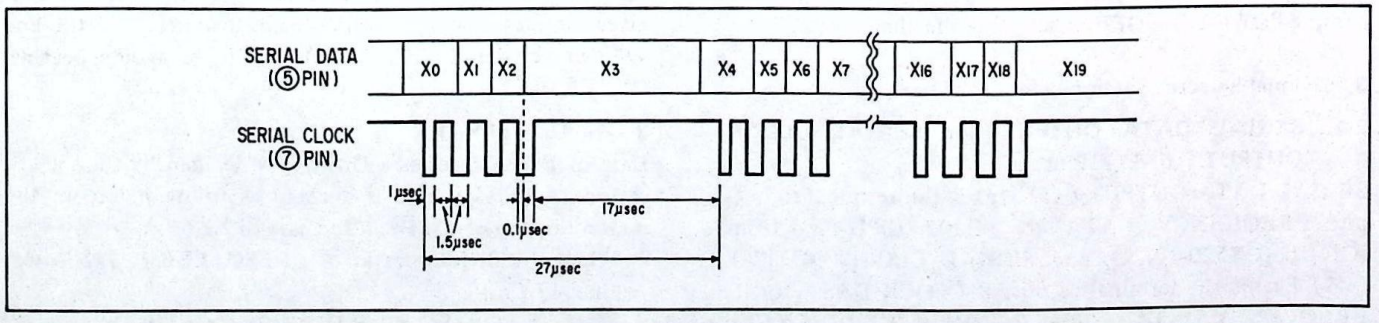

Fig. III-6

3-2. PLL LATCH OUTPUT (⑨ Pin)

This is the output to load DATA into TU202 (PPU-1A). At rising of this output, TU202 latches 40 bits data (20 bits of R.D. and 20 bits of P.D.) existing on Shift Register to Divider. Fig. III-7 shows the output timing.

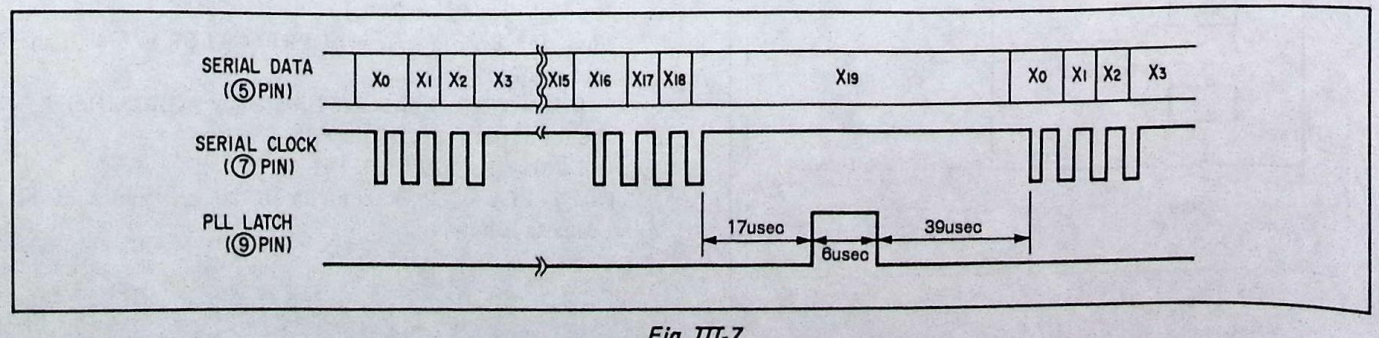

Fig. III-7

3-3. FM TRAP OUTPUT (⑩ Pin)

As FM band is overlapped in some range on the sets corresponding with CATV, FM TRAP should be stopped in CATV mode. FM TRAP OUTPUT (⑩ Pin) controls this FM TRAP; FM TRAP ON at "H" and FM TRAP OFF at "L".

3-4. BAND OUTPUT (⑪ & ⑫ Pins)

The output data with 2 bits from BAND OUTPUT (⑪ & ⑫ Pins) of IC1101 is decoded by IC202 (LA7910) and input to TUNNER.

Function of IC202 is shown in following:

Input		Output			
BAND 0 ③ Pin	BAND 1 ④ Pin	OUT 1 ① Pin	OUT 2 ② Pin	OUT 3 ⑦ Pin	OUT 4 ⑧ Pin
L	L	H	Z	Z	Z
H	L	Z	H	Z	Z
L	H	Z	Z	H	Z
H	H	Z	Z	Z	H

3-5. Table of Frequency Data for each channel

Indication Channel	AIR							CATV						
	Channel	P MHz	S MHz	BAND	FM TRAP	R. D.	P. D.	Channel	P MHz	S MHz	BAND	FM TRAP	R. D.	P. D.
1								A-8	73.25	77.75	VL	ON	1C27E	81290
2	2	55.25	59.75	VL	ON	1C27E	80FC0	2	55.25	59.75				80FC0
3	3	61.25	65.75				810B0	3	61.25	65.75				810B0
4	4	67.25	71.75				811A0	4	67.25	71.75				811A0
5	5	77.25	81.75				81330	A-7	79.25	83.75				81380
6	6	83.25	87.75				81420	A-6	85.25	89.75				81470
7	7	175.25	179.75	VM			82280	7	175.25	179.75	VM			82280
8	8	181.25	185.75				82370	8	181.25	185.75				82370
9	9	187.25	191.75				82460	9	187.25	191.75				82460
10	10	193.25	197.75				82550	10	193.25	197.75				82550
11	11	199.25	203.75				82644	11	199.25	203.75				82640
12	12	205.25	209.75				82730	12	205.25	209.75				82730
13	13	211.25	215.75				82820	13	211.25	215.75				82820
14	14	471.25	475.75	U		2C4FE	850C0	A	121.25	125.75		OFF		81A10
15	15	477.25	481.75				851B0	B	127.25	131.75				81B00
16	16	483.25	487.75				852A0	C	133.25	137.75				81BF0
17	17	489.25	493.75				85390	D	139.25	143.75		ON		81CE0
18	18	495.25	499.75				85480	E	145.25	149.75				81DD0
19	19	501.25	505.75				85570	F	151.25	155.75				81EC0
20	20	507.25	511.75				85660	G	157.25	161.75				81FB0
21	21	513.25	517.75				85750	H	163.25	167.75				820A0
22	22	519.25	523.75				85840	I	169.25	173.75				82190
23	23	525.25	529.75				85930	J	217.25	221.75	VH		2C4FE	82910
24	24	531.25	535.75				85A20	K	223.25	227.75				82A00
25	25	537.25	541.75				85B10	L	229.25	233.75				82AF0
26	26	543.25	547.75				85C00	M	235.25	239.75				82BE0
27	27	549.25	553.75				85CF0	N	241.25	245.75				82CD0
28	28	555.25	559.75				85DE0	O	247.25	251.75				82DC0
29	29	561.25	565.75				85ED0	P	253.25	257.75				82EB0
30	30	567.25	571.75				85FC0	Q	259.25	263.75				82FA0
31	31	573.25	577.75				860B0	R	265.25	269.75				83090
32	32	579.25	583.75				861A0	S	271.25	275.75				83180
33	33	585.25	589.75				86290	T	277.25	281.75				83270
34	34	591.25	595.75				86380	U	283.25	287.75				83360
35	35	597.25	601.75				86470	V	289.25	293.75				83450
36	36	603.25	607.75				86560	W	295.25	299.75				83540
37	37	609.25	613.75				86650	AA	301.25	305.75				83630
38	38	615.25	619.75				86740	BB	307.25	311.75				83720
39	39	621.25	625.75				86830	CC	313.25	317.75				83810
40	40	627.25	631.75				86920	DD	319.25	323.75				83900
41	41	633.25	637.75				86A10	EE	325.25	329.75				839F0
42	42	639.25	643.75				86B00	FF	331.25	335.75				83AE0
43	43	645.25	649.75				86BF0	GG	337.25	341.75				83BD0
44	44	651.25	655.75				86CE0	HH	343.25	347.75				83CC0
45	45	657.25	661.75				86DD0	II	349.25	353.75				83DB0
46	46	663.25	667.75				86EC0	JJ	355.25	359.75				83EA0
47	47	669.25	673.75				86FB0	KK	361.25	365.75				83F90
48	48	675.25	679.75				870A0	LL	367.25	371.75				84080
49	49	681.25	685.75				87190	MM	373.25	377.75				84170
50	50	687.25	691.75				87280	NN	379.25	383.75				84260

Indication Channel	AIR							CATV						
	Channel	P MHz	S MHz	BAND	FM TRAP	R. D.	P. D.	Channel	P MHz	S MHz	BAND	FM TRAP	R. D.	P. D.
51	51	693.25	697.75	U	ON	2C4FE	87370	OO	385.25	389.75	VH	ON	2C4FE	84350
52	52	699.25	703.75	↓	↓	↓	87460	PP	391.25	395.75	↓	↓	↓	84440
53	53	705.25	709.75	↓	↓	↓	87550	QQ	397.27	401.75	↓	↓	↓	84530
54	54	711.25	715.75	↓	↓	↓	87640	RR	403.25	407.75	↓	↓	↓	84620
55	55	715.25	721.75	↓	↓	↓	87730	SS	409.25	413.75	↓	↓	↓	84710
56	56	723.25	727.75	↓	↓	↓	87820	TT	415.25	419.75	↓	↓	↓	84800
57	57	729.25	733.75	↓	↓	↓	87910	UU	421.25	425.75	↓	↓	↓	848F0
58	58	735.25	739.75	↓	↓	↓	87A00	VV	427.25	431.75	↓	↓	↓	849E0
59	59	741.25	745.75	↓	↓	↓	87AF0	WW	433.25	437.75	↓	↓	↓	84AD0
60	60	747.25	751.75	↓	↓	↓	87BE0	XX	439.25	443.75	↓	↓	↓	84BC0
61	61	753.25	757.75	↓	↓	↓	87CD0	YY	445.25	449.75	↓	↓	↓	84CB0
62	62	759.25	763.75	↓	↓	↓	87DC0	ZZ	451.25	455.75	↓	↓	↓	84DA0
63	63	765.25	769.75	↓	↓	↓	87EB0	W + 27	457.25	461.75	↓	↓	↓	84E90
64	64	771.25	775.75	↓	↓	↓	87FA0	W + 28	463.25	467.75	↓	↓	↓	84F80
65	65	777.25	781.75	↓	↓	↓	88090	W + 29	469.25	473.75	↓	↓	↓	85070
66	66	783.25	787.75	↓	↓	↓	88180	W + 30	475.25	479.75	U	↓	↓	85160
67	67	789.25	793.75	↓	↓	↓	88270	W + 31	481.25	485.75	↓	↓	↓	85250
68	68	795.25	799.75	↓	↓	↓	88360	W + 32	487.25	491.75	↓	↓	↓	85340
69	69	801.25	805.75	↓	↓	↓	88450	W + 33	493.25	497.75	↓	↓	↓	85430
70								W + 34	499.25	503.75	↓	↓	↓	85520
71								W + 35	505.25	509.75	↓	↓	↓	85610
72								W + 36	511.25	515.75	↓	↓	↓	85700
73								W + 37	517.25	521.75	↓	↓	↓	857F0
74								W + 38	523.25	527.75	↓	↓	↓	858E0
75								W + 39	529.25	533.75	↓	↓	↓	859D0
76								W + 40	535.25	539.75	↓	↓	↓	85AC0
77								W + 41	541.25	545.75	↓	↓	↓	85BB0
78								W + 42	547.25	551.75	↓	↓	↓	85CA0
79								W + 43	553.25	557.75	↓	↓	↓	85D90
80								W + 44	559.25	563.75	↓	↓	↓	85E80
81								W + 45	565.25	569.75	↓	↓	↓	85F70
82								W + 46	571.25	575.75	↓	↓	↓	86060
83								W + 47	577.25	581.75	↓	↓	↓	86150
84								W + 48	583.25	587.75	↓	↓	↓	86240
85								W + 49	589.25	593.75	↓	↓	↓	86330
86								W + 50	595.25	599.75	↓	↓	↓	86420
87								W + 51	601.25	605.75	↓	↓	↓	86510
88								W + 52	607.25	611.75	↓	↓	↓	86600
89								W + 53	613.25	617.75	↓	↓	↓	866F0
90								W + 54	619.25	623.75	↓	↓	↓	867E0
91								W + 55	625.25	629.75	↓	↓	↓	868D0
92								W + 56	631.25	635.75	↓	↓	↓	869C0
93								W + 57	637.25	641.75	↓	↓	↓	86AB0
94								W + 58	643.25	647.75	↓	↓	↓	86BA0
95								A-5	91.25	95.75	VL	OFF	1C27E	81560
96								A-4	97.25	101.75	↓	↓	↓	81650
97								A-3	103.25	107.75	↓	↓	↓	81740
98								A-2	109.25	113.75	VM	↓	↓	81830
99								A-1	115.25	119.75	↓	↓	↓	81920
100								W + 59	649.25	653.75	U	ON	2C4FE	86C90

Indication Channel	AIR							CATV						
	Channel	P MHz	S MHz	BAND	FM TRAP	R. D.	P. D.	Channel	P MHz	S MHz	BAND	FM TRAP	R. D.	P. D.
101								W + 60	655.25	659.75	U	ON	2C4FE	86D80
102								W + 61	661.25	665.75	↓	↓	↓	86E70
103								W + 62	667.25	671.75				86F60
104								W + 63	673.25	677.75				87050
105								W + 64	679.25	683.75				87140
106								W + 65	685.25	689.75				87230
107								W + 66	691.25	695.75				87320
108								W + 67	697.25	701.75				87410
109								W + 68	703.25	707.75				87500
110								W + 69	709.25	713.75				875F0
111								W + 70	715.25	719.75				876E0
112								W + 71	721.25	725.75				877D0
113								W + 72	727.25	731.75				878C0
114								W + 73	733.25	737.75				879B0
115								W + 74	739.25	743.75				87AA0
116								W + 75	745.25	749.75				87B90
117								W + 76	751.25	755.75				87C80
118								W + 77	757.25	761.75				87D70
119								W + 78	763.25	767.75				87E60
120								W + 79	769.25	773.25				87F50
121								W + 80	775.25	779.25				88040
122								W + 81	781.25	785.25				88130
123								W + 82	787.25	791.25				88220
124								W + 83	793.25	797.25				88310
125								W + 84	799.25	803.75				88400

4. CRT Display Section

CRT DISPLAY is performed by outputing DISPLAY DATA to CRT DISPLAY IC1102 (CX7958). DISPLAY DATA is output through FREQUENCY DATA OUTPUT TERMINAL to TU202 (PPU-1A), SERIAL DATA OUTPUT and SERIAL CLOCK OUTPUT (⑤ & ⑦ Pins). The output format is also same as at FREQUENCY DATA OUTPUT and shown in Fig. III-8. This SERIAL DATA is synchronized with V SIGNAL and output repeatedly during V-BLANKING. However, the data is not sent out even during V-BLANKING while accepting SIRCS.

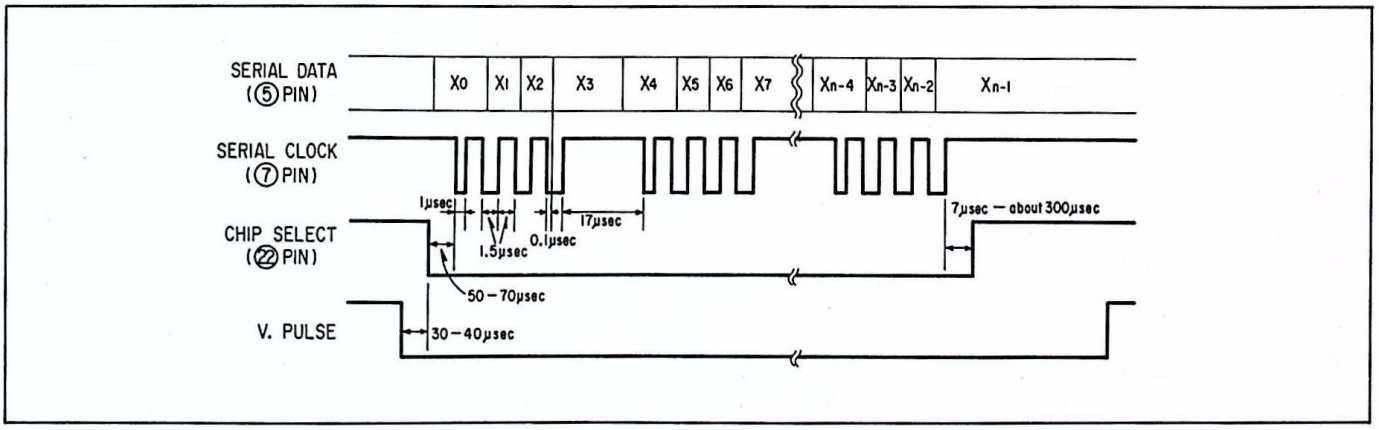

Fig. III-8

4-1. Name and function of each terminal of IC1102 (CX7958)

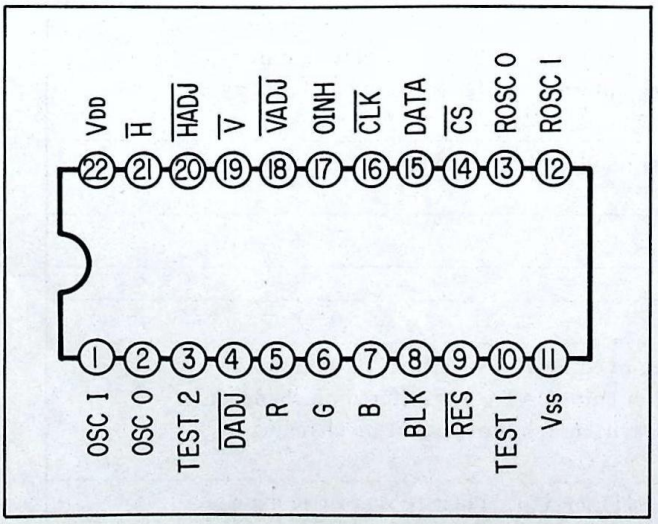

Fig. III-9

Terminal No.	Name of Terminal	I/O	Description
1	OSCI	I	Input terminal for 500kHz oscillator
2	OSCO	O	Output terminal for 500kHz oscillator
3	TEST2		Output terminal for internal monostable multivibrators whitch output EXCLUSIVE OR of HORIZONTAL DISPLAY POSITION SETTING monostable multivibrator, VERTICAL DISPLAY POSITION SETTING monostable multivibrator and DISPLAY TIMING SETTING monostable multivibrator. However, this is not used and disconnected in FP-60.
4	DADJ	I/O	Terminal to attach external C and R for DISPLAY TIMING SETTING monostable multivibrator. However this is not used and connected to GND in FP-60.
5	R	O	Output terminal for RED DISPLAY DATA. Polarity is positive logic. However, this is not used and disconnected in FP-60.
6	G	O	Output terminal for GREEN DISPLAY DATA. Polarity is positive logic.
7	B	O	Output terminal for BLUE DISPLAY DATA. Polarity is positive logic. However, this is not used and disconnected in FP-60.
8	BLK	O	Output terminal for DOT DATA to blank main signal (for example, signal transmitted at ON AIR). It shows OR of R, G and B TERMINALS and is positive logic. When BAR-GRAPHIC is displayed, BLK terminal can be "L" with selecting of transparent by setting the control flag.
9	RES	I	Input terminal for RESET PULSE. Polarity is negative logic. As it has internal Schmidt circuit, AUTOMATIC RESET is available at POWER ON with only C and R attached externally. By resetting, internal register is cleared and display is erase, but the datas on internal RAM remain.
10	TEST1	I	Input terminal to set TEXT MODE. Normally this is fixed as "L", but not used and connected to GND in FP-60.
11	VSS	Power Supply	0V
12	ROSCI	I	Input terminal for 5MHz oscillator.
13	ROSCO	O	Output terminal for 5MHz oscillator.
14	CS	I	Input terminal for CONTROL SIGNAL of SERIAL INTERFACE. Polarity is negative logic. It has internal Schmidt circuit. DATA is transfered on changing CS TERMINAL from "H" to "L" and written in internal RAM on changing to "H" again at end of its transfer.
15	DATA	I	Input terminal for DATA of SERIAL INTERFACE. Polarity is positive logic.
16	CLK	I	Input terminal for CLOCK of SERIAL INTERFACE. It has internal Schmidt circuit, and takes in DATA at rising of CLOCK whitch is negative polarity.
17	OINH	I/O	Input terminal for inhibiting output at R, G, B and BLK TERMINAL. OINH TERMINAL is "L" for normal function, and all R, G, B and BLK TERMINALs are "L" when OINH TERMINAL is "H".
18	VADJ	I/O	Terminal to attach external C and R for VERTICAL DISPLAY POSITION SETTING monostable multivibrator. The multivibrator starts to function at decaying of VERTICAL SYNCHRONIZE SIGNAL input from V TERMINAL. The negative polarity pulse can be input through VADJ TERMINAL with V TERMINAL connected with VDD or VSS. In this case, external C and R should be removed.

Terminal No.	Name of Terminal	I/O	Description
19	V	I	Input terminal for TRIGGER SIGNAL of VERTICAL DISPLAY POSITION SETTING monostable multivibrator. Polarity is negative logic. It has internal Schmidt circuit. However, this is connected to GND in FP-60. Terminal to attach external C and R for HORIZONTAL DISPLAY POSITION SETTING monostable multivibrator. The multivibrator starts to function at
20	HADJ	I/O	decaying of HORIZONTAL SYNCHRONIZE SIGNAL input from $\overline{H}$ TERMINAL. The negative pulse can be input through $\overline{HADJ}$ TERMINAL with $\overline{H}$ TERMINAL connected with VDD or VSS. In this case, external C and R should be removed.
21	H	I	Input terminal for TRIGGER SIGNAL of HORIZONTAL DISPLAY POSITION SETTING monostable multivibrator. Polarity is negative logic. It has internal Schmidt circuit. However, this is connected to GND in FP-60.
22	VDD	Power Supply	+5V

4-2. Function of IC1102 (CX7958)

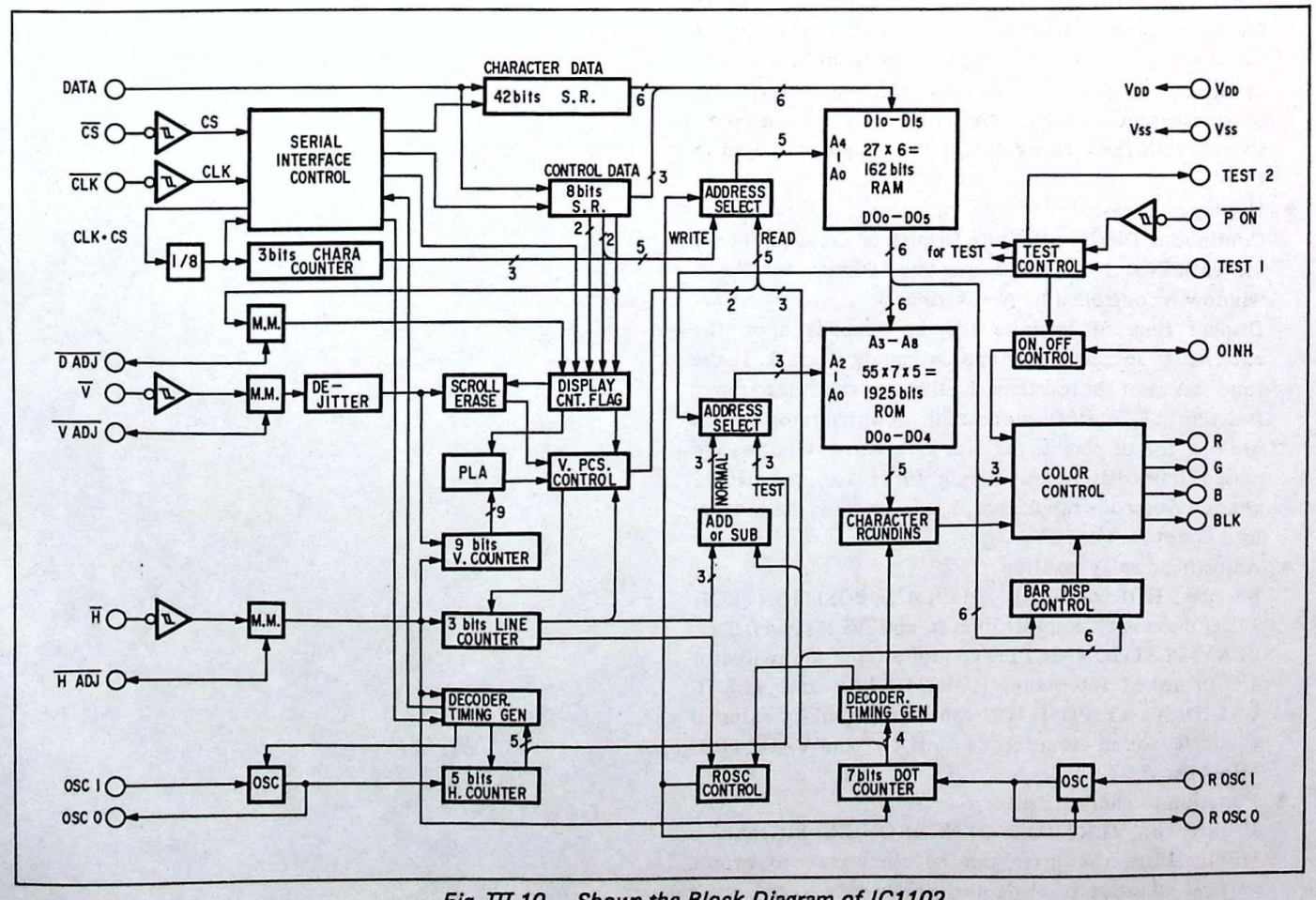

Fig. III-10 Shows the Block Diagram of IC1102

4-2-1. Function of displaying

- Composition of display window
  As shown in Fig. III-11, the screen has four windoes; No. 1 to No. 4, and maximum 7 characters can be displayed in each No. 1 to No. 3 window and 64 vertical slits in No. 4 window. Fig. III-12 shows the horizontal position of each window and III-13 shows their vertical positions.
- Composition of character
  55 characters whitch consist of 5 x 7 dots can be displayed by internal Character-Generator. Fig. III-14 shows the figure and the code of each character. Slant lines of each character are ornamented with double rounding function.
  Size of characters includes three type of small, middle and large, however, the middle and the large can be displayed in only No. 1 window. There is a space of one dot between each character. Fig. III-15 shows the size of BAR DISPLAY which consists of 64 vertical slits.
- Color display
  Only one color among 8 colors of transparent, blue, green, cyan, red, magenta, yellow and white can be set for No. 1 to No. 3 window. Two colors can be set for No. 4 window; one color among 7 colors of blue, green, cyan, red, magenta, yellow and white and either one of transparent or black. BAR DISPLAY can be color-striped with these two colors, but only green is used in FP-60.
- Display and erase
  Continuous Display, Definite Display or Erase can be set for each No. 1 to No. 3 window. Display for No. 4 window is controlled by No. 3 window.
  Display time of Definite Display depends upon the external C and R, and is approximately 0.65CR. If the time was reset for less than the time constant, the trigger function of internal monostable multivibrator would prolong the display time. No. 2 to No. 4 windows are erased immediately on setting for Erase, but No. 1 window is scroll-erased, that is, erased from the bottom by 1/2 dot for each 2V.
- Adjusting display position
  Because HORIZONTAL DISPLAY POSITION SETTING monostable multivibrator and VERTICAL DISPLAY POSITION SETTING monostable multivibrator are furnished internally, HORIZONTAL and VERTICAL DISPLAY POSITION can be adjusted by external C and R whitch are attached to $\overline{\text{HADJ}}$ and $\overline{\text{VADJ}}$ TERMINALs.
- Function to eliminate jitter
  If jitter of VERTICAL SYNCHRONIZE SIGNAL is within 12μs, the jitter can be eliminated to avoide vertical vibration of characters irrelevantly to the phase of HORIZONTAL SYNCHRONIZE SIGNAL.

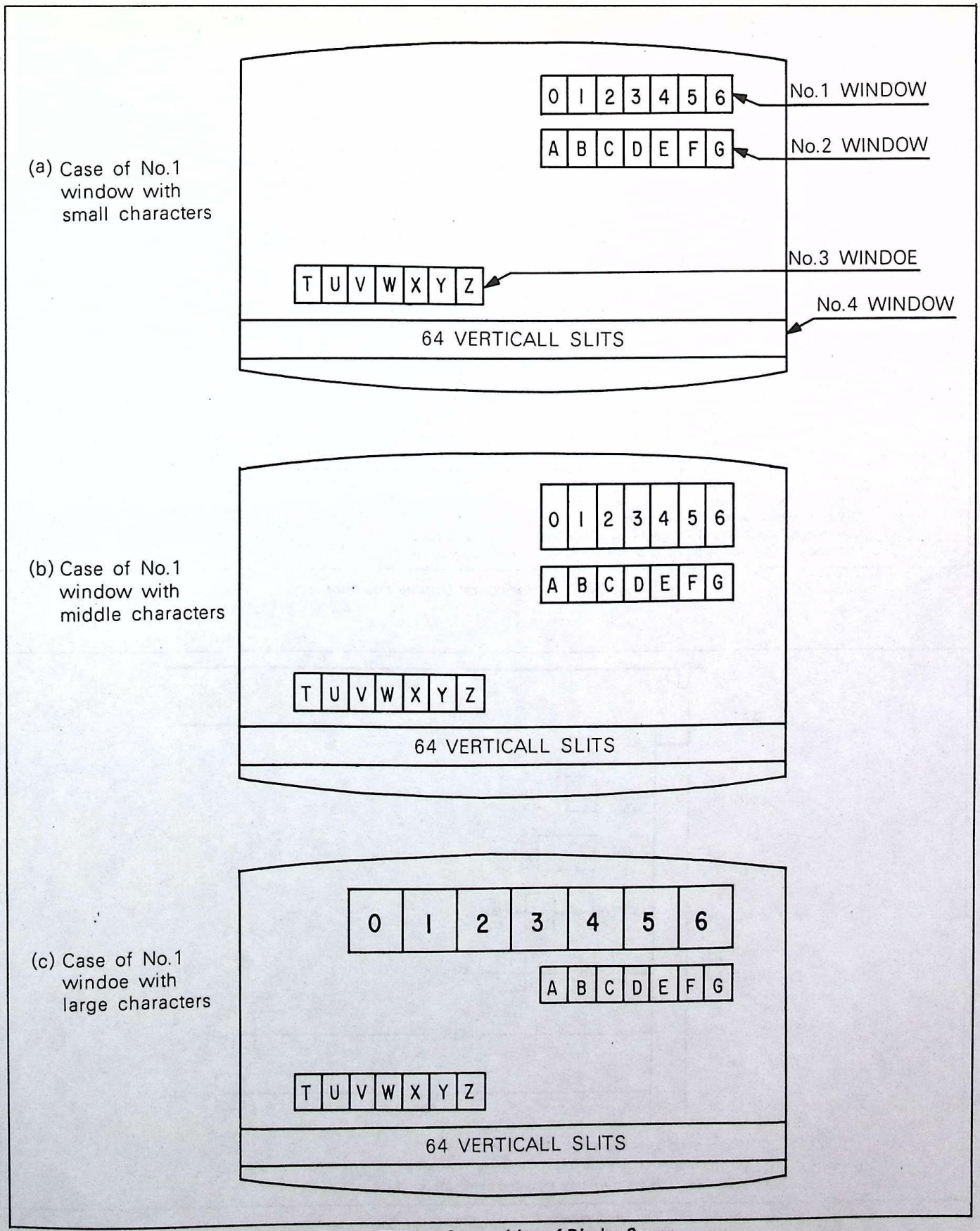

Fig. III-11 Composition of Display Screen

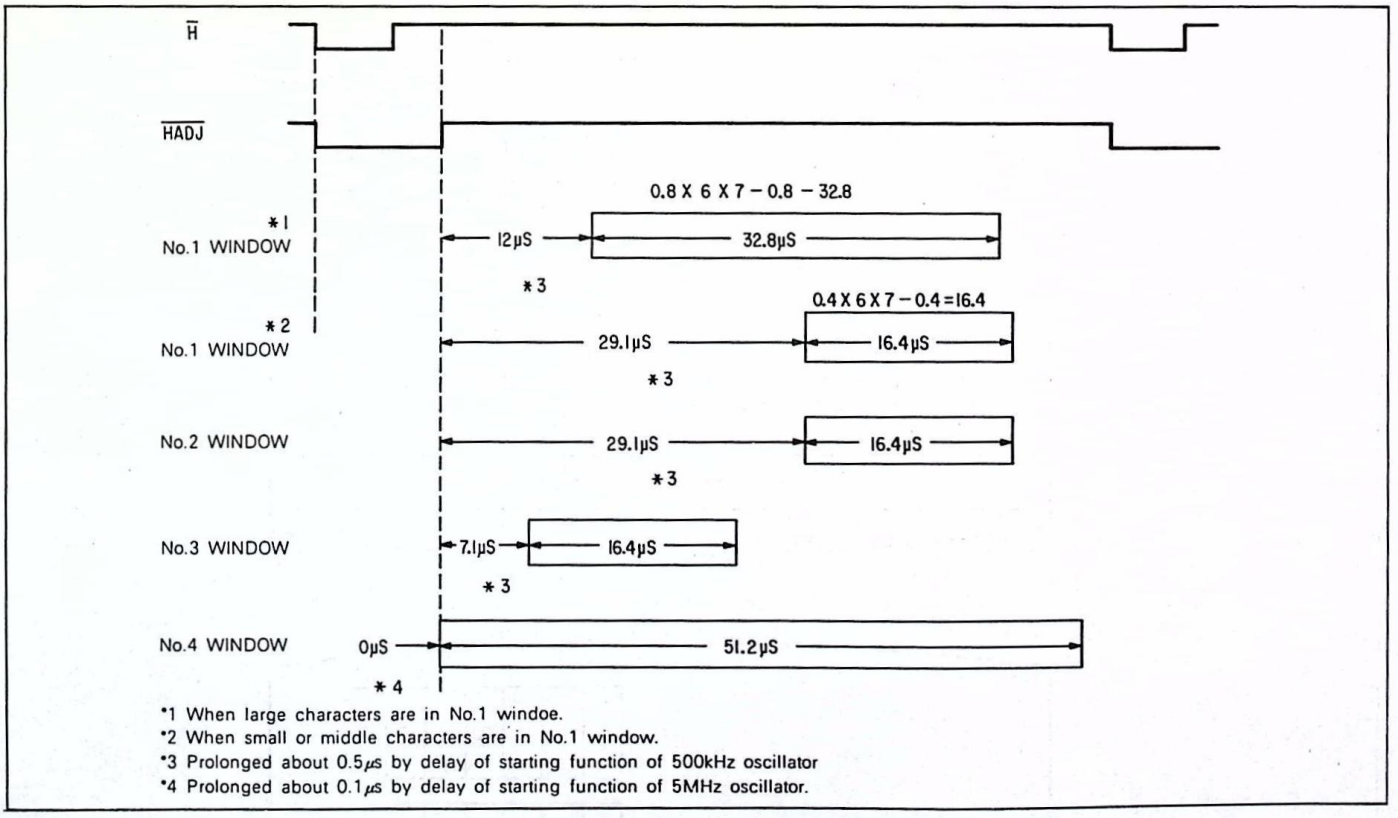

*1 When large characters are in No.1 windoe.
*2 When small or middle characters are in No.1 window.
*3 Prolonged about 0.5μs by delay of starting function of 500kHz oscillator
*4 Prolonged about 0.1μs by delay of starting function of 5MHz oscillator.

Fig. III-12 Horizontal Display Positions

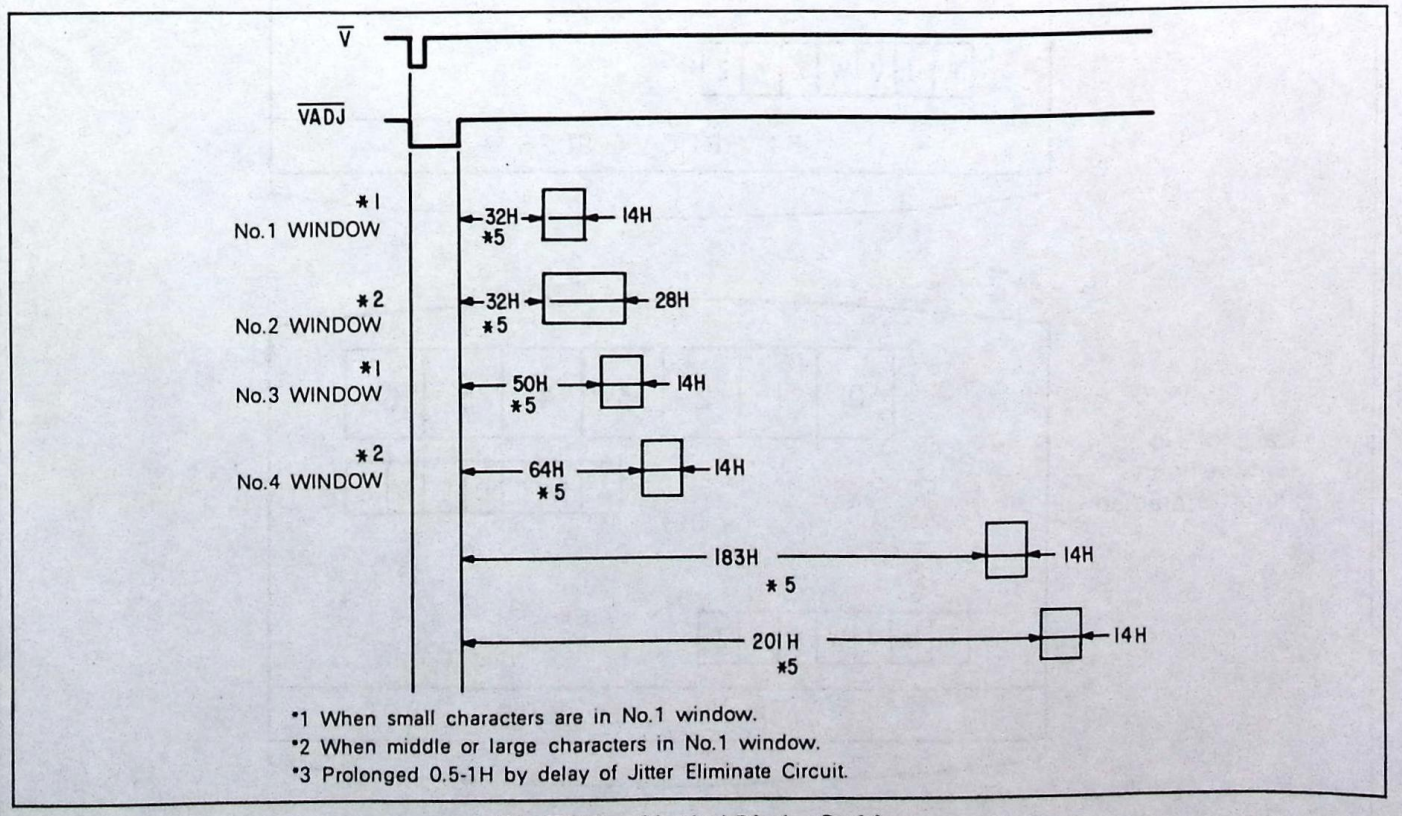

*1 When small characters are in No.1 window.
*2 When middle or large characters in No.1 window.
*3 Prolonged 0.5-1H by delay of Jitter Eliminate Circuit.

Fig. III-13 Vertical Display Positions

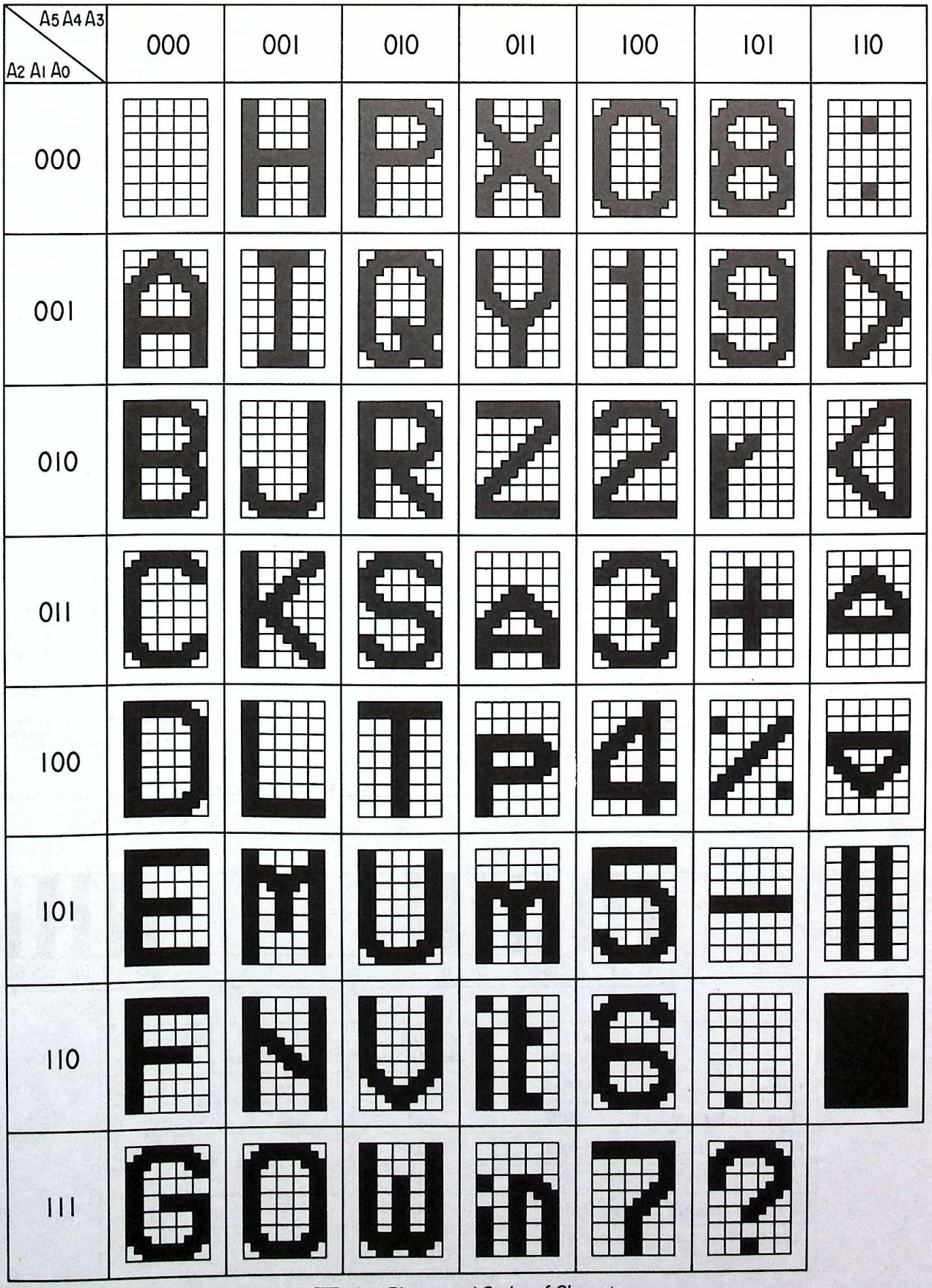

Fig. III-14. Figures and Codes of Characters

(a) Small Character

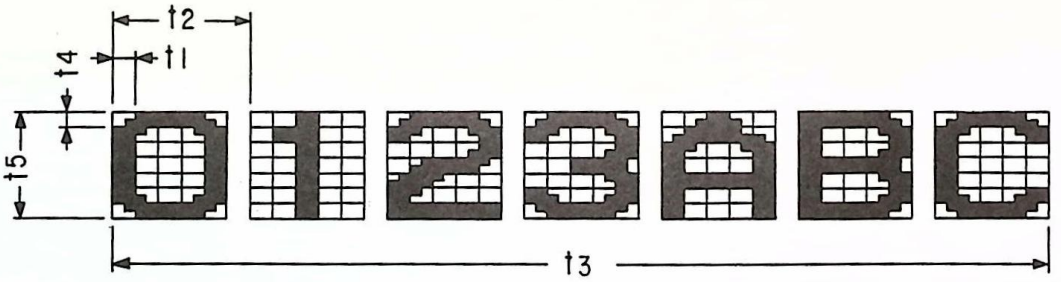

(b) Middle Character

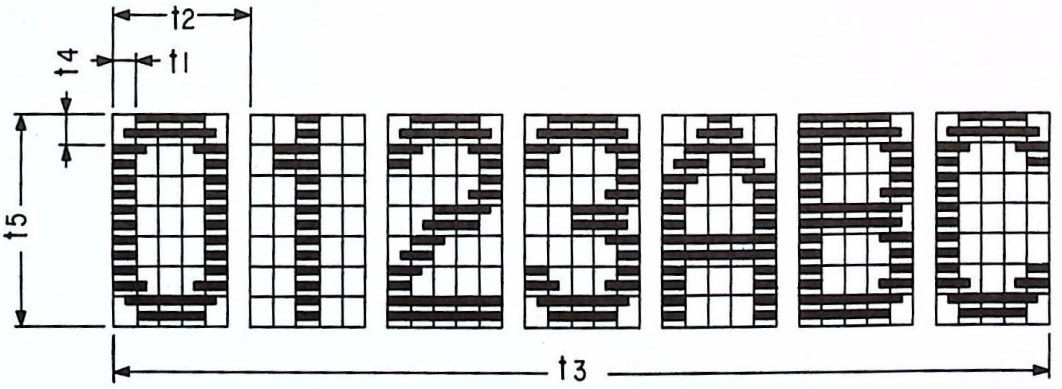

(c) Large Character

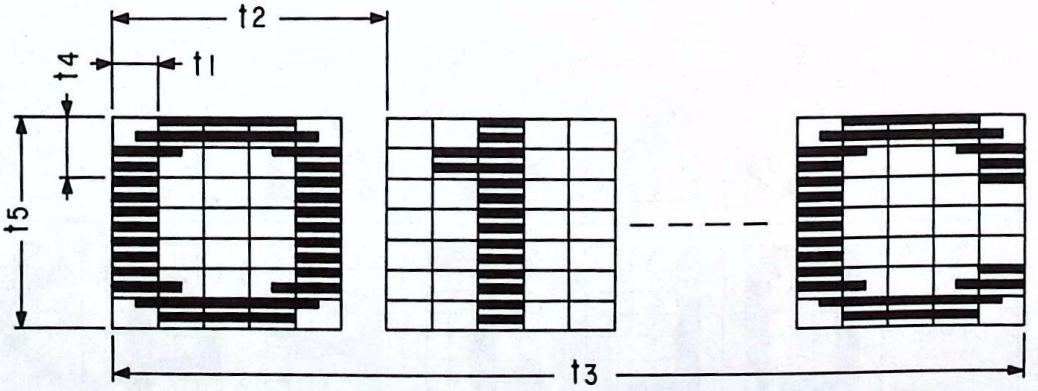

(d) Bar Display

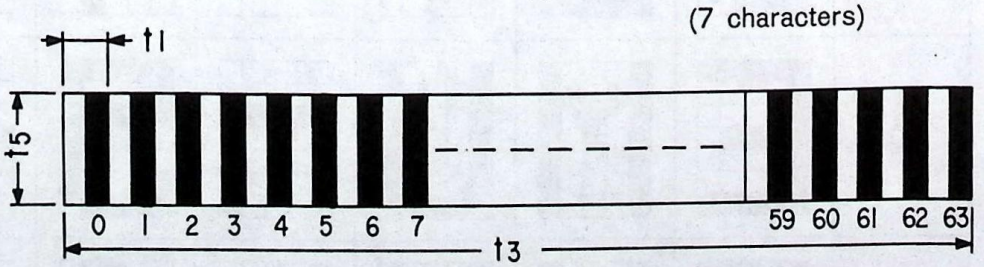

	(a) SMALL CHARACTER	(b) MIDDLE CHARACTER	(c) LARGE CHARACTER	(d) BAR DISPLAY
t_1 (dot width)	400nS	400nS	800nS	800nS
t_2 (character width)	2.4μS	2.4μS	4.8μS	–
t_3 (block width)	16.9μS	6.4μS	2.8μS	51.2μS
t_4 (dot height)	2H	4H	4H	–
t_5 (block height)	14H	28H	28H	14H
WINDOW	No. 1, No. 2 No. 3	No. 1	No. 1	No. 4

Fig. III-15 Size of Character and Bar

4-2-2. Interface function

The data to CX7958 from MICROCOMPUTER, etc. is transfered serially through terminals of DATA, $\overline{CLK}$ and $\overline{CS}$. Fig. III-16 shows the format of DATA TRANSFER and Fig. III-17 shows samples of DATA TRANSFER to each WINDOW.

- DATA TRANSFER to No. 1 – No. 3 WINDOW

  (1) Standard type

  After changing $\overline{CS}$ TERMINAL to be "L", input Control Code of 8 bits and Character Code of 7 characters x 8 bits through DATA TERMINAL, and at the same time, input 64 CLOCK SIGNALS whitch are synchronized with DATA through $\overline{CLK}$ TERMINAL. At the end of input, change $\overline{CS}$ TERMINAL to be "H".

  (2) Simple type ––– to display n ($1 \leq n \leq 6$) characters

  After changing CS TERMINAL to be "L", input Control Code of 8 bits and Character Code of n characters x 8 bits through DATA TERMINAL, and at the same time, input n x 8 CLOCK SIGNALS whitch are synchronized with DATA through $\overline{CLK}$ TERMINAL. After the end of input, change $\overline{CS}$ TERMINAL to be "H '. Input charact ers (including the blank) are displayed from the right end in No. 1 or No. 2 WINDOW, and from the left top in No. 3 WINDOW.

- DATA TRANSFER to No. 4 WINDOW

  (1) Standard type

  After changing $\overline{CS}$ TERMINAL to be "L", input Control Code of 8 bits, Color 2 Data of 8 bits, Step Number of 8 bits and Data of 5 x 8 bits (Don't Care) through DATA TERMINAL, and at the same time, input 64 CLOCK SIGNALS whitch are synchronized with DATA through $\overline{CLK}$ TERMINAL. After the end of input, change $\overline{CS}$ TERMINAL to be "H".

  (2) Simple type

  After changing $\overline{CS}$ TERMINAL to be "L", input Control Code of 8 bits, Color 2 Data of 8 bits and Step Number of 8 bits through DATA TERMINAL, and at the same time, input 24 CLOCK SIGNALS whitch are synchronized with DATA through $\overline{CLK}$ TERMINAL. After the end of input, change $\overline{CS}$ to be "H".

- Transfer of only Control Code

  After changing $\overline{CS}$ TERMINAL to be ""L"", input Control Code of 8 bits through DATA TERMINAL and at the same time, input 8 CLOCK SIGNALS whitch are synchronized with DATA through $\overline{CLK}$ TERMINAL. After the end of input, change $\overline{CS}$ TERMINAL to be "H". In this case, only the part whitch is set by Control Code is changed and displayed. Character Code, and Color 2 Code and Step Code of BAR DISPLAY are not changed.

- Control Code

  Control Code consists of following four blocks:

  (a) ID: to set the address to be transfered (either of No. 1 – NO. 4 WINDOW),

  (b) Display 1: to set CONTINUOUS/DEFINITE DISPLAY.

  (c) Display 2: to set DISPLAY/ERASE, SMALL/MIDDLE/LARGE CHARACTER, NTSC/PAL and BLACK/TRANSPARENT.

  (d) Color 1: to set COLOR of the character or the left side of BAR DISPLAY.

  In BAR DISPLAY with n steps, n + 1 vertical slits of the left side are set with COLOR 1 and remains are set with COLOR 2.

  Fig. III-16 shows the detail of Control Code.

- Transfer Inhibit Time

  WRITE is preceded on CX7958, and no DATA is newly accepted until the end of WRITE.

  It takes 10H (H: horizontal scanning time) to write DATA into internal RAM after the end of DATA TRANSFER, and WRITE remains during 14H for BAR DISPLAY.

  Therefor new DATA TRANSFER is inhibited for 25H after the end of last DATA TRANSFER. Rising of $\overline{CS}$ is also inhibited from 25H before No. 3 WINDOW till the top of NO. 4 WINDOW.

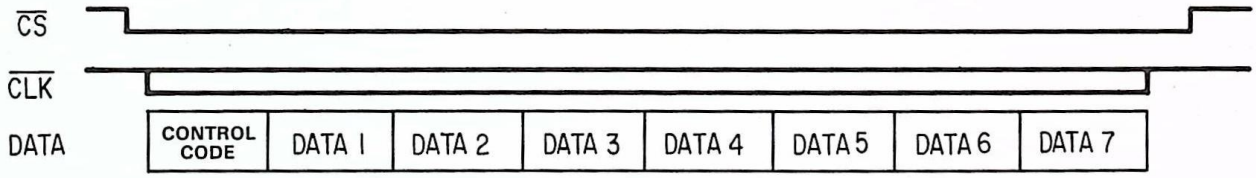

(Each block consists of 8 bits and is transfered from the side of Control Code.)

Control Code

Color 1			Display 1	Display 2		ID	
B	G	R	CR	DP_0	DP_1	ID_0	ID_1

LSB 1 2 3 4 5 6 MSB (Transfered from LSB side.)

ID_1		0	0	1	1
ID_0		0	1	0	1
DP_0	DP_1	No. 1 Window	No. 2 Window	No. 3 Window	No. 4 Window
0	0	Erase	Erase	Erase	Transparent
1	0	Small Character	Small Character	NTSC Small Character	Transparent
0	1	Middle Character	Small Character	PAL Small Character	Black
1	1	Large Character	Small Character	PAL Small Character	Black

Color 1, Color 2			
Color	B	G	R
Black/ Transparent	0	0	0
Blue	1	0	0
Green	0	1	0
Cyan	1	1	0
Red	0	0	1
Magenta	1	0	1
Yellow	0	1	1
White	1	1	1

CR	Display Time
0	Continuous
1	Definite

In No. 4 Window, color of RGB = 000 is selective for black or transparent.

Data 1 – 7 (X means "Don't Care", transfered from LSB side)
- In the case of No. 1 – No. 3 Window
  - Data 1 – 7 : Character Code
- In the case of No. 4 Window
  - Data 1 : Color 2
  - Data 2 : Step Number
  - Data 3 – 7 : Don't Care

A_0	A_1	A_2	A_3	A_4	A_5	X	X
LSB	1	2	3	4	5	6	7
B	G	R	X	X	X	X	X
2^0	2^1	2^2	2^3	2^4	2^5	X	X
X	X	X	X	X	X	X	X

Fig. III-16 Format of Data Transfer

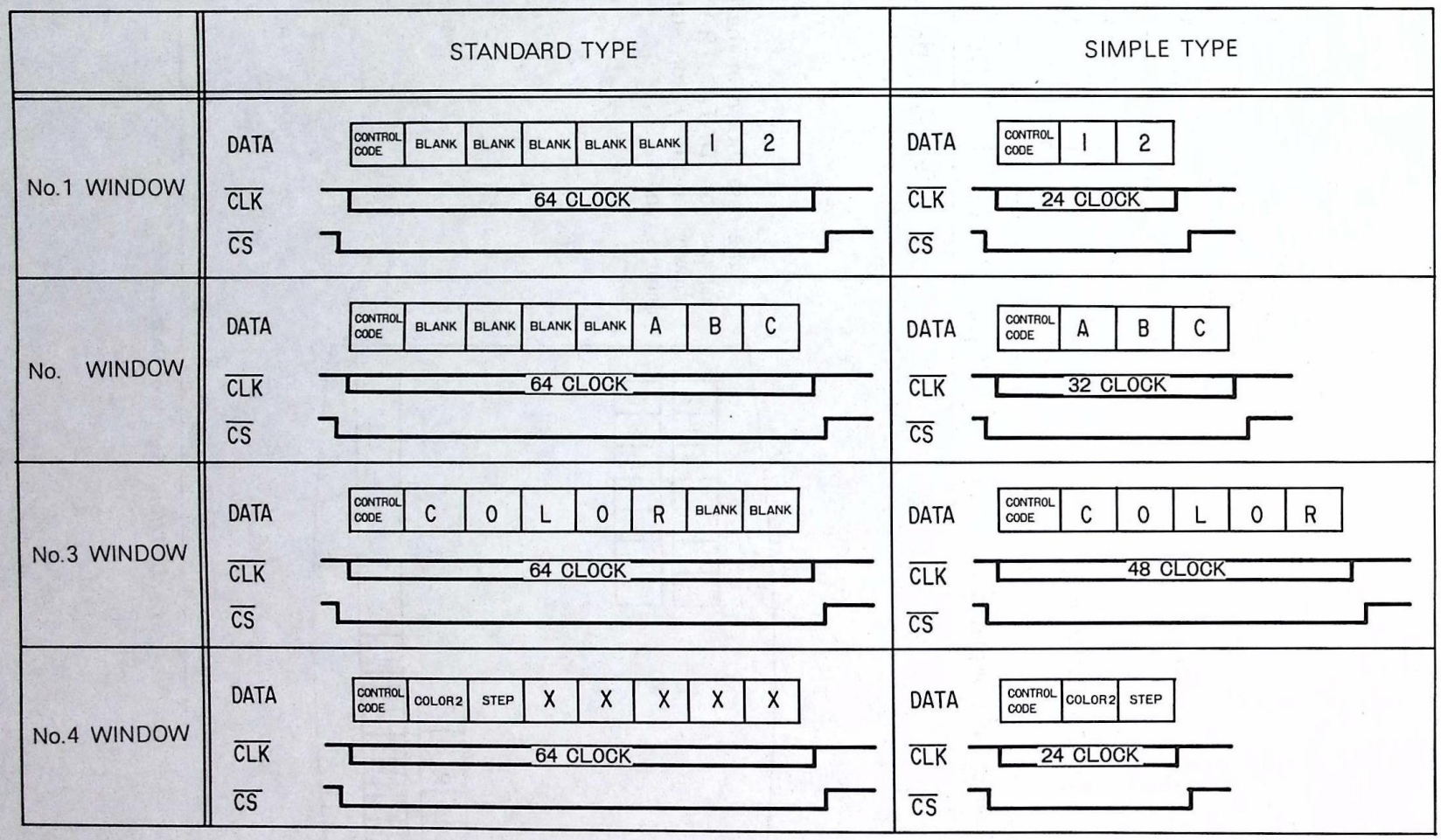

Fig. III-17 (a) Sample of Data Transfer

*2

	LSB 1	2	3	4	5	6	MSB	
Control Code (See 4-2-2 item of control code.)	COLOR 1		DISPLAY 1	DISPLAY 2		I	D	
Character Code (Blank 1, 2, A, B, C, L, O, R etc.)	A_0	A_1	A_2	A_3	A_4	A_5	X	X *1
Color 2 (Right side color of BAR DISPLAY)	B	G	R	X	X	X	X	X *1
Step Number (Number of vertical slits displayed with Color 1-1)	2^0	2^1	2^2	2^3	2^4	2^5	X	X *1

*1: X means "Don't Care"
*2: Transfered from LSB side

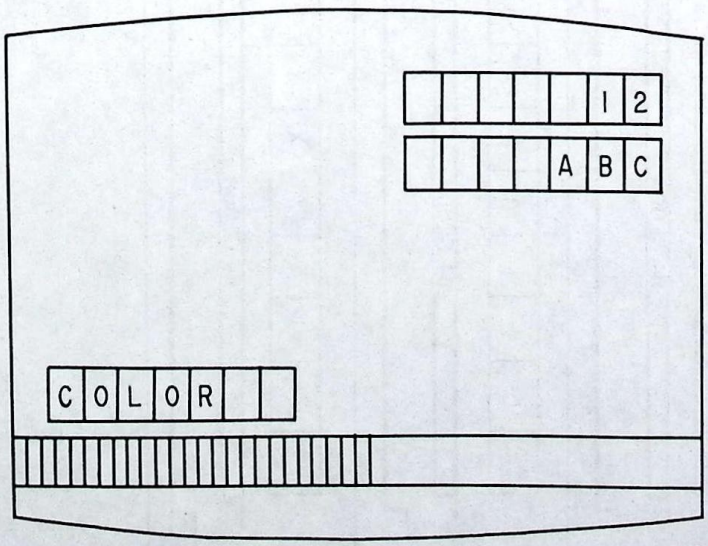

In the case shown in the left figure, sample of DATA TRANSFER is shown separately for standard and simple types.

Fig. III-17(b) Sample of Data Transfer

4-3. Actual CRT display

The following informations are displayed on CRT:

(1) CH number

(2) Levels of VOLUME and PICTURE

(3) ADD/ERASE information

When any above-mentioned information is changed, new information is displayed on CRT for 2 – 3 seconds.

Details are as followings:

(1) CH display

When a channel is selected by 10KEY/ENTER INPUT, CH-UP/DN INPUT or CATV/AIR SWITCH INPUT, the CH number is displayed with middle characters on CRT (for 2 – 3 seconds from the point of function).

For instance; CH23 ⟶ "23"

While waiting for ENTER KEY after input of numerical, however, CH number is displayed, and it is erased on clearing of numerical input. On POWER ON, CH number is also displayed (with middle characters) for about 10 seconds.

CH number may be displayed always on CRT by RECALL. In RECALL condition, CH number is always displayed irrelevantly to the previous conditions. (After RECALL ON, CH number is displayed with middle characters for 2 – 3 seconds and then with small characters.)

(2) Display of VOLUME and PICTURE

When VOL-UP/DN or PIC-UP/DN is input, BAR DISPLAY is performed and kept for 2 – 3 seconds after the end of input.

The window shows only bars and not either of VOLUME or PICTURE.

(3) For input of ADD or ERASE, small characters are displayed on CRT as following for 2 – 3 seconds:
for CH 106 "+ 106" (ADD)
"– 106" (ERASE)

The format of DISPLAY DATA output from IC1101 is shown in following:

(1) DATA for No. 1 WINDOW (56 bits)

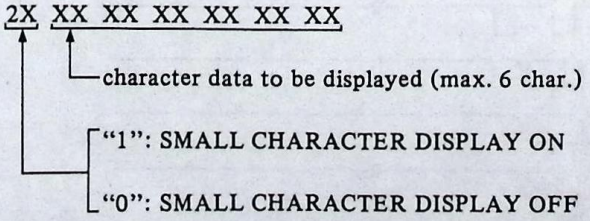

(2) DATA for No. 2 WINDOW (8 bits)

04 ––– fixed data

(3) DATA for No. 3 WINDOW (16 bits)

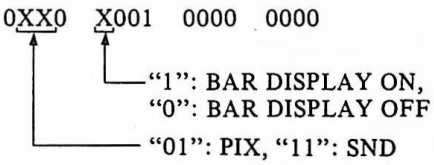

(4) DATA for No. 4 WINDOW (24 bits)

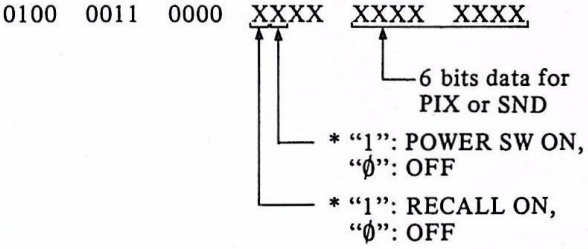

* These informations are not used in FP-60.

To output these datas, one data is output once during V-retrance, so one pair of datas are output during 4V.

5. Memory Section

IC103 (μPD6250C) is used as MEMORY IC and controlled by IC1101 (CX520-108N) through MEMORY CLOCK OUTPUT (㉕ Pin), MEMORY DATA I/O (㉖ , ㉗ , ㉘ & ㉙ Pins), MEMORY INITIALIZE OUTPUT (㉚ Pin) and MEMORY BUSY INPUT (㉚ Pin).

MEMORY CLOCK OUTPUT: to output CLOCK SIGNAL for MEMORY DATA I/O.

MEMORY DATA I/O: to output I/O COMMAND for MEMORY and MEMORY DATA I/O.

MEMORY INITIALIZE OUTPUT: output to initialize MEMORY.

A serial function is interrupted if POWER OFF during MEMORY READ/WRITE, but MEMORY is still waiting for next CLOCK forever and can not be accessed correctly in next time.

So, on POWER ON, a positive pulse is input into INITIALIZE INPUT (① Pin) of MEMORY to initialize it.

MEMORY BUSY INPUT: input to check if MEMORY is accessible.

"L": inaccessible

"H": accessible

5-1. DATA TRANSFER

Table of commands is shown in Fig. III-18(a).

MINIT	CS	MDAT3	MDAT2	MDAT1	MDAT0	Operation
L	L	X	X	X	X	No Select
L	H	L	L	X	X	No Select
L	H	L	H	L	L	DR (Data Read)
L	H	L	H	L	H	DW (Data Write)
L	H	L	H	H	L	*AR (Address Read)
L	H	L	H	H	H	*AW (Address Write)
L	H	H	L	X	X	No Select
L	H	H	H	X	X	No Select
H	X	X	X	X	X	Internal Reset

* Not used in FP-60.

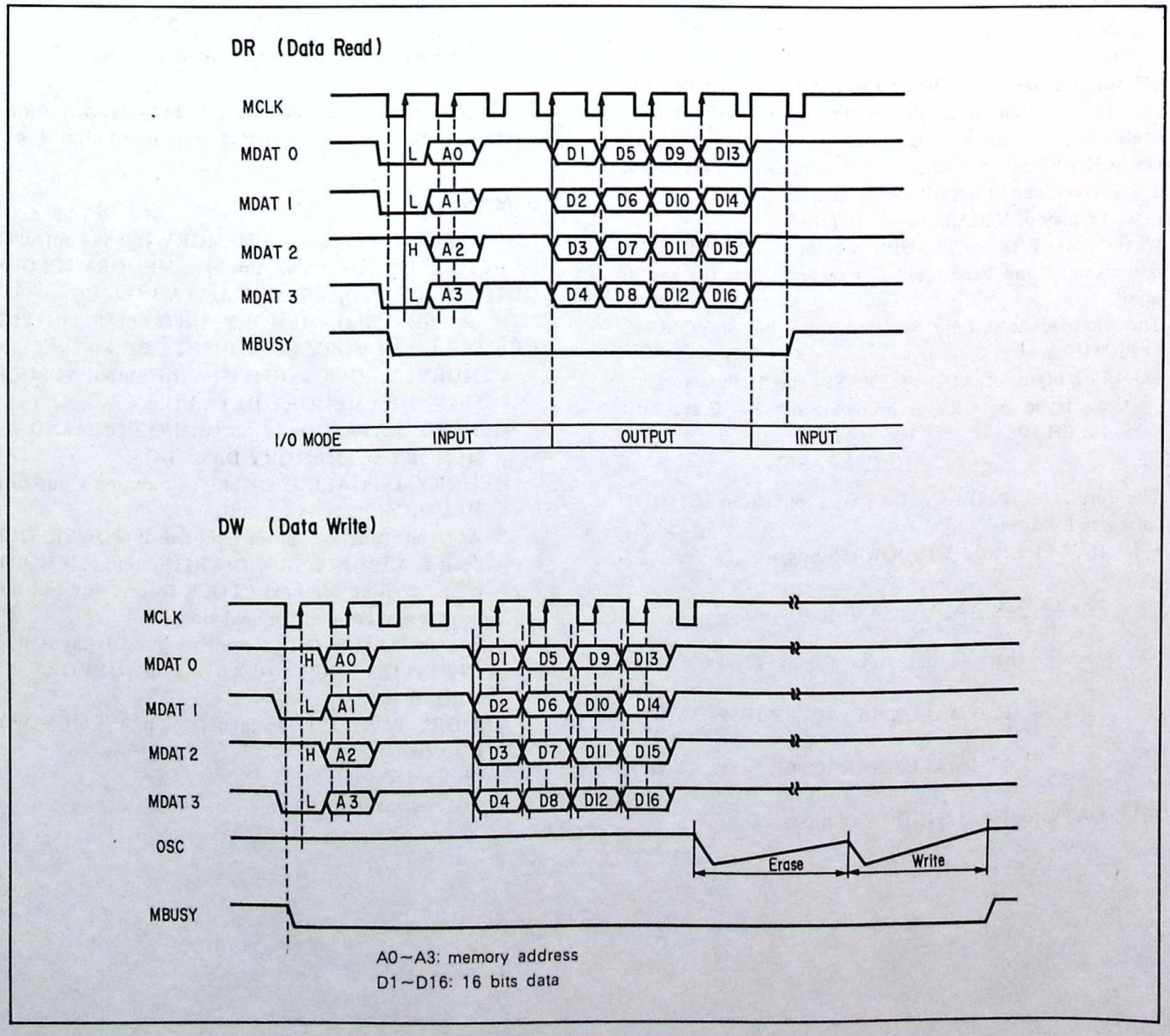

Fig. III-18 Shows the Timing Charts

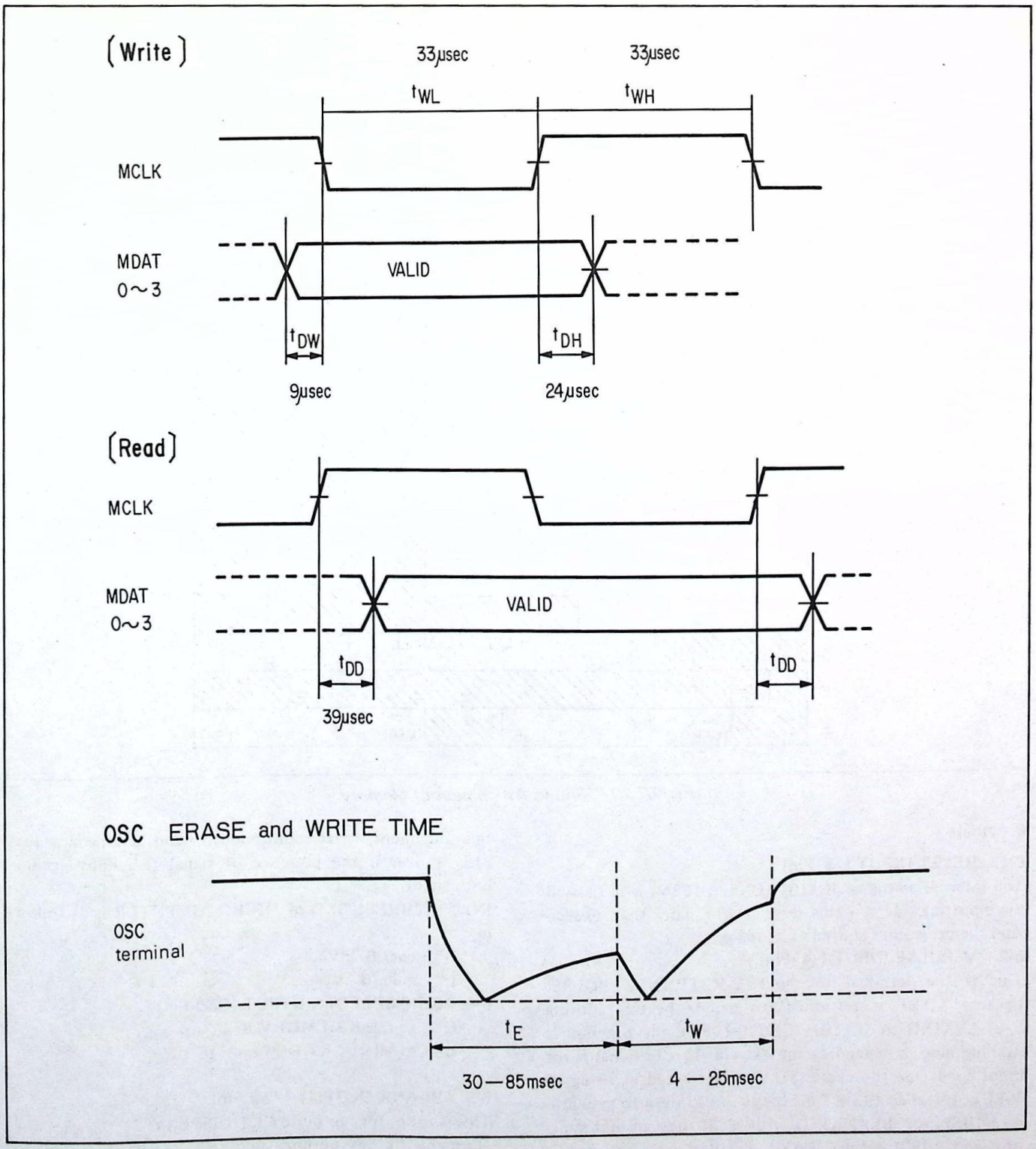

Fig. III-19

Fig. III-19 shows the relation between CLOCK and DATA.

5-2. Contents of MEMORY

Fig. III-20 shows assignment of MEMORY.

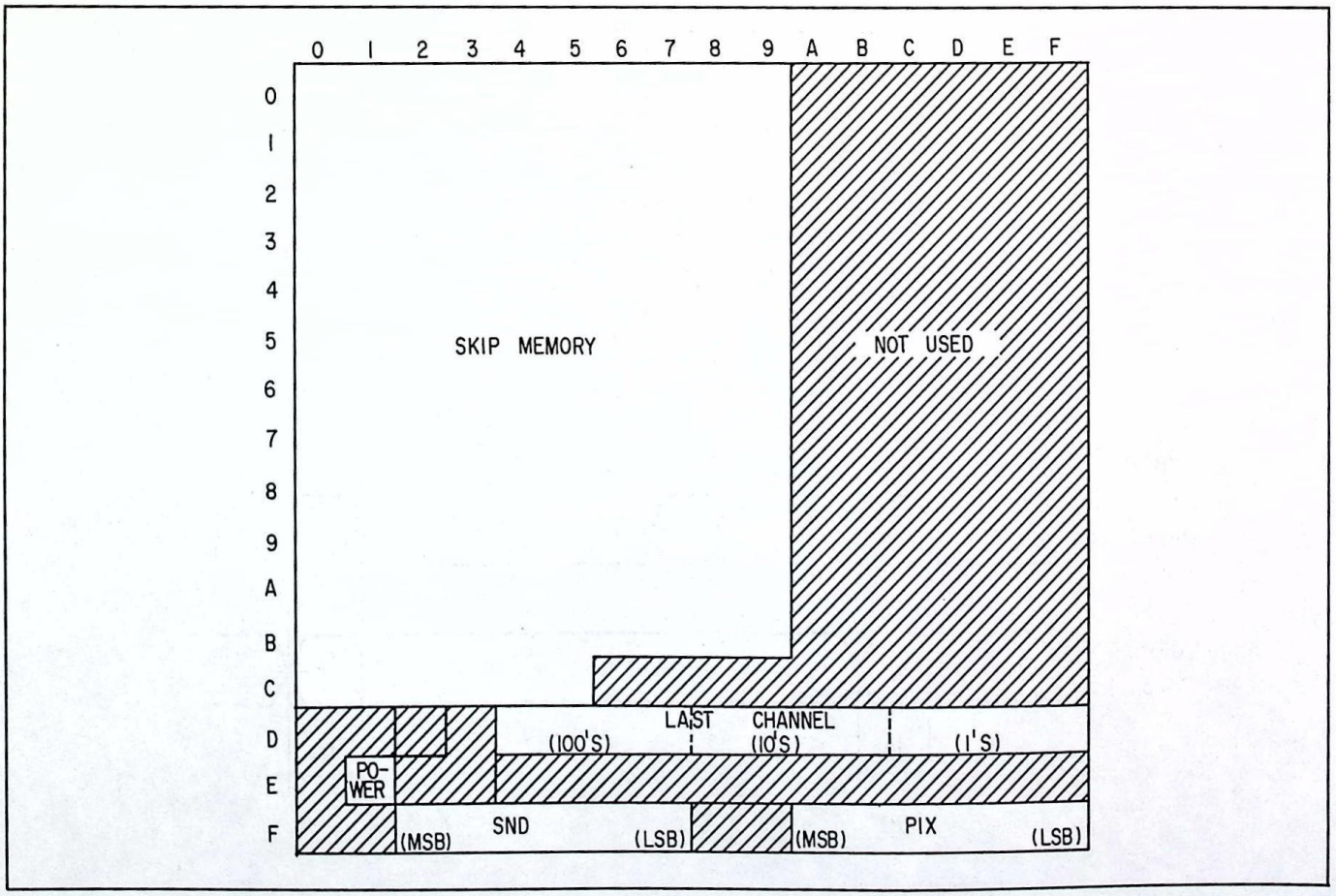

Fig. III-20 Shows Assignment of Memory

6. Others

6-1. RESET INPUT (③ Pin)

The internal status of IC1101 (CX520-108N) is initialized by inputting "L" on this terminal for more than 6μsec.. And the program is started at its rising.

6-2. V. PULSE INPUT (④ Pin)

This is the terminal to input V-RETRANCE PULSE. Because SDAT is refreshed (to avoide beating) during V-BLANKING in IC1101 (CX520-108N), the program is running always depending on V-cycle. This terminal is for input to decide the cycle. SDAT is refreshed at rising of V-PULSE (called PLL). This input is also used to synchronize DISPLAY BLANKING with V. If they are not synchronized, DISPLAY or ERASE may start from the middle of CRT screen.

6-3. H. SYNC INPUT (⑧ Pin)

H. SYNC SEP. PULSE is input into this H. SYNC INPUT terminal. MICROCOMPUTER counts these pulses at decaying of each pulse, and judges the presence of signal if 144 – 191 pulses are counted for 10msec.. If pulse counting is out of this range, it judges as no signal. It performs this judgment twice continuously and determines that PLL is over if the presence of signal is acknowleged in both times.

INPUT THRESHOLD of MICROCOMPUTER is as following:

"H" : over 0.75Vcc
"L": under 0.2Vcc

6-4. CHIP SELECT OUTPUT (㉒ Pin)

"H" : to select MEMORY IC
"L" : to select CRT DISPLAY IC

6-5. BLANK OUTPUT (㉔ Pin)

This is for output to mute CRT DISPLAY.

Normally "L" is output, and "H" is output at muting. BLANKING OUTPUT is output at selecting channel and POWER ON/OFF. For selecting channel, selecting starts after changing BLANKING OUTPUT to "H", and it is changed again to be "L" after 500msec. from the starting (or at that point if it is changed before).

6-6. AFT-UP/DN INPUT (㉝ & ㉜ Pins)

This is to input the information on whitch AFT depends. Polarity is positive logic.

Ⅳ. VIF/SIF SECTION

The VIF/SIF section comprises CX20014A and its externally connected parts, and CX20014A is provided with a VIF output terminals designed for the AFT function and the audio multiplex system.
The block diagram is shown in Fig. Ⅳ-1, and the outlines of the terminals are given in the table that follows.
Below, the functions of CX22014A are outlined block by block.

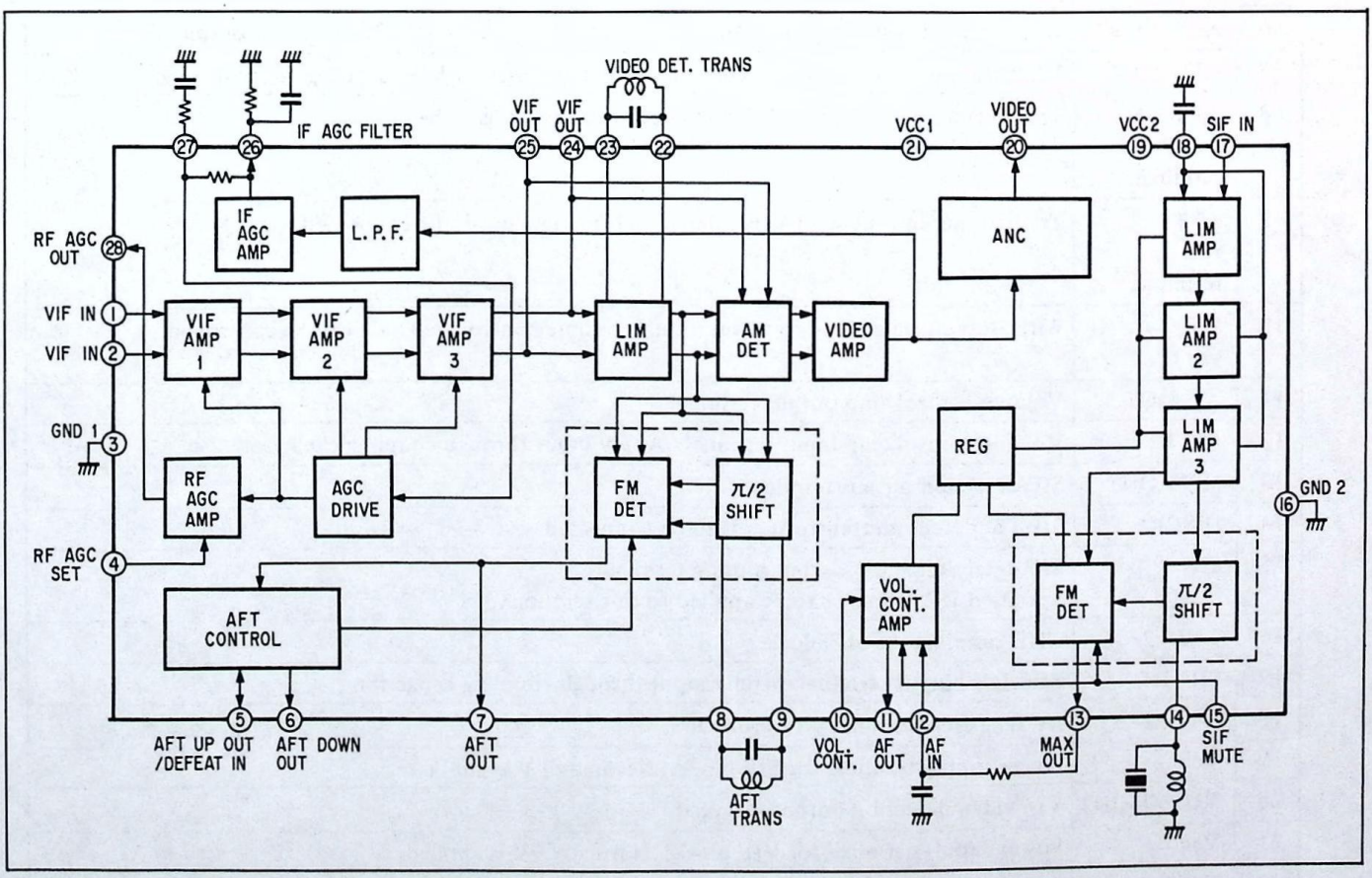

Fig. Ⅳ-1 Block Diagram

Pin No.	Code	Description
1	VIF IN	VIF signal input terminal. Apply input through coupling capacitor.
2	VIF IN	VIF signal input terminal. Apply input through coupling capacitor.
3	GND 1	GND terminal for VIF block.
4	RF AGC SET	When a VIF input above the level of the voltage applied to the terminal is received, the output from pin 28, RF AGC output terminal lowers.
5	AFT UP OUT/ DEFEAT IN	When the VIF input signal frequency drops below a preset level, DC voltage is output.
6	AFT DOWN	When the VIF video signal frequency rises above a preset level, DC voltage is output.
7	AFT OUT	DC voltage is output in accordance with the frequency of VIF video signal frequency.
8	AFT transf. terminal.	Transformer in tune with VIF video signal frequency is to be connected.
9	AFT transf. terminal.	Transformer in tune with VIF video signal frequency is to be connected.
10	Vol Cont	With DC voltage applied to this terminal, volume control amp gain can be controlled.
11	AF OUT	Volume control amp output terminal.
12	AF IN	Volume control amp input terminal. Apply input through coupling capacitor.
13	MPX OUT	SIF detection output terminal.
14	DISCRI	SIF FM detection transformer is to be connected.
15	SIF MUTE	SIF detection audio output muting terminal. Specified DC voltage is to be applied to this terminal.
16	GND 2	GND terminal for SIF block.
17	SIF IN	SIF signal input terminal. Apply input through coupling capacitor.
18	SIF IN	DC feedback terminal. AC ground.
19	Vcc 2	Power supply terminal for SIF block. Normally 9V is applied.
20	VIDEO OUT	VIF video detection output terminal.
21	Vcc 1	Power supply terminal for VIF block. Normally 9V is applied.
22	VIDEO Det. Transf. terminal	Transformer in tune with VIF video signal frequency is to be connected.
23	VIDEO Det. Transf. terminal	Transformer in tune with VIF video signal frequency is to be connected.
24	VIF OUT	Amplified VIF signal output terminal.
25	VIF OUT	Amplified VIF signal output terminal.
26	IF AGC fil. terminal.	IF AGC filter connection terminal.
27	IF AGC fil. terminal.	IF AGC filter connection terminal
28	RF AGC OUT	Outputs AGC voltage to tuner according to VIF input signal level.

1. VIF amp circuit

The VIF amp. consists of three V_{CE} saturation type AGC amps connected in cascade.

The use of VCE saturation type AGC amps resulted in gain control free from input impedance deviation and characterised by good liniarity.

Operation of V_{CE} saturation type AGC amp

In the circuit shown in Fig. Ⅳ-2, when the supplied control voltage Vc is sufficient to secure sufficient V_{CE} for transistors Q1, Q2, Q3, and Q4, the full gain state is obtained, and V_{CE} for Q1 and Q2 decreases with the rise of Vc until Q1 and Q2 enter the saturation range to start controlling gain.

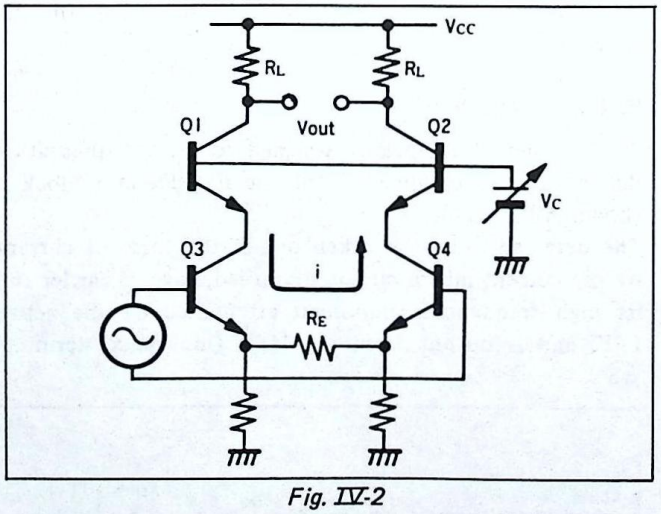

Fig. Ⅳ-2

During the saturation phase, transistor Q1 (Q2) in the saturation stage is being driven by signal current sourse transistors Q3 (Q4) (Fig. Ⅳ-3).

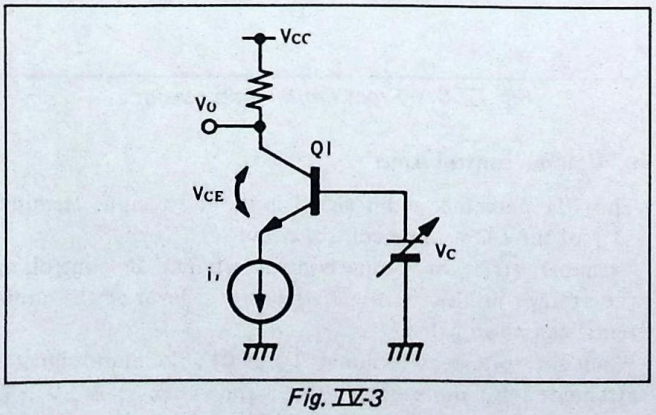

Fig. Ⅳ-3

The maximum gain attenuation of VIF amp is determined by the ratio between the base impedance and the collector impedance of the saturation stage transistor.

The amps in the respective stages are described below. The amp gains and the gain attenuation of the respective stages were determined in consideration of S/N, linearity and other performances.

For gain attenuation, the delayed AGC mode is used, and AGC is applied from the rear stage forward to improve S/N. Fig. Ⅳ-4 shows the output characteristics of the respective stages. Stage 3 AGC starts at input Vinl, and stage 2 starts at input Vin2, stopping stage 3 AGC thereafter.

At Vin3, stage 1 AGC starts, and stage 2 AGC stops. This is how the delayed AGC operates.

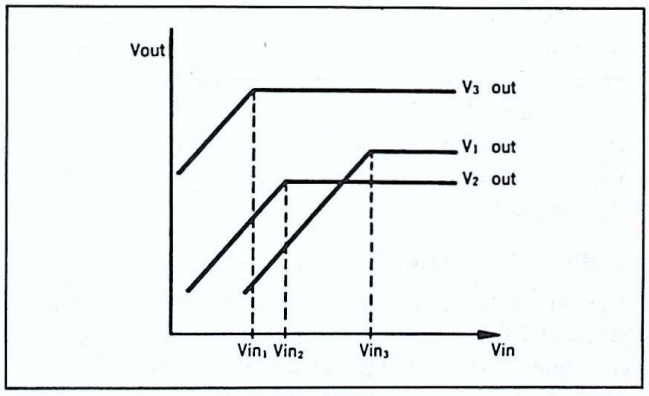

Fig. Ⅳ-4

2. VIF AGC drive circuit

The VIF AGC drive circuit generates three AGC control voltages from the gain control IF AGC voltage produced by the IF AGC amp and the IF AGC filter to drive the delayed AGC by the VIF AGC amp.

3. Video detection circuit

The video detector used in CX20014A is of the pesudo sync detection type, as shown in Fig. Ⅳ-5.

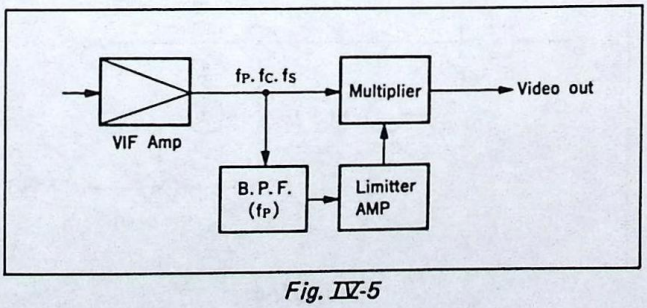

Fig. Ⅳ-5

When video signal fp, chroma signal fc and audio signal fs enter the multiplier, simultaneously, the portion of fp separated by the band pass filter is input to the multiplier as the switching carrier to perform detection.

With this method, audio trap becomes unnecessary between VIF stages.

The band pass filter for switching carrier generation is in tune with f_p. Tuning coil and capacitor are connected between terminals ㉒ and ㉓.

4. IF AGC Amp circuit

The VIF AGC amp is of the peak hold type, and is driven by voltage.
The video signal received from the video out terminal are first stripped of the 4.5MHz component, which is not needed for the AGC operation, by the active low-pass filter, and then compared with the reference bias determined by the sync end DC and the IC interior to have the difference amplified by the AGC amp, peak held by the filter and conducted to the drive circuit.
The AGC filter is composed of the resistor and capacitor and IC internal rasistor. .connected between terminals ㉖ and ㉗ .

5. RF AGC Amp circuit

The RF AGC amp compares the voltage (set voltage) at terminal ④ and the IF AGC voltage by the differential amp, and outputs RF AGC voltage to terminal ㉘ .
The set voltage of RF AGC is adjusted to an input field (RF 68dBμ/75Ω open) of 6.5 ±0.5V at the AGC terminal of TU101. The full gain voltage of RF AGC is 7.3V approx.

6. AFT circuit

Fig. Ⅳ-6 shows the AFT detection system. Basically, it is of the phase detector type, as before, but to improve the AFT S characteristics during weak field, its both inputs to the multiplier are taken out after the limiter amp where the carrier level is high.

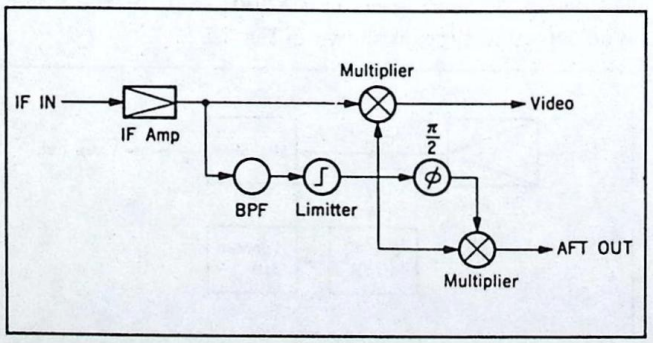

Fig. Ⅳ-6

Fig. Ⅳ-7 shows the equivalent circuit to the AFT detection 90° shifting circuit.

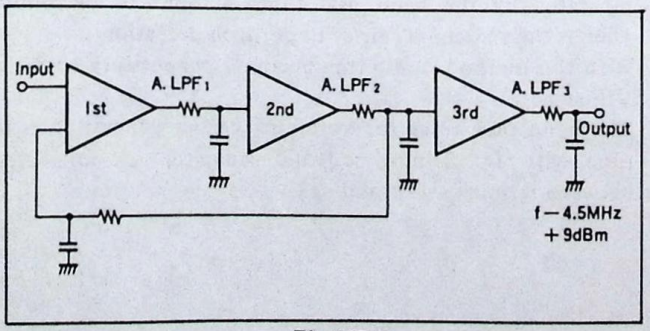

Fig. Ⅳ-7

The terminal ⑦ voltage is approximately 4.6V when just tuned by the AFT output.
When video intermediate frequency carrier (fp) shifts low, the AFT output voltage at terminal ⑤ rises. The max. voltage is approximately 8V.
When fp shifts high, the AFT output voltage at terminal ⑥ drops, with the minimum level at around 1V.

7. SIF limiter Amp

To secure sufficient audio sensitivity, the SIF limiter amp is composed of three stages of differential amps.
AVCF VIDEO characteristcs
The audio intecarrier (4.5MHz) is input to terminal ⑰ from terminal ② via BPF, and is conducted to the FM detector inside the IC.

8. FM detector block

The FM detector block is designed to use the quadrature detection. The composition of the FM detector block is shown in Fig. Ⅳ-8.
The detected output is taken out in the form of current by the current mirror circuit, amplified, have its carrier and its high frequency component attenuated by the active LPF, and is output from the MPX (multiplex) terminal ⑬ .

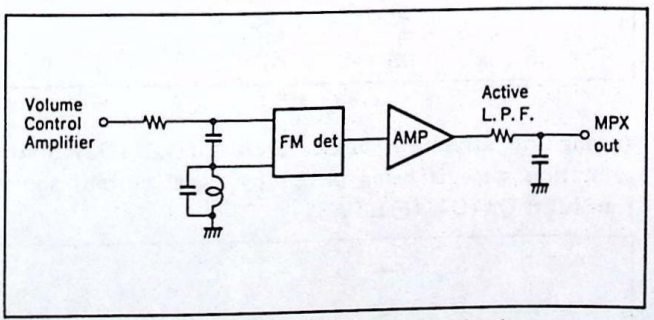

Fig. Ⅳ-8 From limiter amp output

9. Volume control Amp

The FM detected audio signal is input to input terminal ⑫ of the DC volume control circuit.
Terminal ⑩ is the volume control terminal. By controlling the voltage at this terminal, the output level of the audio signal can be adjusted.
When the voltage at terminal ⑩ is 0V, the audio signal is attenuated by more than 70dB, and when it is 5V, the volume amp becomes a 0dB amp. The output of the volume control circuit is obtained at terminal ⑪ .

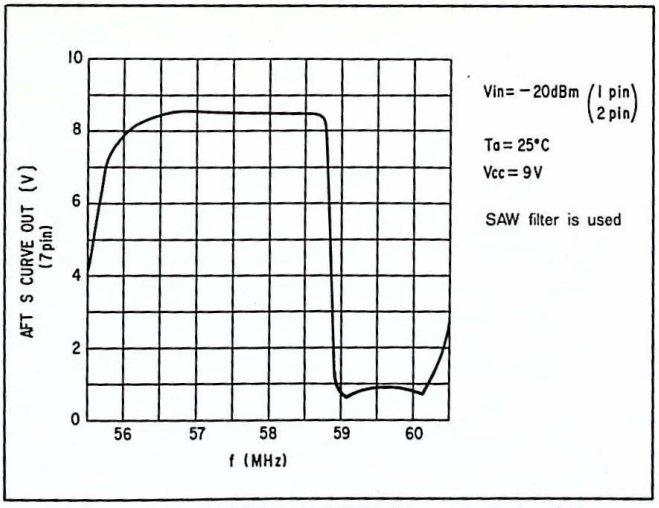

Fig. IV-9 AFT S CURVE Characteristics (1)

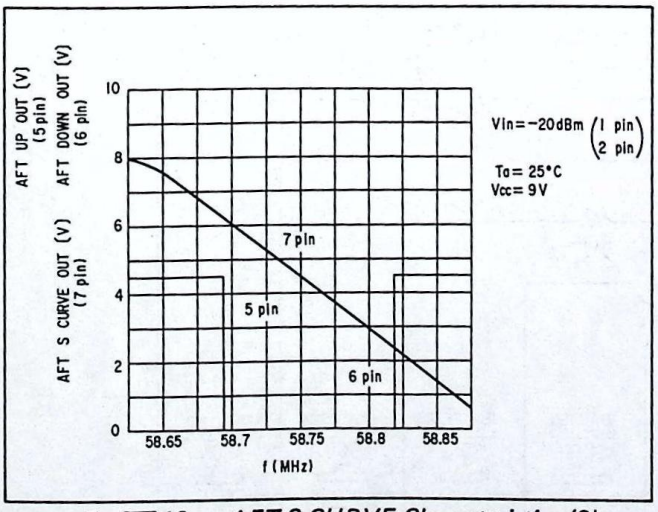

Fg. IV-10 AFT S CURVE Characteristics (2)

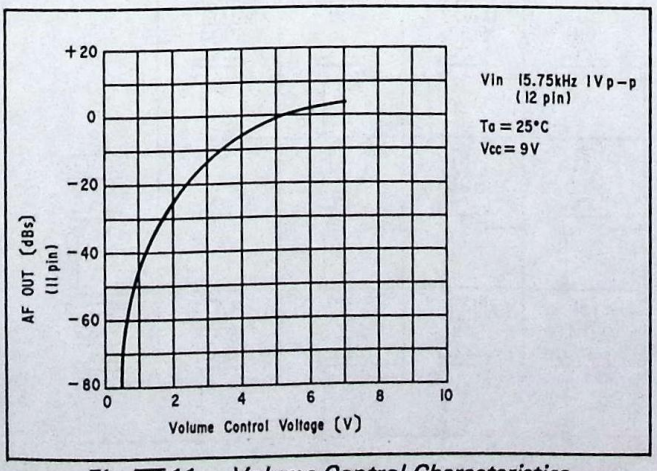

Fig. IV-11 Volume Control Characteristics

Ⅴ. KEY CONTROL BLOCK

The KEY control block consists of the 10-kety circuit on board MA, and the alarm circuit on board MC. The 10-key circuit block diagram is shown in Fig. Ⅴ-1, and that for the alarm circuit is shown in Fig. Ⅴ-2.

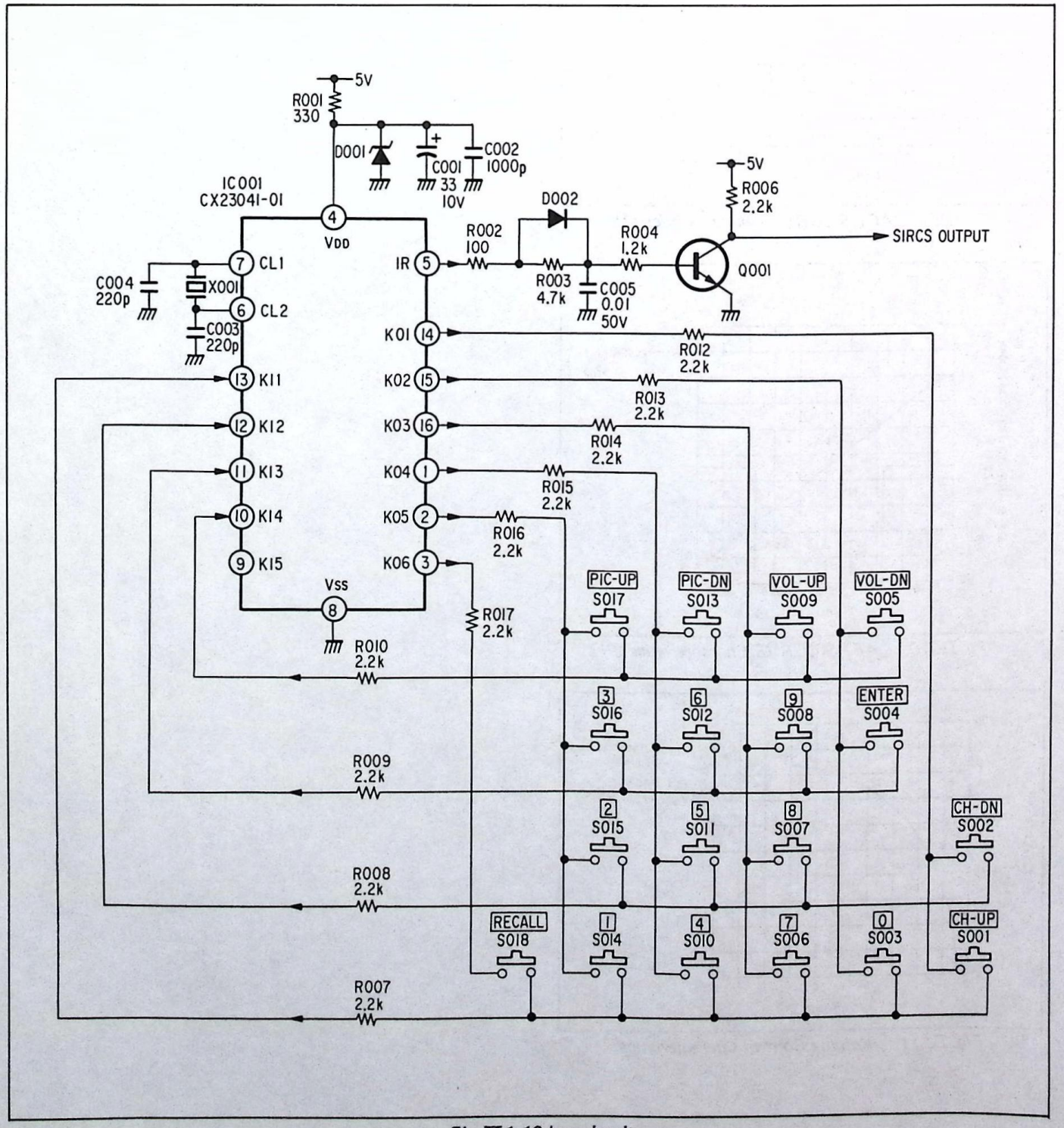

Fig. Ⅴ-1 10-key circuit

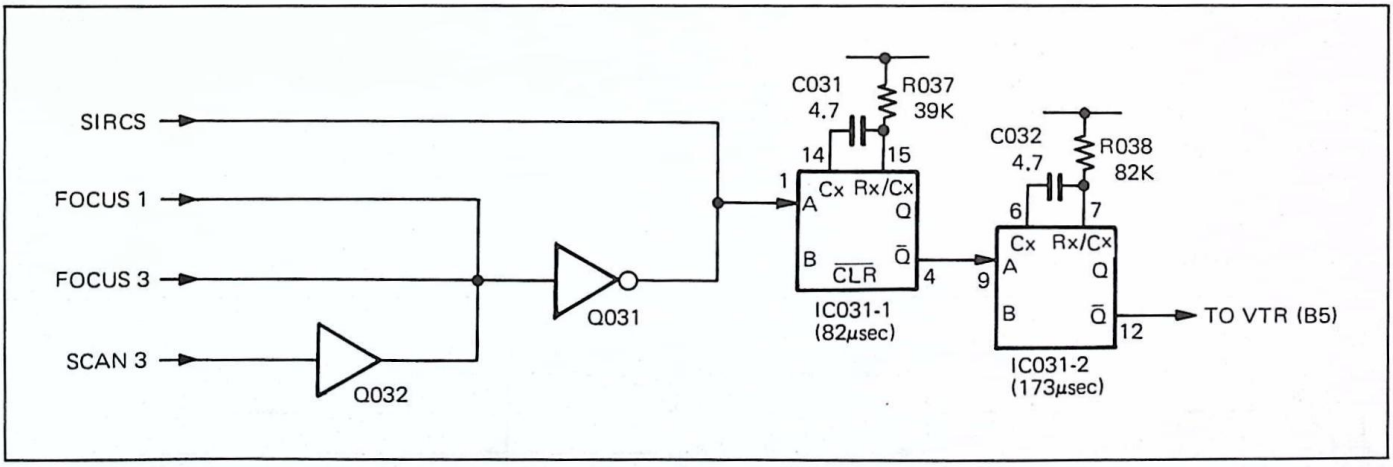

Fig. Ⅳ-2 Alarm circuit

1. 10-Kye Circuit

Because IC1101 (CX520-108N) has no 10-key function, IC001 (CX23041-01) used for wireless remote control is used, with the SIRCS signals directly output to IC1101, instead of infrared ray signals.

The operation of IC001 (CX23041-01) is as follows. IC001 (CX23041-01) outputs pulses from KEY OUT, and when a key is pushed, determines the pushed key on the basis of the KEY IN terminal to which the pulse is input, and outputs a SIRCS code corresponding to the pushed key from the IR terminal.

The above is the simplified description, and more concrete operation process is described below.

1-1. Initial state

This IC can be set to the initial state to reduce power consumption, whiel no keying input is present.

1-1-1. Initialized IC state

- Clock is off
- Current I_{DD} = 5μA (max.), V_{DD} = 5.1V
- Key output terminals (K01 to K06) are fixed at "1" level
- Remote control output (IR) terminal is fixed at "0" level

1-1-2. Clearing initial state

When any input is entered to the key input terminal, the initial state is immediately cleared.

1-1-3. Shifting to initial state

1) Power ON clear function
   - While power is ON, terminals KI1 through KI5 must be all open.
   - In the worst case, the initial state is restored after short outputing of remote control output.
2) When all the following considtions are satisfied upon completion of operation.
   i) The key input terminals are all "0".
   ii) Remote control outputs are all output.

1-2. Switching ON detection (ready to input)

When the five key input terminals (KI1 – KI5) are ORed to "1" (any one is "1") continuously for 9.0 to 9.6ms, this is taken as the result of switching ON, and the key-reading state occurs.

During the ready-to-input state, the key output terminals (KO1 – KO6) are fixed at "1".

1-2-1. When one switch is turned on

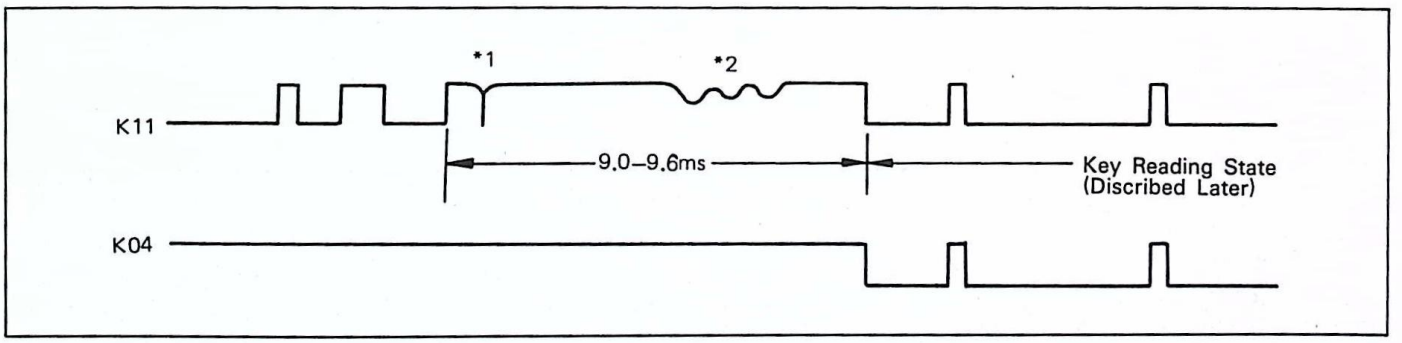

Fig. V-3

Note 1. Negative pulses in the order of microsecond sometimes escape detection, and allow the 9.0 – 9.6ms counting to keep on.

Note 2. Input fluctuations above the key input circuit thresh-hold ($\approx \frac{VDD}{2}$) do not cause the interruption of continuous input of "1".

1-2-2. Example of ORing

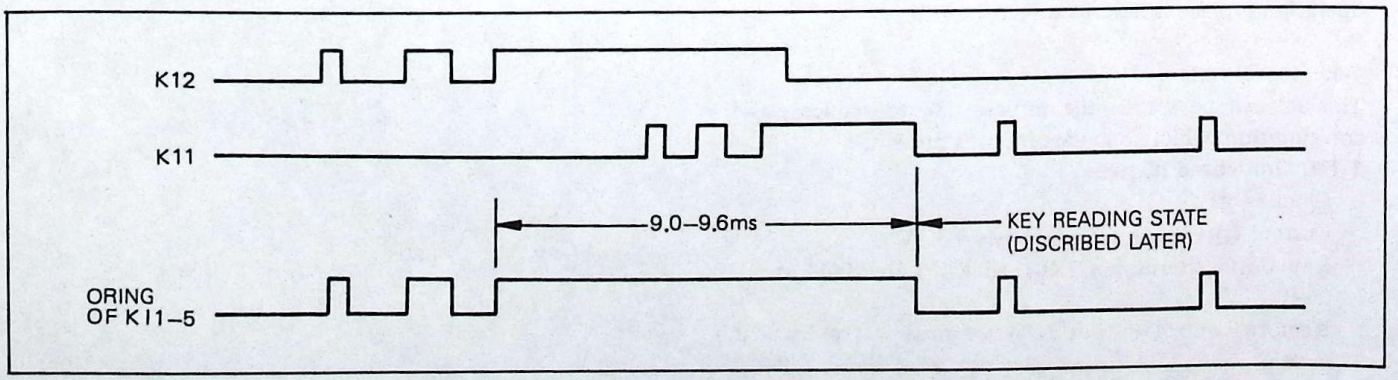

Fig. V-4

1-2-3. Shifting to ready to input state

1) During the initial state, when KI1 – KI5 are ORed to "1", the ready-to-input state occurs.
2) During a key reading state, when a fault reading is made, the ready-to-input state is started at the end of the input frame.

1-2-4. Clearing ready-to-input state

1) When the ORed result of KI1 – KI5 continues to be "1" for 9.0 – 9.6ms, a key reading state occurs.
2) When KI1 – KI5 are ORed to "0", and the remote control output is completely off, the initial state occurs.

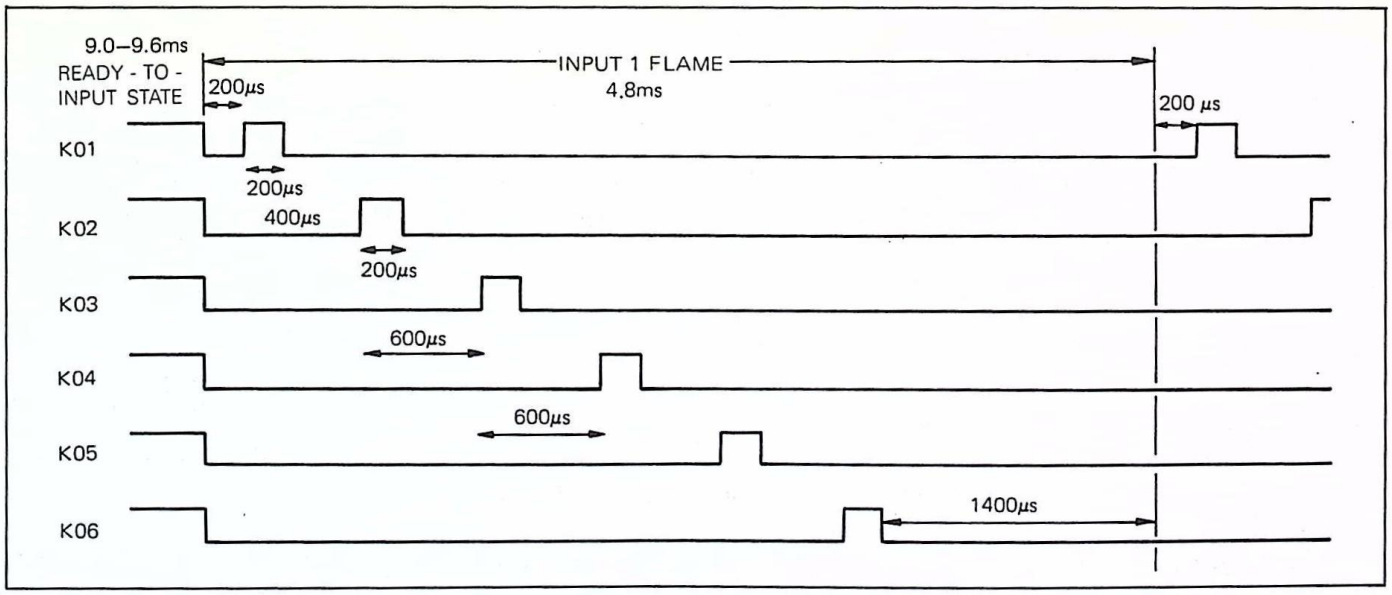

Fig. V-5 KO1 – KO6 output waveform

1-3. Key matrix output terminal output waveform

1-3-1. Initial state and ready-to-input state

Continuously "1" is output. When any switch is turned on, that state is immediately transmitted to the key input terminal, directly.

1-3-2. Key reading state

From the moment the ready-to-input state ends, 200μsec wide pulses are output from KO1 to KO6 sequencially at time differences of 600μsecs.

The input frame is 4.8ms (0.6ms x 8 terminals), and frame are continuously output with each unit consisting of one frame until faults (described later) will be detected in key reading.

1-4. Key reading state

After a switch is turned on, 9.0 – 0.6msec are counted in the ready-to-input state to avoid chattering, and then, the key reading state for identifying the pushed switch to generate a data code for the pushed switch for outputting correct remote control signal.

1-4-1. Identifying keys (normal reading)

One key out of 30 is identified by means of 5 key input terminals and 6 timing types.

The 6 timing types mean the pulse outputting time sequence KO1 through KO6 of 200μsec pulses, as shown in the key output terminal waveform diagram.

The IC reads the key input state during the very short time from the leading edge of each 200μsec pulse to approximately the ⅔ of the pulse width.

One reading ends in one input frame (4.8ms), and the presence of faults, and the turned on switch, if any, are checked at the end of each input frame.

If the data codes detected and generated in the first two input frames agree each other, a remote control signal corresponding to that data code is started to be output after the completion of the 2nd frame. (The remote control output will be described later.)

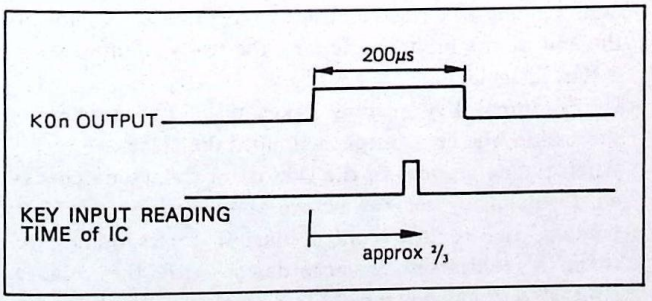

Fig. V-6

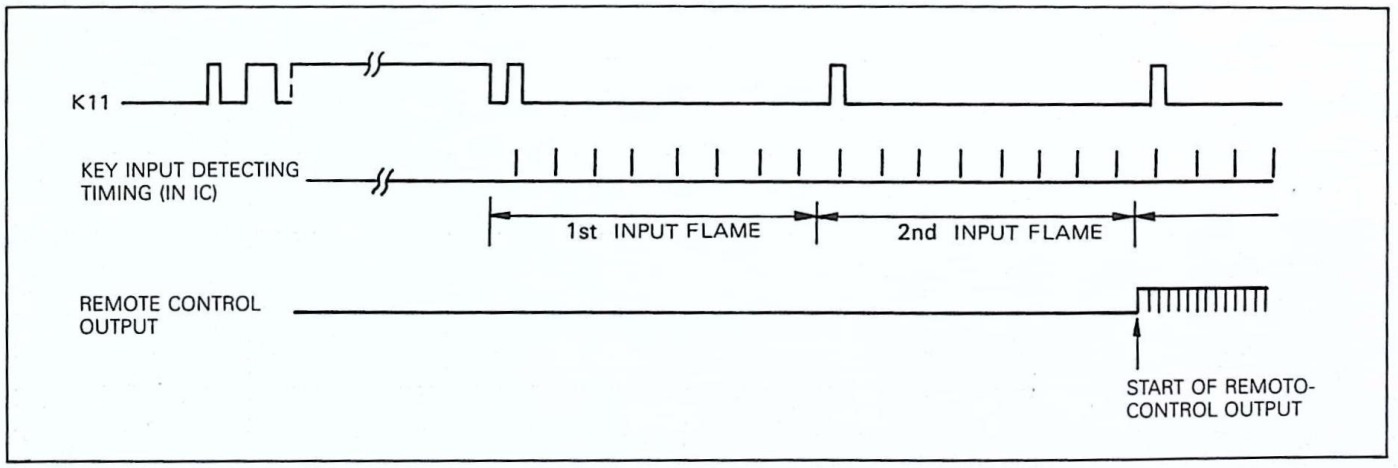

Fig. V-7 Example: when switch S1 is turned ON

1-4-2. Fault reading

1) A11 "0" (Note 1)
   Within one input frame, no effective input (level "1") is detected from any of the key input terminals, and at any of the six timings described earlier.
2) Double keying
   When input signals corresponding to the pushing of two or more keys within one input frame are identifed.
3) Data code disagreement
   In succeeding two input frames, the data codes generated one each in each frame based on the respective key inputs are different.

The above three cases constitute fault reading. When fault reading is detected, the key reading state ends at the end of the input frame, and the ready-to-input state is started again.

Until normal key reading takes place two frames in succession, the next output will not take place.

When the data codes in the two input frames are checked to be in agreement before the detection of fault reading, the remote control output corresponding to them is completed in accordance with the remote control output sequence. (The remote control output completing sequence will be described later.)

When a fault reading is detected while a remote control signal is being output, the key input receipt is disabled until that remote control signal will be output completely. When a key input is received upon completion of a remote control outputting process, the 9.0 – 9.6msec counting in the ready-to-input state, so far suspended, is started.

The key reading state remains on unless a fault reading is detected (Note 2).

The states of Note 1 and Note 2 also serve as the detection of the release of the switch. When one of the double push switches is released, and the data code of the remaining switch agrees in two input frames, the corresponding remote control output will be output at least for 3 frames.

1-4-3. Exceptions to double keying

1) When two or more switches connected to the same KO terminal, S006 – S009, are pushed together, the normal double keying detection is made up to two keys, but when three or more keys are pushed, the Vih level for the Ki terminal will not be satisfied, and in the worst case, the code for one of the pushed switches may be output as a remote control signal, similar to the following three cases.
2) When two of the switches connected to the same Ki terminal, such as S001, S003, and S006, are pushed together, the Ki terminal voltage becomes the intermediate voltage, and fault reading is detected by the double keying detection circuit or by the A11 "0" detection circuit at high probabilities, but there is also a possibility that the data code for one of the pushed switches (when for example, S001 and S006 are keyed, the data code of either S001 or S006) will be output.

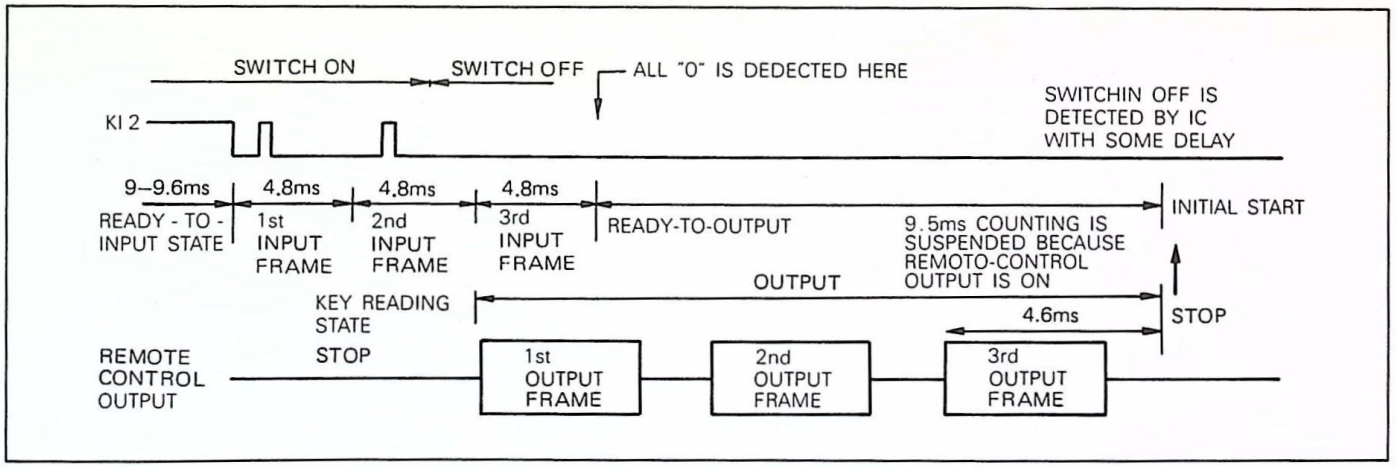

Fig. V-8. All "0" Detection

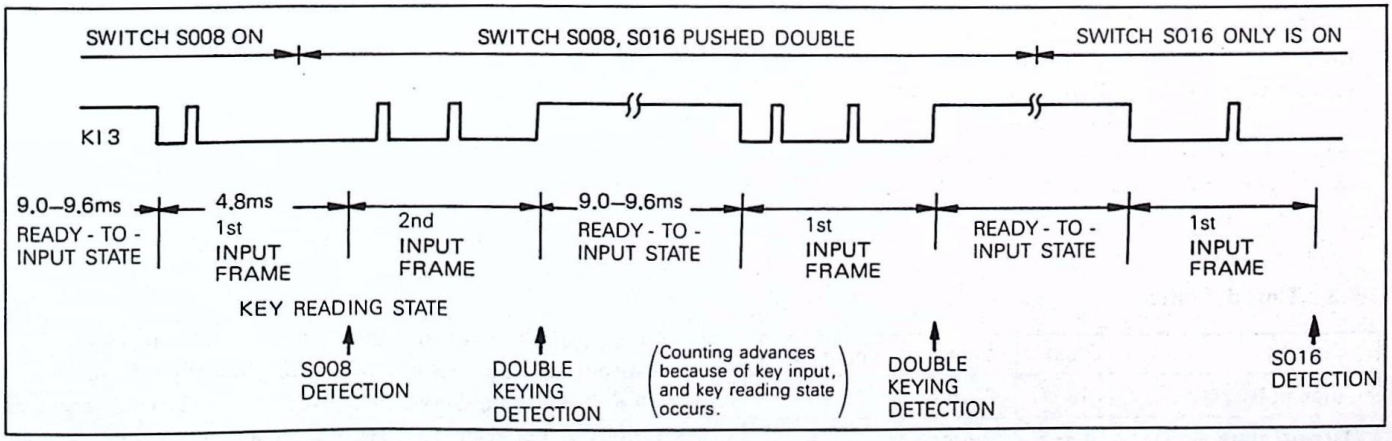

Fig. V-9. Double Keying

Note: 2nd exception case of double keying under 1-4-3 where the double keying direction circuit operated.

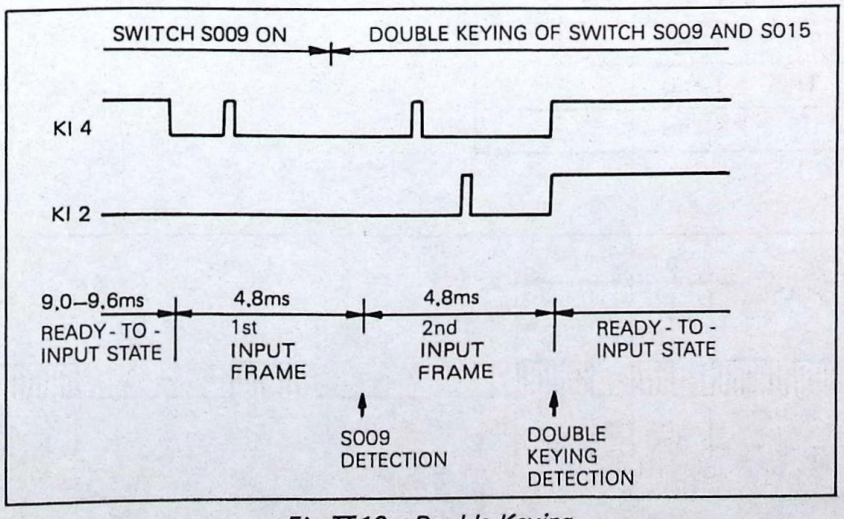

Fig. V-10. Double Keying

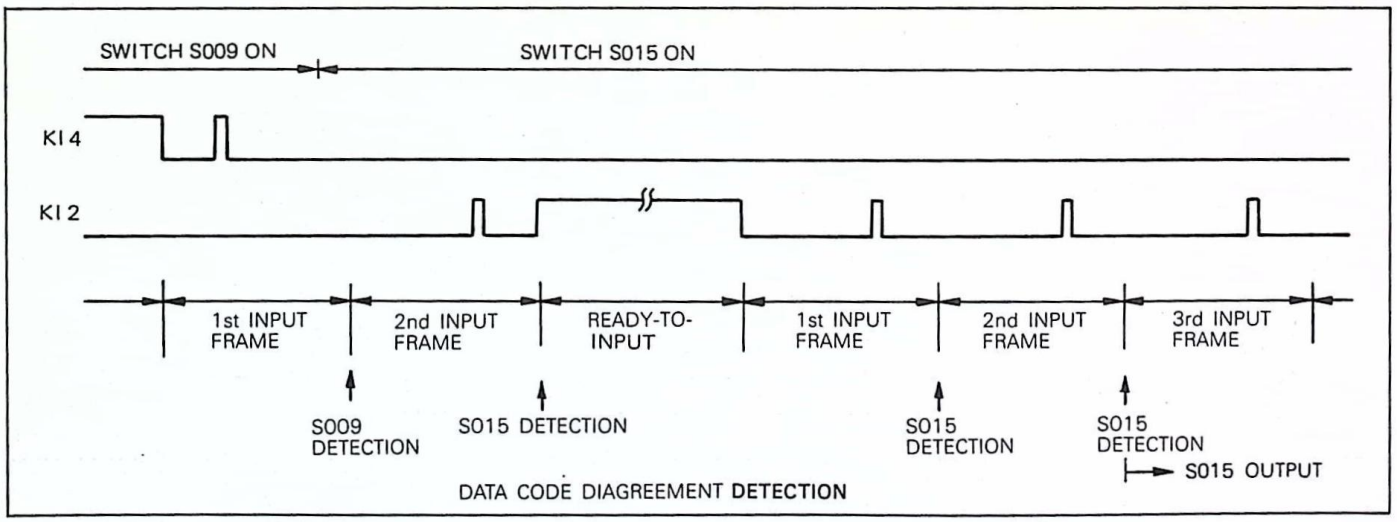

Fig. Ⅴ-11 Data code disagreement

1.5 Output waveform

1-5-1. Modulation carrier 40kHz

Duty : 33.3% ±2%

Measuring condition: Constant temperature, VDD = 3V

IR terminal dummy load only C_L = 30pF

However, for the first and last pulses of 96, 24 and 48 pulses, for quide pulse, data "0" and data "1", the duty may be 33.3 ±3.3%.

1-5-2. Time definition

	Code	Time	No. of Pulses
Guide pulse	t_g	2.4ms	96
Data off time	t_{OFF}	0.6ms	24
Data on time			
Data "0"	t_{ON}	0.6ms	24
Data "1"		1.2ms	48
Data "0" period	To	1.2ms	–
Data "1" period	T1	1.8ms	–
Output frame interval	tf	4.5ms	–

For continued outputting of the same data, frames are output continuously at a period of 45msec per frame.
When one data is switched over to a next data, the time interval between the two is generally not guaranteed. (Fig. Ⅴ-12)

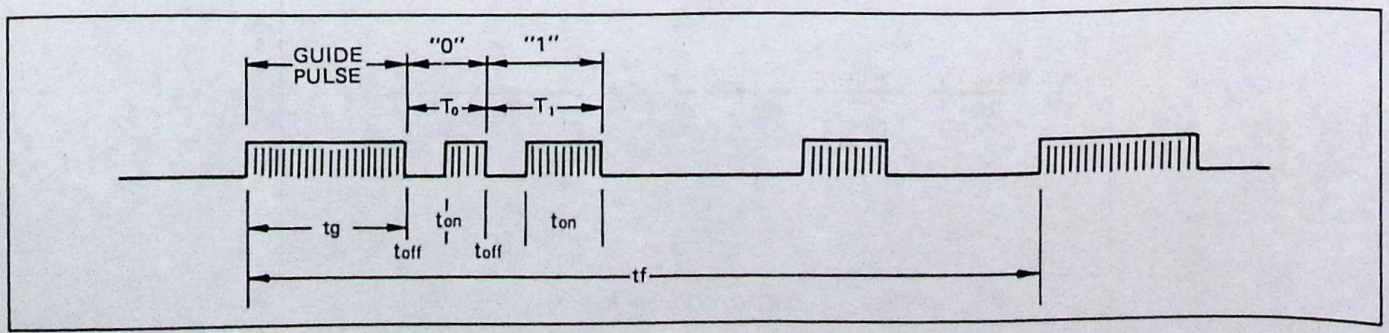

Fig. Ⅴ-12 Output frame interval

1-5-3. Output waveform

1) The data sending out sequence is: 1) guide pulse, 2) data code (from 2^0 sequentially to 2^5), 3) word code (from 2^6 sequentially to 2^{11}).
2) The output frame interval (ft) remains constant at 45msec, regardless of changes in data bits.

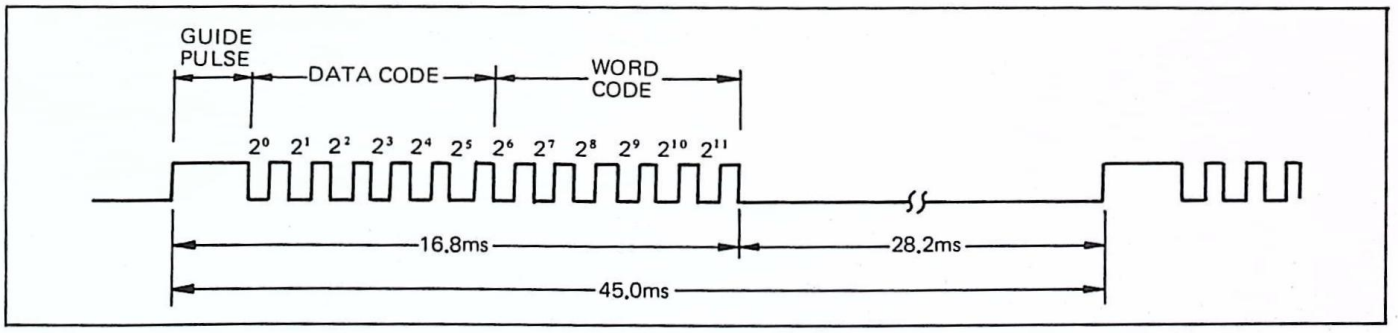

Fig. V-13 Time when all data are "0"

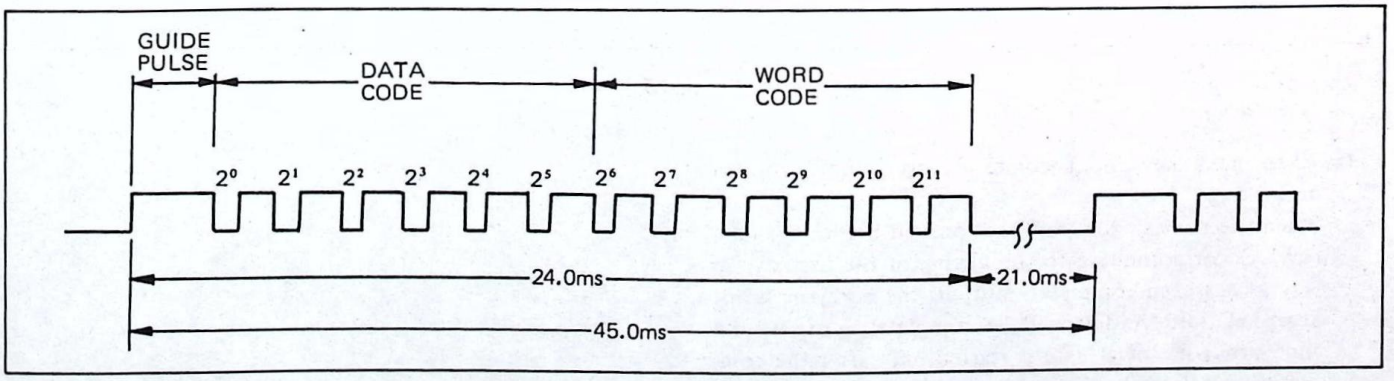

Fig. V-14 Time when all data are "1"

3) The output waveform keeps on being output while the key input data remains to be input normally. When the key input data stops to be input (switch off), this is detected, and the outputting is stopped at the end of the output frame which is being output at the time of detection.
However, the number of output frames at that time is less than 3, the outputting process continues until three frames will be output, and then stops.

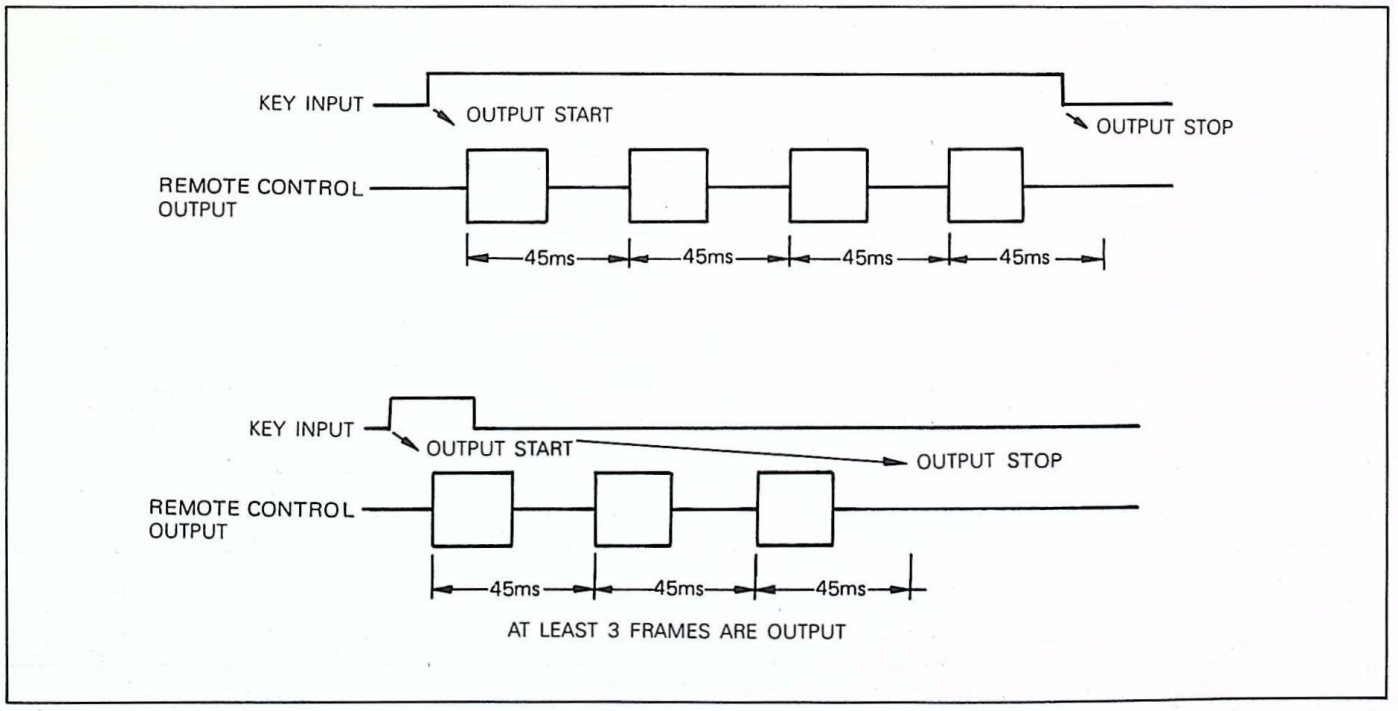

Fig. V-15

4) When next key input comes during remote control outputting.
When the next switch (say b) is pushed before the data (say A) corresponding to the keying of the first switch (say a) has been completely output, the b keying is not accepted until A data will be completely output, and the outputting of B data is started only after the completion of data A, the ready-to-input state for 9.0 – 9.6msec, and the conformation of the agreement of the two input frames.

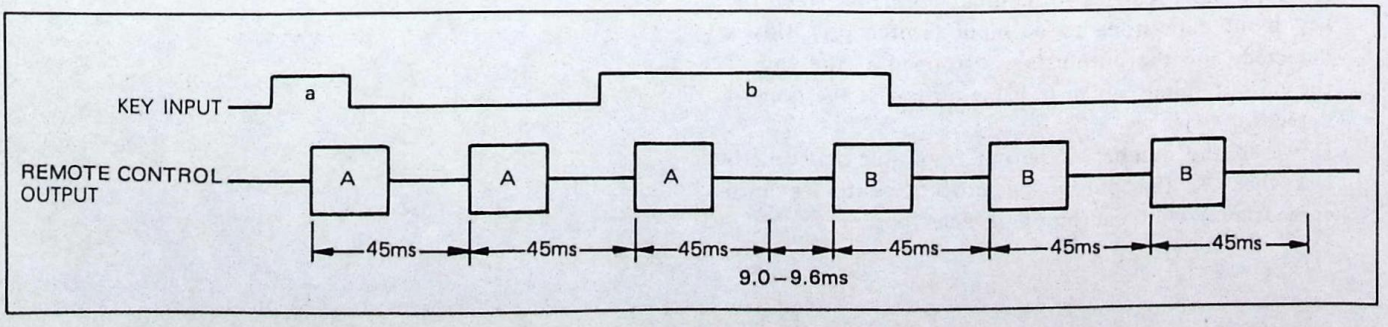

Fig. V-16

Note: The time marked by * is the sum of 9.0 – 9.6msec for ready-to-input and 9.6msec for two input fromes.

1-5-4. Output data

Key Name	Data Code							Word Code				
1	0	0	0	0	0	0	0	1	0	0	0	0
2	1	0	0	0	0	0	0	1	0	0	0	0
3	0	1	0	0	0	0	0	1	0	0	0	0
4	1	1	0	0	0	0	0	1	0	0	0	0
5	0	0	1	0	0	0	0	1	0	0	0	0
6	1	0	1	0	0	0	0	1	0	0	0	0
7	0	1	1	0	0	0	0	1	0	0	0	0
8	1	1	1	0	0	0	0	1	0	0	0	0
9	0	0	0	1	0	0	0	1	0	0	0	0
0	1	0	0	1	0	0	0	1	0	0	0	0
ENTER	1	1	0	1	0	0	0	1	0	0	0	0
CH-UP	0	0	0	0	1	0	0	1	0	0	0	0
CH-DN	1	0	0	0	1	0	0	1	0	0	0	0
VOL-UP	0	1	0	0	1	0	0	1	0	0	0	0
VOL-DN	1	1	0	0	1	0	0	1	0	0	0	0
PIC-UP	0	0	0	1	1	0	0	1	0	0	0	0
PIC-DN	1	0	0	1	1	0	0	1	0	0	0	0
RECALL	0	1	0	1	1	1	0	1	0	0	0	0

2. ALAR CIRCUIT

The alarm circuit detects, by the 1st monostable circuit (IC031-1), the first trailing edge of the pulse which is output when any one of the user control switches on the MA board is pushed, while the output of these switches are all being input. Then, the 2nd monostable circuit (IC031-2) outputs the pulse for sounding the B5 buzzer circuit in 173μsec after keying. The monostable circuit is retriggerable so that when the key is pushed once, the buzzr sounds once, and even when the key is kept pushed, the buzzer does not sound contifuously.

VI. SIGNAL SWITCHING BLOCK

Fig. VI-1 shows the block diagram of the signal switching block. It inputs three signals, the television signal received by the tuner, the signal from the external video input signal, and the signal received from the VTR (B5), and IC303 and IC304 switch them over. IC303 (CX894) switches over the video signal, and IC304 (CX894) switches over the audio signal. Below, the operation of IC303 (CS894) and IC304 (CX894) is described.

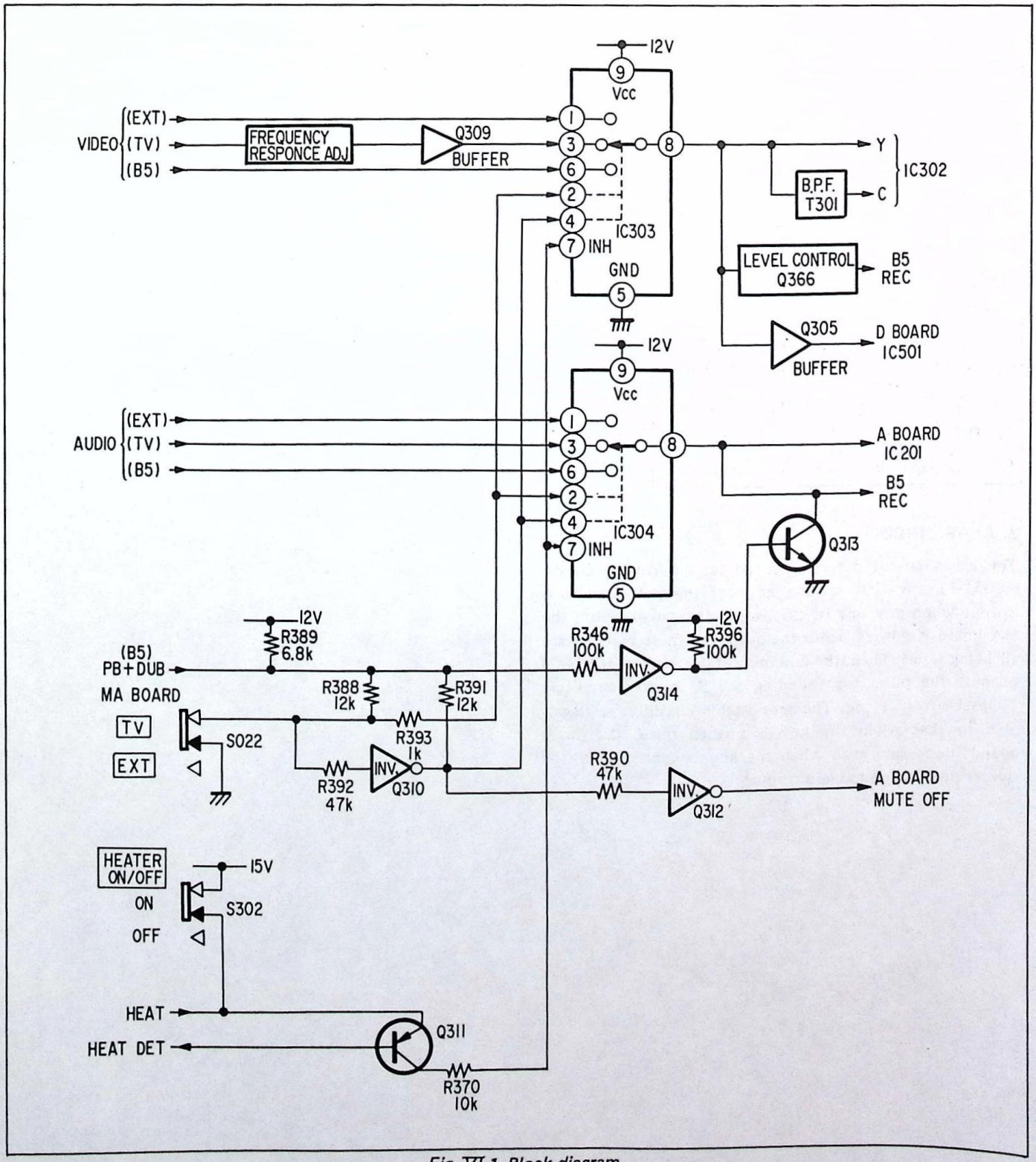

Fig. VI-1 Block diagram

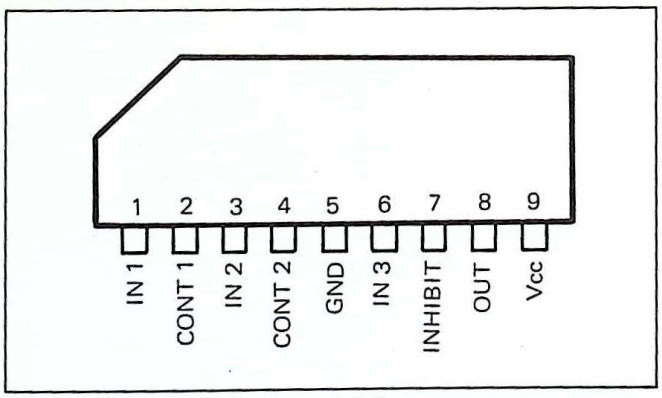

Fig. VI-2

INH	CONT1	CONT2	OUT
L	L	L	IN3
L	L	H	IN2
L	H	L	IN1
L	H	H	No Select
H	–	–	No Select

Pin ② and pin ④ of IC303 and IC304 are connected to S022 on board MA for switching between TV and EXT. To switch to VTR, turning on PLAY will turn on VTR with priority. To be concrete, when the PLAY state is turned on, signal (PB + DUB) changes from "H" to "L", and pins ② and ④ become "L" regardless of the state of S022.
In this case, the VTR audio signal is output to REC in addition to SPEAKER, that is, the PLAYBACK sound of the VTR is returned to the VTR. Therefore, Q313 is turned on to effect muting.
Only when TV is selected, the MUTE OFF signal is turned to "L" to stop the CRT display blank pulse of board A.

The CRT display blank pulse is the pulse for blanking the upper half of the CRT field to prevent the display (channel display only) during EXT and VTR.
The above operation modes are summarzed in the following table.

	IC303, 304 ② Pin	IC303, 304 ④ Pin	(MUTE OFF) Signal	PB + DUB (From B5)	Q313 AUDIO Mute (REC)
TV	L	H	L	H	OFF
EXT	H	L	H	H	OFF
VTR	L	L	H	L	ON

To the INHIBIT terminals of IC303 and IC304, Q311 for detecting the VTR HEATER current is connected.
While the VTR heater is operational, heavy heater current flows. The CRT is prevented from displaying anything.

- When HEATER SW is OFF
  No power is supplied to the HEATER, and the HEATER is not usable. When water condensation is present, the VTR is not operational.
- When HEATER SW is ON and VTR has no water condensation
  Since no water condensation is present, the HEATER is not operational, and consequently, TV, EXT, VTR all operate in order.
- HEATER SW is ON and VTR has water condensation
  The HEATER is operational, and consequently, Q311 is turned ON to turn the INHIBIT terminal (pin ⑦ of IC303 and IC304 to "H", and TV, EXT, and VTR are all prevented from outputting. At this time, when the HEATER SW is turned OFF, TV and EXT become usable, although VTR is still unusable.

VII. AUDIO AMP BLOCK

Fig. VII-1 shows the circuit diagram of the audio amp block. The microphone signal from the terminal on the rear side of the set is input through connector BA-9, and is amplified by Q301 and Q302. Then, it is mixed with the TV sound by the microphone mixer volume (RV301). This output is amplified by IC301, Q303 and Q304, and output to the EARPHONE jack and to the SPEAKER.
The amplification by IC301, Q303 and Q304 is power by the 14V power supply, and the charging and discharging of C357 is utilized to obtain the maximum output as shown in Fig. VII-2.

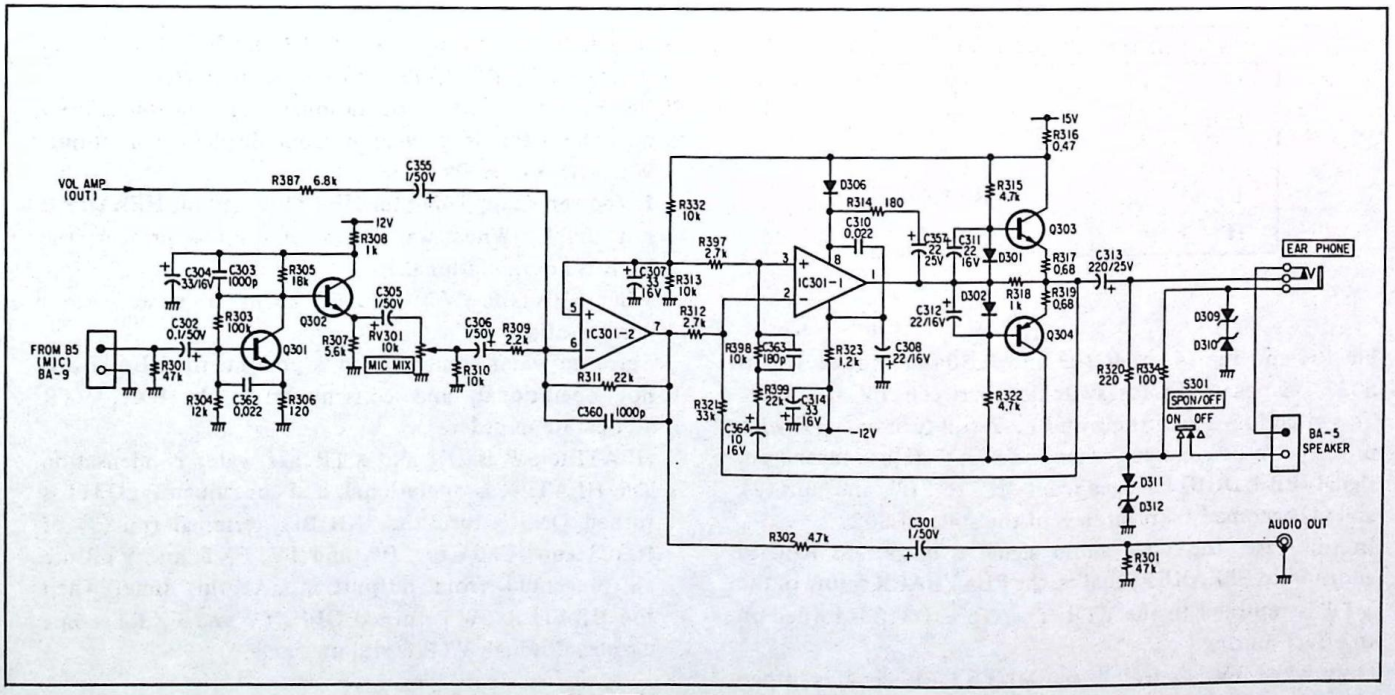

Fig. VII-1 Audio Amp

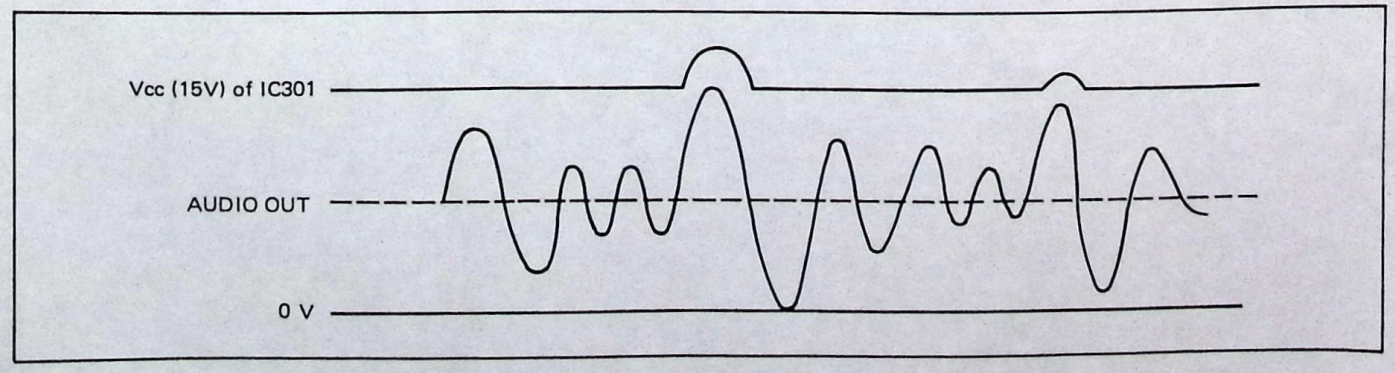

Fig. VII-2

In this way, 3W of output is obtained by 15V power supply.

Ⅷ. Y CHROMA SIGNAL PROCESSING CIRCUIT

The Y CHROMA signal processing circuit consists of CX848 and its externally connected parts. The CX848 color sync system adopts the APC system using the count-down circuit made of a 14.3MHz (4 x fsc) voltage control oscillator (VCO) and an ECL flip-flop.

The video signal and the CHROMA signal are internally matrixed, and the output is in the form of R, G, B color primary signals.

Fig. Ⅷ-1 shows the block diagram of CX848, and Fig. Ⅷ-2 shows the pin layout.

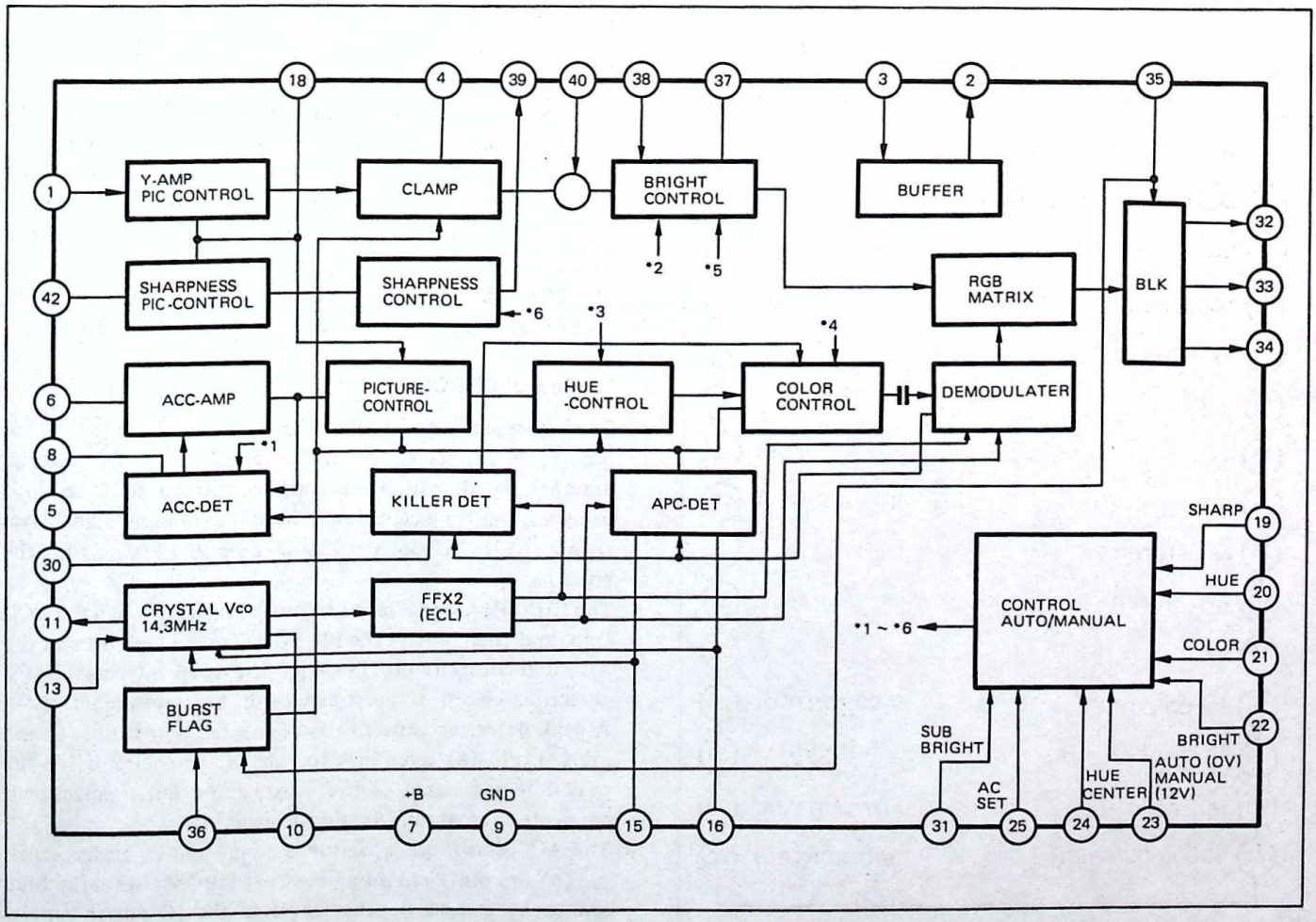

Fig. Ⅷ-1 CX848 block diagram

1. Function

Y-amp, ABL, blanking (BLK), SHARPNESS control, ACC amp, ACC detection circuit, PICTURE control, HUE control, COLOR control, burst flag circuit, matrix amp, CHROMA modulator, 14.3MHz OSC, countdown flip-flop, APC detection circuit, and killer detection circuit.

2. Flow of Y signal

With the DC component cut, the positive polarity 1Vp-p Y signal (sync negative) is input to pin ①. Since the DC voltage of pin ① is approximately 0.7V, and the buffer composed by pins ② and ③ is in the emitter follower type as shown in Fig. Ⅷ-3, it is used when impedance such as the delay line matching impedance is required to be changed.

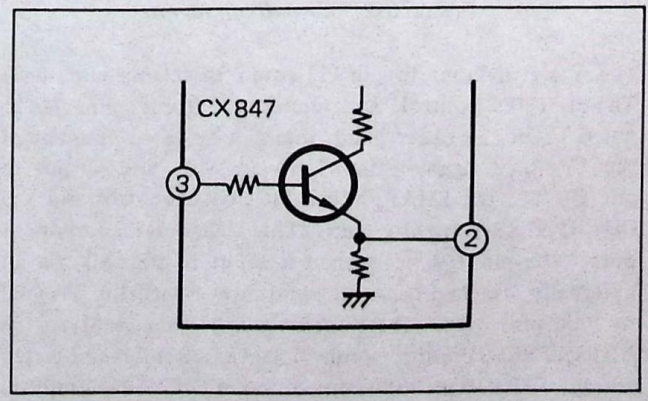

Fig. Ⅷ-3 Buffer circuit

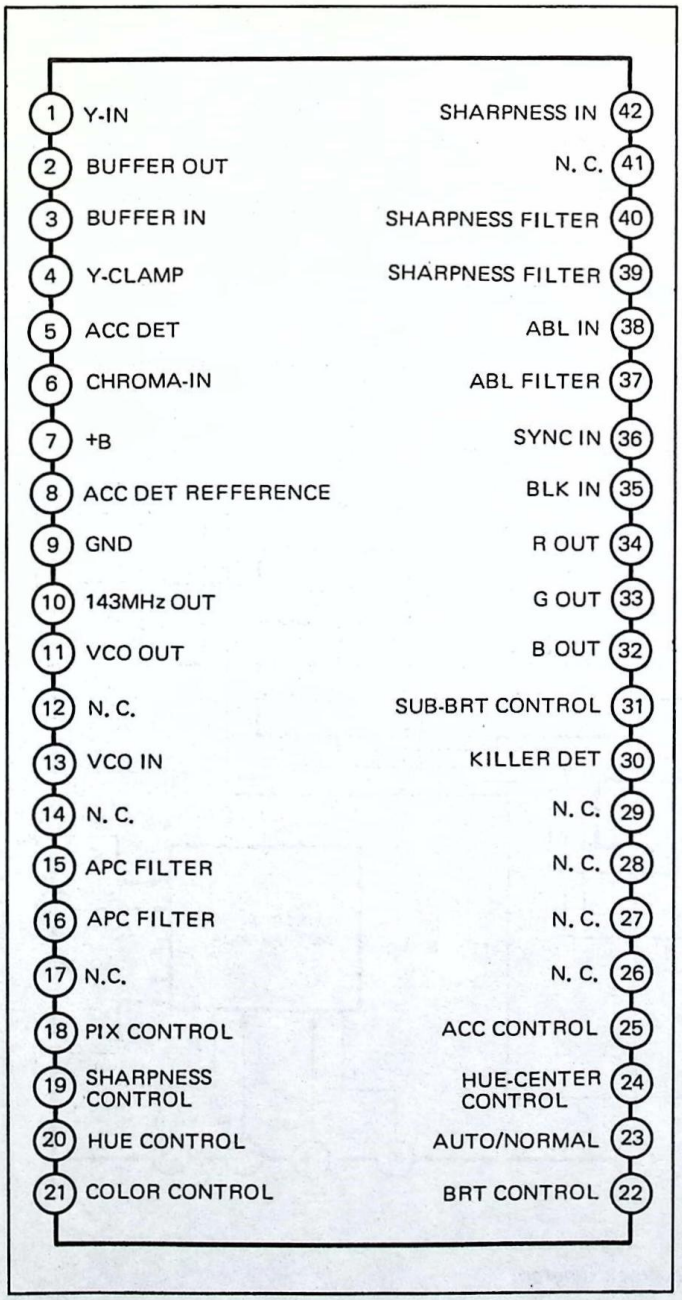

Fig. VIII-2 CX848 pin layout

The Y signal input to pin ① enters the clamp circuit via The PICTURE control. A clamping capacitor is connected to pin ④. On the other hand, the high range component of the 1Vp-p Y signal is input to pin ㊷, and output to pin ㊴ via the SHARPNESS PICTURE control and the CHARPNESS control circuit. The high range component output to pin ㊴ controlled is input to pin ㊵ via an externally attached capacitor, and mixed with the Y signal by this pin ㊵. The mixed signal is then, sent to the BRIGHTNESS control circuit. The ABL circuit is connected to the BRIGHTNESS control circuit CX848 employs the bright ABL mode. The input signal of the ABL is input to pin ㊳.

As the ABL time constant is connected to pin (㊲), the ABL transient is determined.

The ABL controllable voltage range at pin ㊳ is between 4.3 – 2.3V. Therefore, while ABL is off, the voltage of pin (㊳) is high (approx. 5V), and while ABL is on, the voltage of pin (㊳) tends to lower. Accordingly, the DC voltage of pin (㊲) is approximately 0V while ABL is off, and gradually rises when ABL is turned on. A sub-brightness control circuit is attached to the BRIGHTNESS control circuit.

After flowing these diverse control circuits, the Y signal is then sent to the R, G, B matrix circuit for mixing with the COLOR difference signal, and further output as the B, G, R output of pins (㉜), (㉝) and (㉞) via the BLK circuit for connection to the video output. The standard output of pins (㉜), (㉝) and (㉞) is 2.4Vp-p (pedestal – white voltage) at the maximum PICTURE for the 75% color bar signal.

The BLK input signal is applied to pin ㉟ and it becomes operational when a positive pulse above $1V_{p\text{-}p}$ is applied.

3. Flow of CHROMA signal

The Y-C-separated CHROMA signal is input to pin ⑥. Since pin ⑥ is connected a built-in capacitor for DC cutting, external signals can be directly connected to it without using a DC-cutting capacitor. The standard input signal level to pin ⑥ is CHROMA $0.3V_{p\text{-}p}$ (burst $0.127V_{p\text{-}p}$) for the color bar.

The CHROMA signal input to pin ⑥ flows through the ACC amp, and then, enters the PICTURE control circuit and the ACC detection circuit. The CHROMA signal entering the ACC detection circuit is burst-gated for burst peak detection. A peak detecting capacitor is connected across pin ⑤ and pin ⑧. Pin ⑧ gives bias to the DC amp circuit for the peak-detected signal of the burst, and a burst capacitor is connected across pin ⑧ and the ground.

The ACC detection capacitor is connected in bridge across pin ⑤ and pin ⑧ to minimize the CHROMA level fluctuation to be caused by the ripple in the IC power supply. If the IC power supply is free from ripple, the ACC detection capacitor may be connected across pin ⑤ and +B, and the capacitor for pin ⑧ may be eliminated.

The CHROMA signal entering the PICTURE control circuit is PICTURE-controlled, and HUE-controlled for entry to the COLOR control circuit.

For the PICTURE control, HUE control and the COLOR control, the burst section and the CHROMA section are separately controlled. That is, the PICTURE control circuit controls only the CHROMA section level, and the HUE ccontrol circuit only the bust pulse in the burst section. The COLOR control circuit level-controls only the CHROMA section. The killer circuit is connected to the COLOR control circuit, to brings the CHROMA section to the 0 level during the killer ON.

The COLOR controlled CHROMA signal is stripped of the

DC component by the built-in capacitor of the IC, and is sent to the killer detection circuit, APC detection circuit and to the demodulator.

While the previous IC used 3.58MHz VCO as the reference OSC. CX847 uses a VCO of 14.3MHz = 4 x fsc. It is counted down by an ECL type flip-flop within the IC to generate 3.58MHz CW. In this way, 3.58MHz Z-axis CW which intersects accurately parpendicular can be obtained, so that the demodulator axis is no longer required to be generated externally, and an accurate detection axis can be obtained.

In addition, in consideration of the future requirement of supplying clock to digital filters, an independent 14.3MHz signal is output from pin ⑩. A 0.7Vp-p 14.3MHz CW is output from pin ⑩ but at present this output need not be used.

The 14.3MHz VCO is connected to pins ⑪ and ⑬, with pin ⑪ outputting VCO and pin ⑬ inputting. VCO is controlled by the differential voltage at pins ⑮ and ⑯. These pins ⑮ and ⑯ are used as the common terminals also by the APC filter.

The counted down 3.58MHz CW is sent to the APC detection circuit, killer detection circuit and the demodulator. The killer detection circuit adopts the sync detection mode, and the killer output is connected to the COLOR control circuit. The killer time constant is connected across pin ㉚ and +B. The mutually perpendicular 3.58MHz CW and the CHROMA signal are input to the dimodulator, and are mixed with the output detected by mutually perpendicular two axes to output R-Y, B-Y and G-Y signals.

These COLOR difference outputs are brought to the R,G,B matrix circuit for mixing with the Y signal.

For burst flags, the delayed sync input to pin ㊱ is ANDed with the BLK input from pin ㉟ for supply to the respective blocks. Therefore, without the inputting of BLK, no burst flag is generated.

The delayed sync at pin ㊱ differentiates a 5Vp-p negative polarity sync, and supplies the results to pin ㊱. Pin ㊱ generates differential signals clamped at $-V_{BE}$, and is sliced at approximately 1.4V to change into a burst flag.

IX. DEFLECTOR SYSTEM PROCESSING CIRCUIT

The deflector system processing circuit consists of CX-20013A and its externally connected parts.
CX20013A internal composition is as shown in the block diagram in Fig. IX-1, consisting of a sync separator circuit, a 38f_H oscillator circuit, and AFC circuit, a horiz·counting down circuit, a vert·counting down circuit, a vert·deflection circuit amp, a horiz·predrive, a vert·blanking pulse and a constant voltage supply.

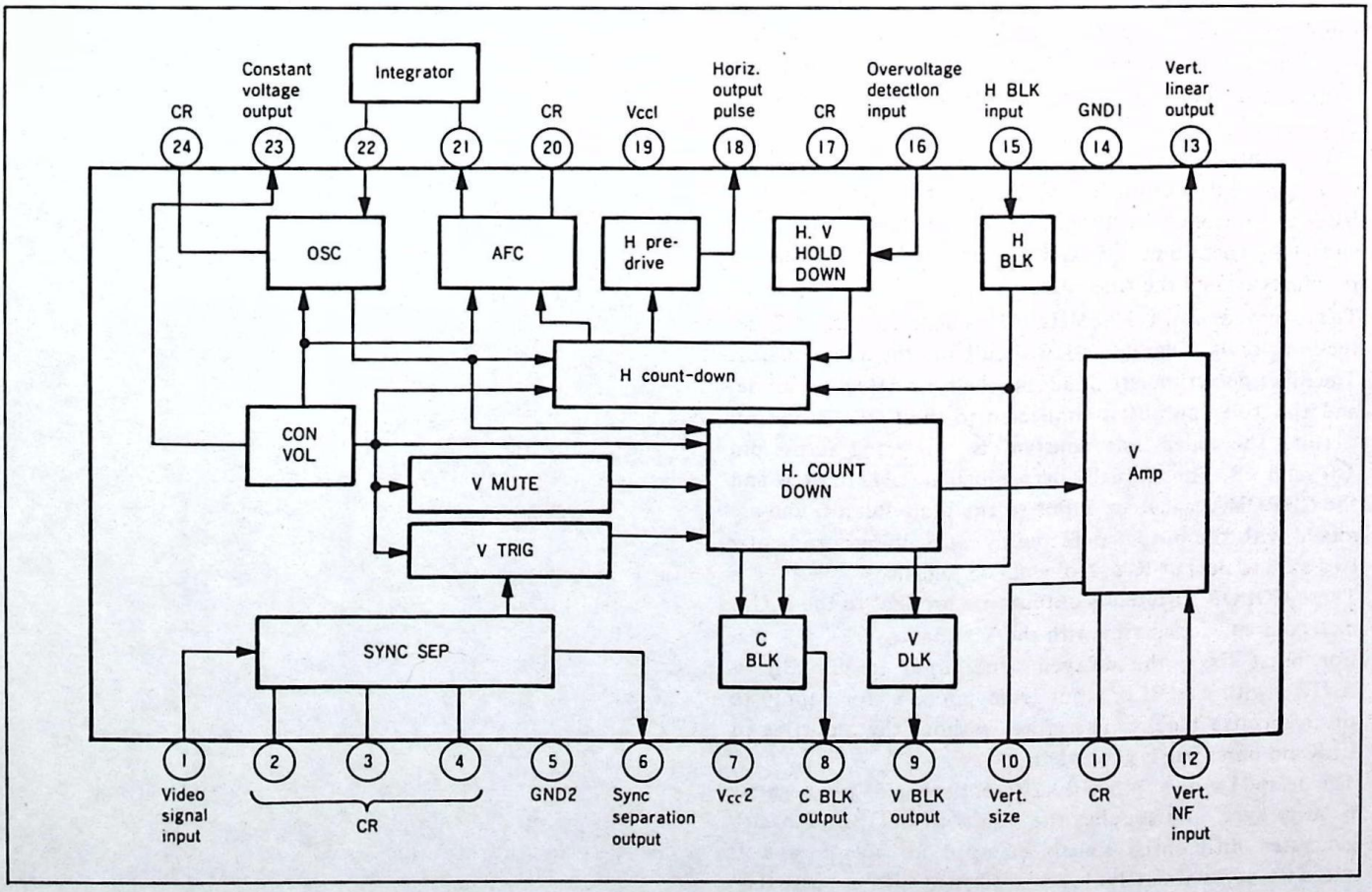

Fig. IX-1 CX20013A block diagram

1. Description of CX20013A operation

The circuit operation of CX20013A is explained block by block below.

1-1. Sync separator circuit

The video signal (2Vp-p) input from pin ① is clamped and amplified, and sync-separated by the horizontal and vertical sync-separation circuits. The sync output is output to pin ⑥, and simultaneously enters the AFC circuit, while the vertical output is input to the vertical count-down circuit via the vertical trigger pulse generation circuit inside the IC.

1-2. AFC circuit

The AFC circuit generates the reference trapezoidal wave by integrating the square wave that is generated with the horizontal blanking pulse made from the flyback pulse input to pin ⑮ as the reference. It is switched by the horizontal sync signal from the sync separation circuit to generate the VCO control signal.
The flyback pulses are driven by the horizontal pulse obtained from the VCO output by counting down, so that the VCO control signal composes horizontal PLL.

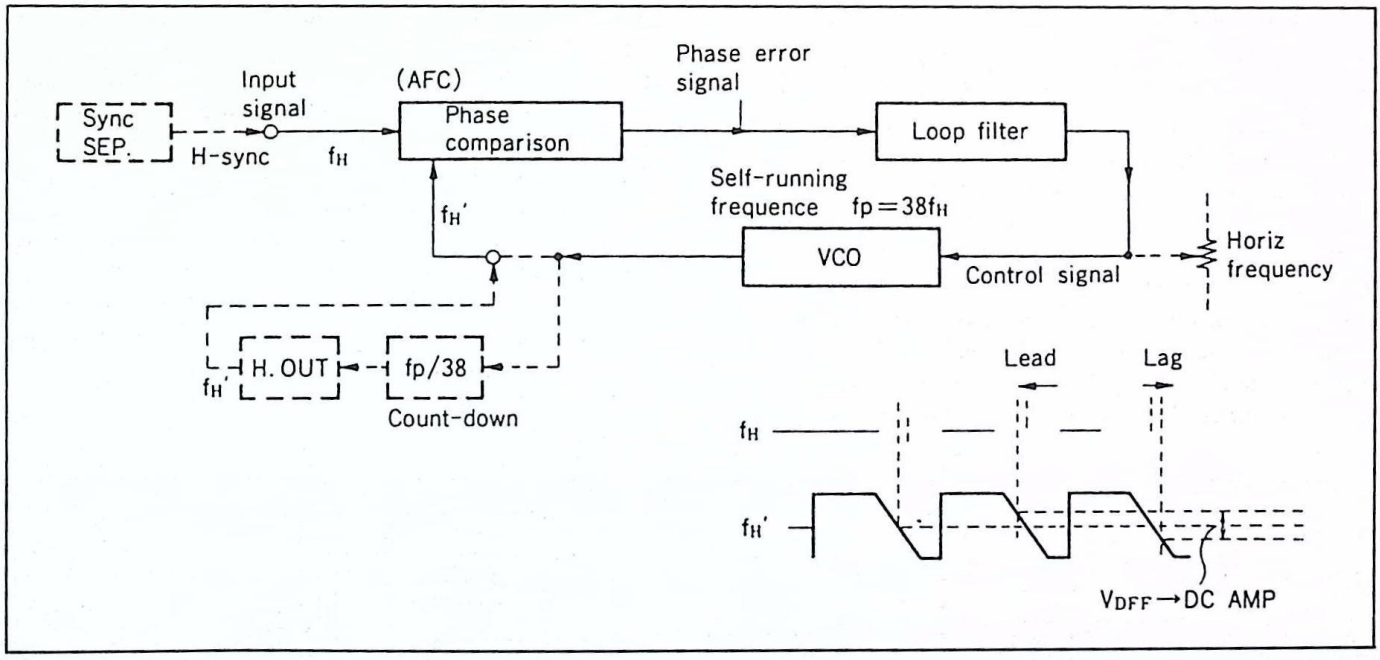

Fig. IX-2 VCO

1-3. VCO

Since the VCO oscillation frequency is $38f_H$ (= 597.9kHz), the 1/38 of this VCO output is f_H (= 15.734kHz).
When this is further divided by $1/225.5$, the oscillation frequency fv = 59.94Hz is obtained. The carrier fc for switching ve vertical deflection of 149.5kHz is obtained when $38f_H$ is divided by 5. VCO and AFC circuits are stabilized by a constant voltage circuit to avoid adverse influence of power supply fluctuation.

1-4. Horizontal count-down circuit

The horizontal pulses are generated from the VCO output pulses by counting down. Their width is controlled to a duty factor of approximately 45% which is convenient for horizontal driving. These pulses are output to pin (18) via the horizontal pre-drive circuit. Fig. 3 shows the horizontal counting down.

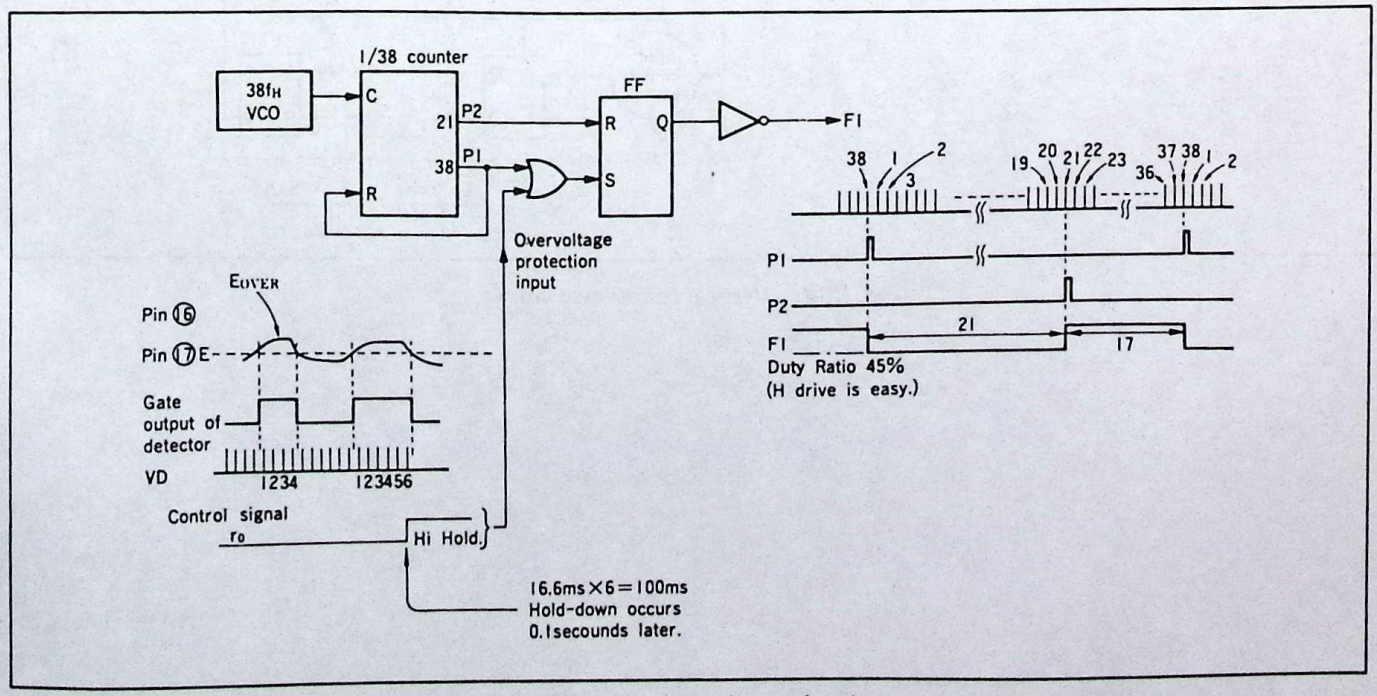

Fig. IX-3 Horizontal counting down

1-5. Vertical countdown circuit

The vertical countdown circuit comprises a 1st counter C_1 and a 2nd counter C_2 as shown in Fig. IX-4. The function of C_1 is to produce vertical pulses by frequency-dividing the clock pulse by 1/9975, but it also produces a gate-control pulse for the vertical sync input, delays the vertical pulse by 2.5H if dropped for some reason, and detects the sync signal for the VTR picture search, and widens the sync range of the countdown system.

The function of C_2 is to produce vertical drive pulses and blanking pulses for the vertical deflection circuit.

Normally input gate G_1 is open. When the vertical sync pulse has entered, the gate is closed by gate pulse P_1, but is opened again when counter C_1 advances by 8193 (about 13.7msec).

S_1 is controlled by vertical muting pulse P_3 and is normally on the "a" side. When the power is turned on, S_1 is switched to the "b" side by a pulse from P_3.

Therefore, C_1 becomes a free-running frequency divider for 1/10898, and the output is then 54.9Hz, which is about 5Hz lower than that of the normal state. Since P_3 continues for about 220msec in this state, the vertical deflection frequency remains shifted by 5Hz approximately. However the normal countdown operation is started when S_1 is switched to the "a" side after 220msec.

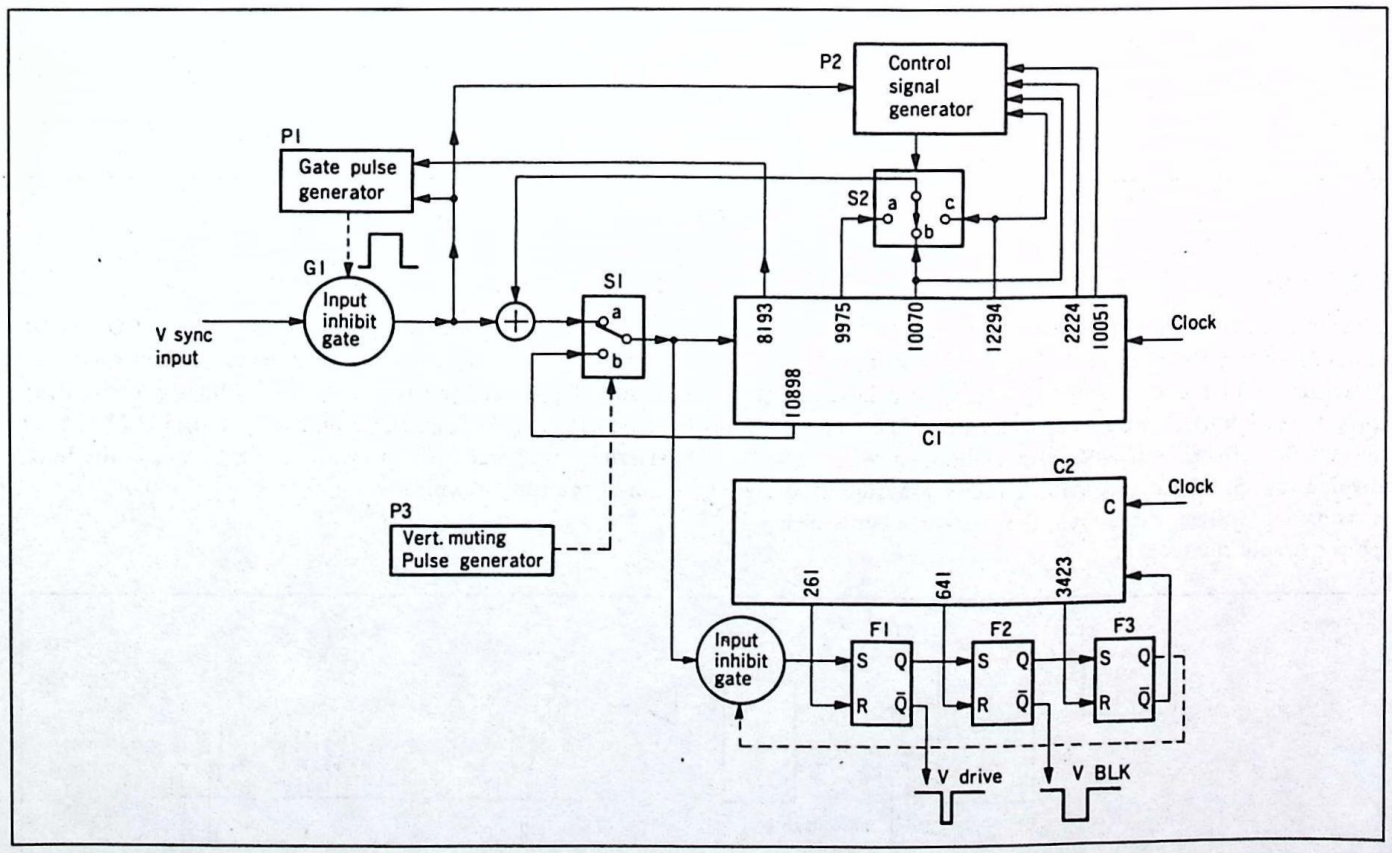

Fig. IX-4 Vertical countdown circuit

[Explanation of normal counting down mode]

The normal counting down mode is described in reference to Fig. IX-5.

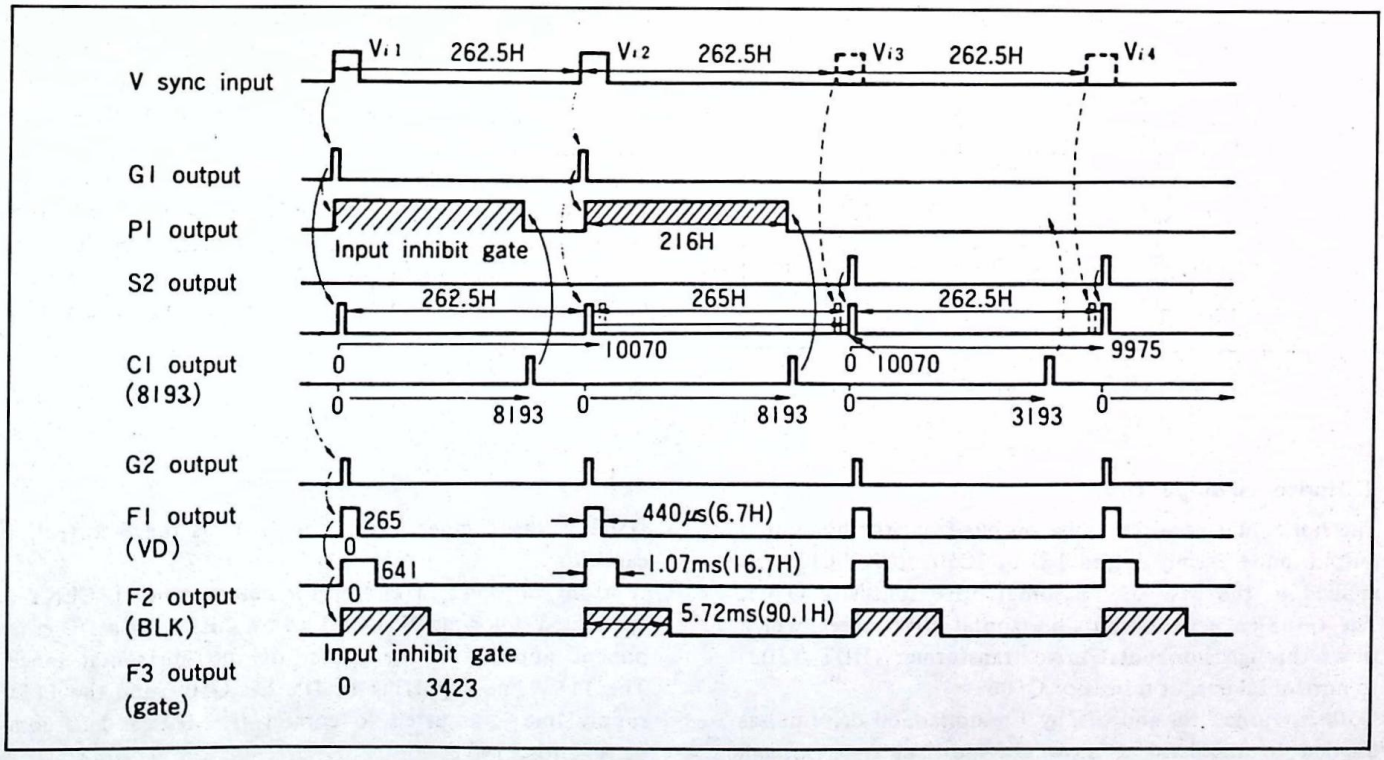

Fig. IX-5 Normal counting down mode.

When vertical sync Vi2 is input to G1, the leading edge of Vi2 is differentiated to output a pulse as shown in Fig. IX-5, and at the same time, the P1-output rises to disable the input of vertical sync.

This G1 output passes S1 and resets C1, as shown in Fig. IX-4. (When Vi2 pulse rises, the C1 output is reset to zero to start the counter.)

The C1 counting first generates the pulse for clearing the P1 input disable mode at 8193. When Vi2 is input to G1 next time, P1 has been cleared and also G1 is open, so that Vi2 is differentiated in the same way as Vi1, and passes A, S1 to reset C1. Therefore, when C1 counts 10070, it has been reset, so that S2 does not output any signal.

[When vertical sync is omitted]

If Vi3 is omitted when it should be input, C1 counts to 10070 because of the absence of the G1 output, and outputs a pulse through S2. This output resets C1 via (A), S1, and C1 starts to count from zero again.

This means that when Vi3 is omitted, an internal vertical signal is generated with a delay of 95 counts (2.5H) from the intended time.

In this case, while C1 counts from 0 – 10070, P2 detects the omission of Vi3, and generates a signal for switching S2 to the a side.

When also Vi4 is omitted, C1 outputs through S2 upon counting to 9975, because S2 is on the a side, and resets C1 itself. In this way, an internal vertical signal is generated at a delay of 2.5H from the intended Vi4. In this way, the internal vertical signals can maintain the normal vertical frequency.

The S1 output serves also as the G2 input. The G2 gate is normally open, and the G2 output sets F1 (VD), F1 output sets F2 (V-BLK), F2 output sets F3 (GATE), and F3 output controls G2. They are reset by the C2 output, and C2 is reset by the F3 output.

In this way, when a signal is input from S1 to G2, all subsequent input is disabled, and at the same time, C2 is reset to start counting down. The C2 output generates F1 (VD) and F2 (VBLK) at the 261st and 641st counts, and resets F3 at the 3423rd count. The F3 output resets C2 to clear the G2 input disable state to make it ready for next input. The 90.1H input disable period of F3 secures the minimum interval for the vertical BLK signal to assure sending and receiving of user-countrol signals.

1-6. Vertical Amp

This block is composed of a reference saw tooth wave generating circuit and a comparator amp, as shown in the block diagram in Fig. IX-6.

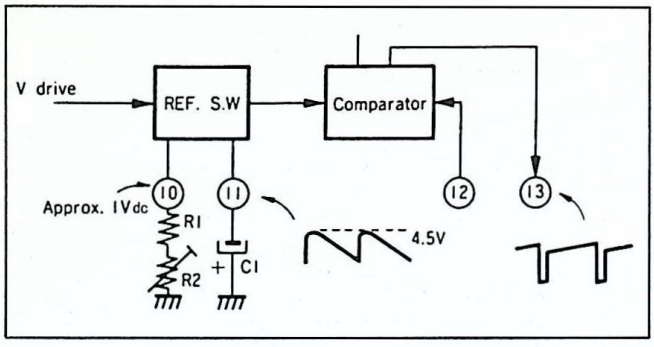

Fig. IX-6 Vertical amp

The saw-tooth wave with good liniarity generated by the reference saw-tooth wave generator circuit is used as the reference for vertical deflection current.

A good linearity of this saw-tooth wave is obtained by the process of charging up the capacitor C1 to the internal reference voltage (approx. 4.6V) by the vertical drive pulse, and then discharging in the constant current determined by R1 and R2, that is, $I = 1V/R1+R2 \fallingdotseq 15V/15k\Omega \fallingdotseq 67\mu A$ at a voltage of approx. 1V.

The comparator amp is of the differential composition, and compares the reference saw-tooth wave with the S-corrected actual vertical deflection current, amplifies the difference to output to pin ⑬. This comparator amp is limited to 30kHz (-3dB) to eliminate unnecessary high frequency band.

2. Horizontal output circuit

The horizontal pre-drive pulse output from the horizontal output pulse terminal (pin ⑱) of IC501 (CX20013A) is applied to the base of horizontal drive transistor Q505. The Q505 collector outputs horizontal drive pulses, which flows through horizontal drive transformer (HDT T503) to horizontal output transistor Q506.

Q506 is turned on and off by the horizontal drive pulses applied to the base to flow saw-tooth current through the deflector yoke and generates approximately 900Vp-p FLYBACK pulse at the collector.

C532 is a resonence capacitor, and resonates with DY and other inductances.

D508 is the damper diode, and C542 is the S-correction capacitor.

In front of C542, a circuit for determining H. CENT is connected, allowing H. CENT to be shifted by a DC component applied to the center of the horizontal range. The 115V line supplying to DY has Q509, and the 115V supply line is adjusted to correct H. SIZE and to compensate for PIN.

Q511, T504 and Q512 are identical to Q505, T502 and Q506 in function, but has the FBT instead of DY. Q512 incorporates a damper diode.

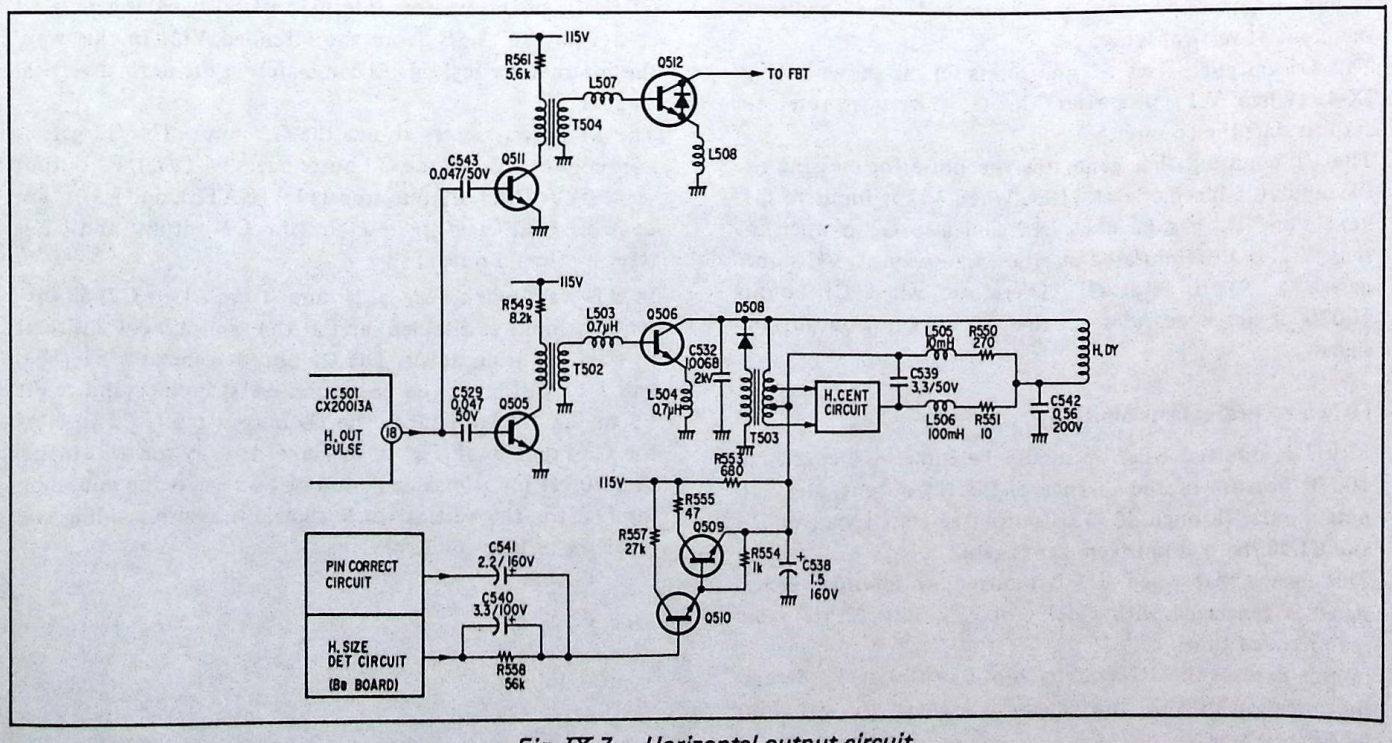

Fig. IX-7 Horizontal output circuit

3. Vertical output circuit

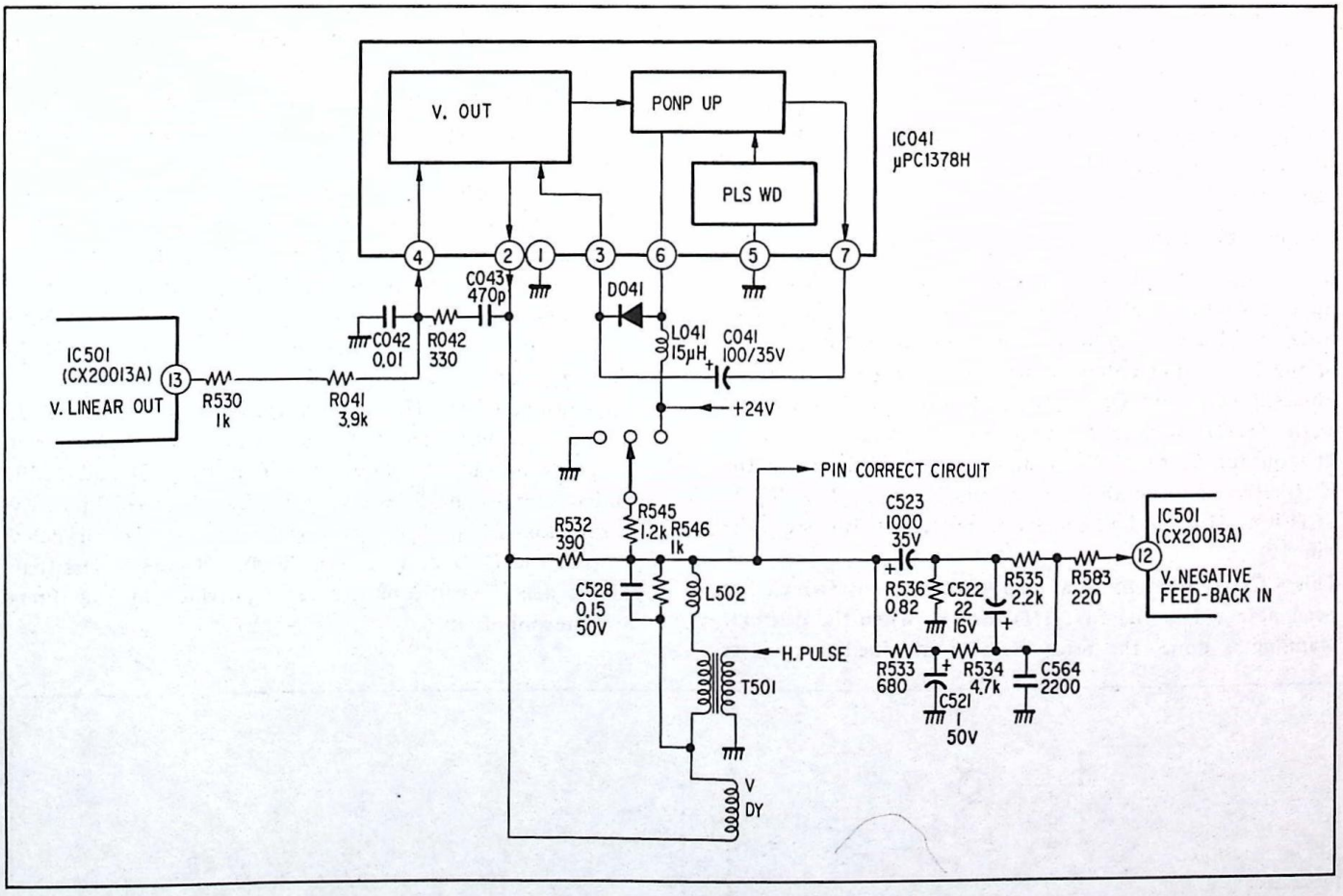

Fig. IX-8 Vertical output circuit

The vertical drive voltage output from the vertical linear output terminal (pin (13)) of IC501 (CX20013A) is input to pin (4) of IC041 (μPC1378H) via R530 and R041, and output from pin (2) after amplification. This output is applied to V. DY, the deflector current flows to R536 via C523, and voltage proportional to the deflector current appears across R536. This voltage is AC-fed-back to the vertical negative feedback input terminal (pin (12)) of IC501. IC041 incorporates a boost circuit, which approximately doubles the supply voltage of the output circuit only during the vertical deflection FLYBACK time. For this, the voltage stored during the scanning in capacitor C041 connected across pin (3) and pin (7) is superposed on the supply voltage. In this way, the FLYBACK time can be shortened, and the power loss during normal time is reduced. D041 serves to prevent the boost voltage from flowing back to the power supply line.

X. LINEARITY CORRECTION CIRCUIT

Fig. X-1 shows a block diagram of a linearity correction circuit. The linearity correction circuit delays the error voltage which appeared from the pin (14) of the PLL (IC801) for 1H at the CCD of the IC101, and corrects the linearity by sending the corrected signal to the SUB-DY during the next 1H. The function of each block is described below.

1. Linearity Correction Loop

Any frequency which does not coincide with the basic frequency (8.4MHz) is converted to a voltage (an error voltage). This error voltage comes out from pin (14) pin of the IC801 and enters to the LPF (low pass filter)- (1) through the buffer Q821. The LPF attenuates the leakage carrier (8.4MHz) contained in the error voltage.

The output of the LPF is input to the CCD (1) in the IC101 through the amplifier of the IC102-2. This IC101 CCD is a 1H delay line and its output comes out from the pin (12) .

This CCD is used to delay the error element (which has been detected in the first 1H) for 1H. When the next 1H scanning is done, the error element obtained in the last 1H is used for the correction. That is, the 1H delay line CCD is used as a memory element which memorizes the error element for 1H. In the first 1H scanning there is no correction at all. At the time only data is memorized. In the next 1H scanning a correction is made using the memorized data and, at the same time, the result of the scanning is memorized as a data. This operation is repeated over and over.

The output from the pin (12) in the IC101 is input to the LPF-(2) through the buffer Q106. This LPF-(2) is used to attenuate the clock element of the CCD (IC101) output signals. The output of the LPF-(2) enters to the HPE (high pass filter)- (1) formed by the IC103-1. This HPF is used to prevent the low-band oscillation in the whole linearity correction circuit.

The output of the HPF- (1) is amplified in the IC103-2. Then, it is buffered with the +12V and −12V power supplyes in order to operate the DY in the Q108 and Q109, and is sent to the SUB-DY. This flow is called Linearity Correction Loop. This loop generates just 1H of delay so that the CCD delay line is designed to create less than 1H of delay because of the delay provided by the filters and the amplifiers.

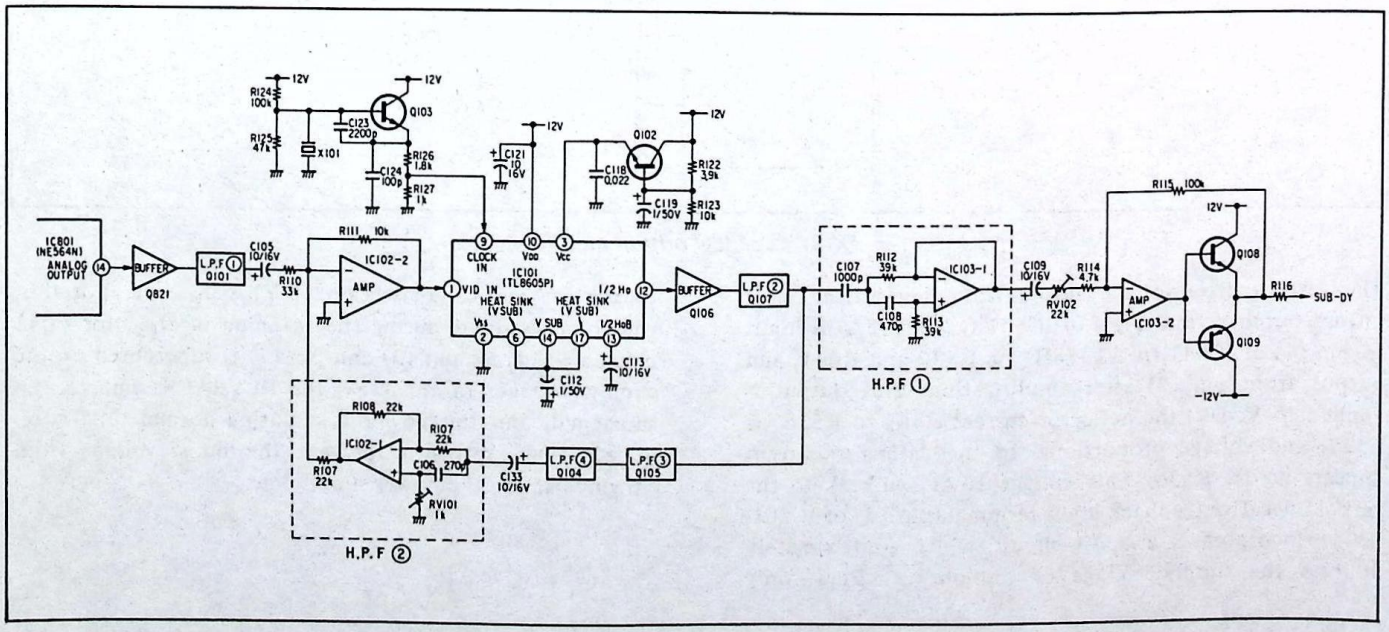

Fig. X-1 Block Diagram of a Linearity Correction Circuit

2. Memory Loop

If only the correction loop is used then the correction will be made for every other 1H line. The reason is described blow. Assume that every line generates almost the same amount of error element. The first line is scanned without any correction but the error element of the first line is used to correct the second line. So, there will be no error element generation in the second line because the second line has been corrected. The third line is corrected by the error element of the second line, however, the third line will not be corrected because there is no error element generation in the second line. The fourth line will be corrected since the third line, which has not been corrected, will generate an error element.

Thus, if only the correction loop is used then every other line is corrected. Because of the above reason, once a correction is made it (corrected quantity) should be memorized. The memory loop functions as to memorize it (corrected quantity).

The flow of the memory loop is described below. A part of output of the LPF-② in the correction loop is input to the LPF-③ and ④, then it enters to the HPE ② formed by the IC102-1. The output of the HPF-② is added to the input for the IC102-2 amplifier of the correction loop, thus, the corrected quantity so far is added to the next corrected quantity.

Like the correction loop, this memory loop has to create 1H of delay as a whole. Each filter in the memory loop is mainly used to create 1H of delay in the memory loop. The RV101 in the IC102-1 performs a precise adjustment for the delay.

XI. MOTOR DRIVE CIRCUIT (LENS FOCUS)

The motor drive circuit diagram is shown in the Fig. XI-1.

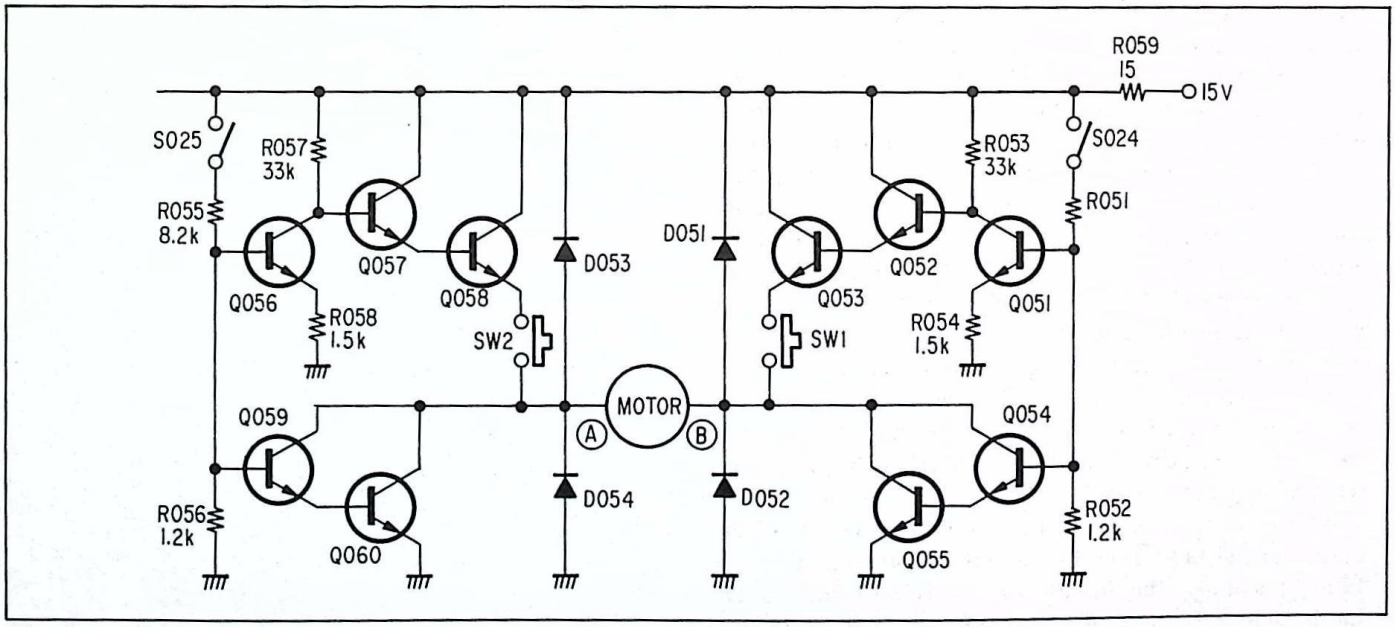

Fig. XI-1 Motor drive circuit

The motor drive circuit is explained below.

If the S025 switch is turned ON, then Q056 turns ON and Q057 as well as Q058 turn OFF. Also, Q059 and Q060 turn ON. That is, the power to the point Ⓐ of the motor is cut at the Q058. On the contrary, it is grounded at the Q060. On the other hand, the S024 switch is OFF so that the Q051, Q054, and Q055 are OFF and the Q052 as well as Q053 are ON. Power is supplied to the point Ⓑ of the motor through the Q053. The motor rotates since the point Ⓑ becomes a power supply and the point Ⓐ is grounded. If the S024 and the S025 are both OFF, then the motor does not rotate because Ⓐ and Ⓑ points are both the power supply.

SW1 is a limiter switch. If this switch is pushed then the power to the motor is cut and the motor stops.

If the S024 switch is turned ON, then, like the same process. point Ⓐ becomes a power supply and point Ⓑ is grounded so that the motor rotates in the opposite direction.

SW2 is a limiter switch of the opposite direction.

If both the S024 and S025 switches are turned ON, then both powers are cut, Ⓐ and Ⓑ points are grounded, and the motor does not rotate. R051, R052, R055, R056, and R059 compose a current limiter. When the power to the motor is too large and the motor is over-loaded, the base voltage of the Q054 or the Q059 falls to limit the current to the motor. D051, D052, D053, and D054 are used to escape the back electromotive force which occurs when the motor stops.

XII. HIGH-TENSION CONTROL CIRCUIT

Fig. XII-1 shows a high-tension control circuit diagram.

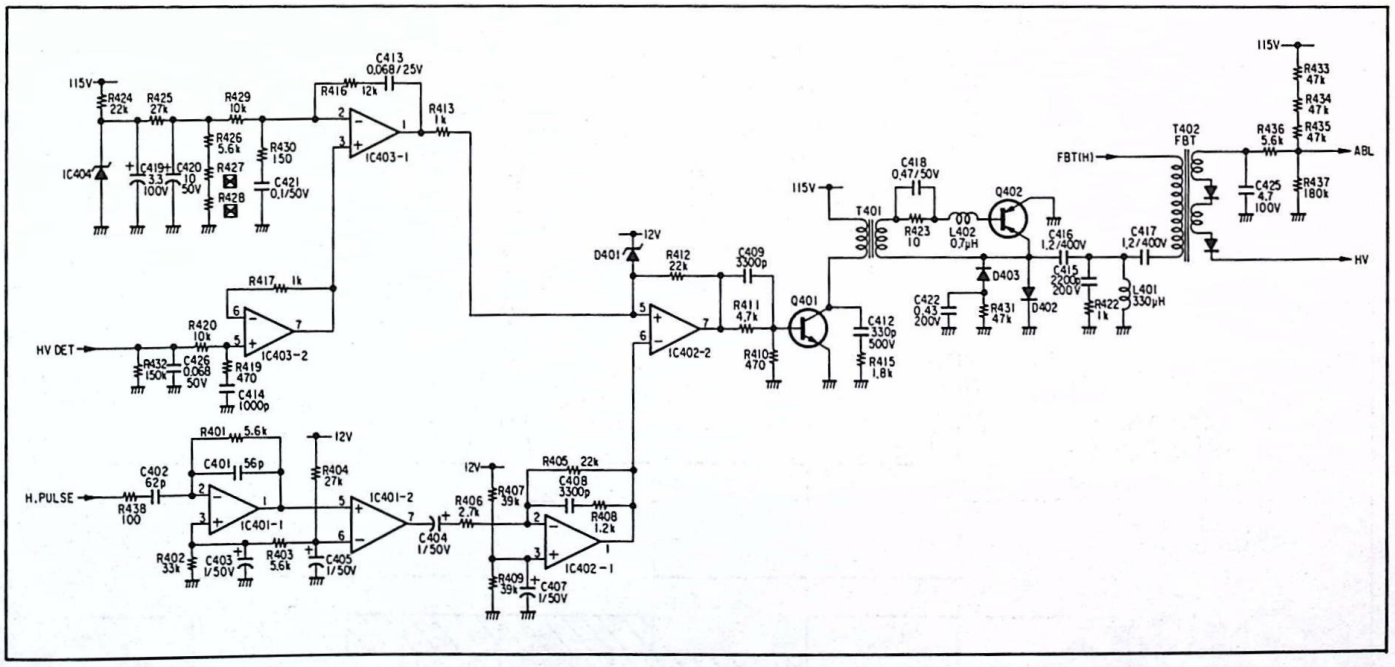

Fig. XII-1 High-Tension Control Circuit

If the Q402 is completely in the ON state, then the L401 and the C416 are connected in parallel and the current flows into the C416 which has a low impedance. As a result, serial capacitence of the C416 and C417 enters to the FBT as a S-capacitor so that the converter pulse is applied to it. (HV rises) If the Q402 is completely in the OFF state, then the C417 and L401 enter to the FBT in serial order so that the converter pulse is devided by the primary inductance of the FBT and the L401, and the input pulse level of the FBT falls. (HV falls)

High-tension is controled by shortening or lengthening the ON time of the Q402 (GCS). The high-tension control circuit generates the pulse which turns the Q402 ON.

1. High-Tension Unit

If there is no control circuit in the high-tension unit, then the FBT, C417, and L401 are only connected in serial order and the current through the L401 shows its wave form as the dot line (Ie) in the figure XII-2. However, while the Q402 (GCS) in the control circuit is ON, a part of energy obtained from the L401 (the triangular part ①) enclosed by the dot line and the solid line of the Ie in the Fig. XII-2 is supplied from the C416 side. Also, if the Q402 (GCS) is turned OFF by its reaction, the energy supplied from the C416 (②) flows into the C416 side. As the result, the current through the L401 becomes the Ie of the Fig. XII-2 where the pulse width of the voltage drop is widened and its height is lowered. The voltage for the FBT is decreased by the amount of the voltage for the L401 (that is, the height of the pulse described above) even if the converter out is constant. Thus, the voltage for the FBT can be controled.

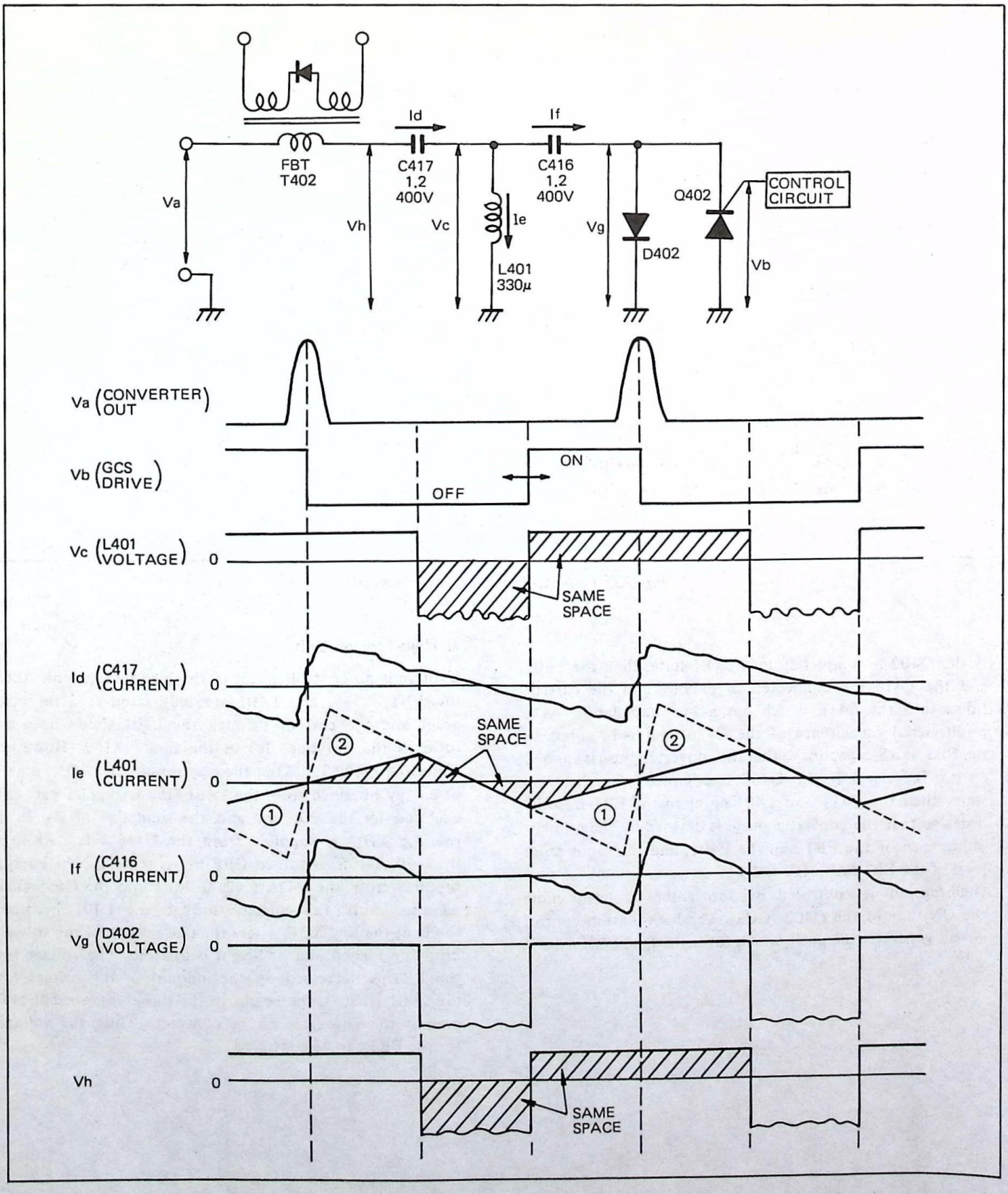

Fig. XII-2

The voltage for the L401 depends on the pulse width which is dependent on the ON time of the Q402 (GCS).

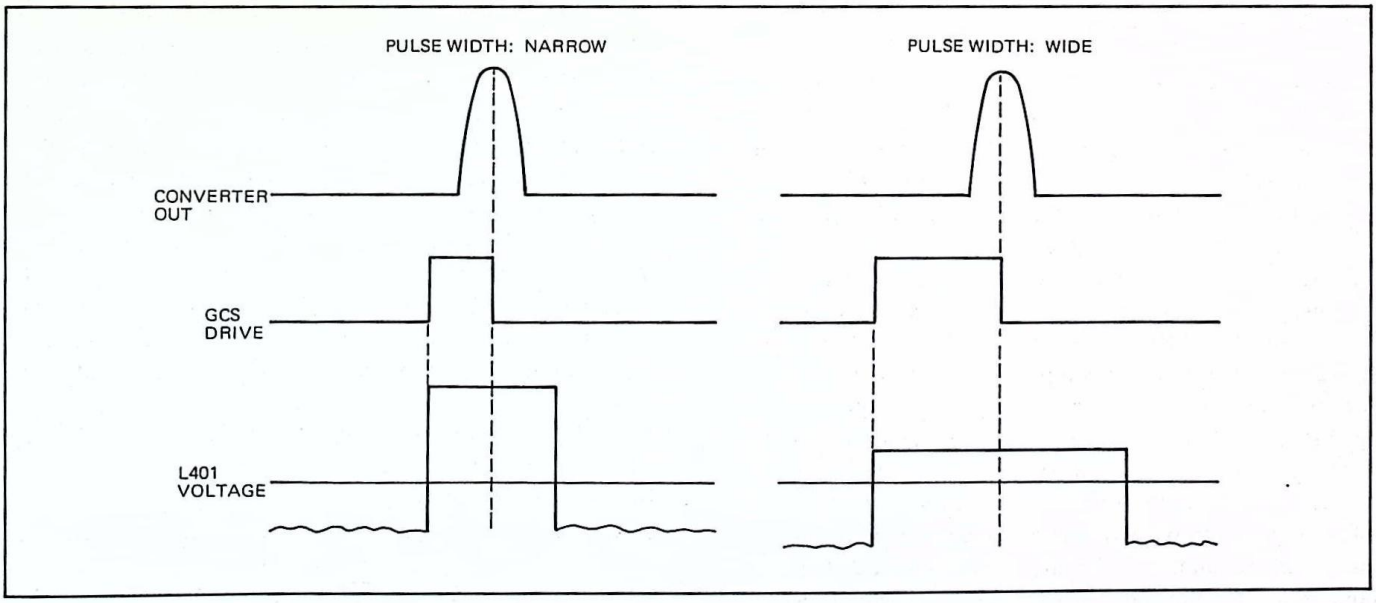

Fig. XII-3

2. Control Unit

Fig. XII-4, 2 shows the H pulse (came out from the H-OUT of the D board) which is differentiated by the IC401-1, where the fall and the rise of the H pulse is detected. At this time 6V of bias is applied to the pin ③. Next, only the rise of the H pulse is taken out by the IC401-2 comparator. 7V is applied to the pin ⑥ of the IC401-2 and if, in the case of more than 7V, then "H" is generated (Fig. XII-4, ③).

In the IC402-1 integration circuit, the output pulse of the IC402-2 is integrated and the saw-tooth waveform is created. This is input to the pin ⑥ of the IC402-2 in the Fig. XII-4, ④.

On the other hand, high voltage is devided (HV. DET) and it is buffered in the IC403-2. The result is input to the pin ③ of the IC403-1. The IC403-1 is a difference amplifier. It compares the input to the pin ③ with a constant voltage, checks the difference, and sends a proportional output to the pin ①.

The IC402-2 compares the sawtooth wave for the pin ⑥ with the DC voltage for the pin ⑤ and outputs the pulse shown in the Fig. XII-4, ⑤. When the high voltage changes the DC voltage, input to the pin ⑤ changes and the pulse width of the pin ⑦ output also changes. When the high voltage rises, "L" pulse width becomes narrow. When the high voltage falls, "L" pulse width becomes wide. By changing this pulse width, ON time of the Q401 is changed and ON time of the Q402 (GCS) is changed. High-Tension (voltage) control is done by changing the ON time of the GCS, controling the pulse height of the cool side of primary winding in the FBT, and changing the pulse voltage input for the FBT equivalently. This high-voltage control is not done in the converter side (D board Q512). (Converter pulse height is almost constant.)

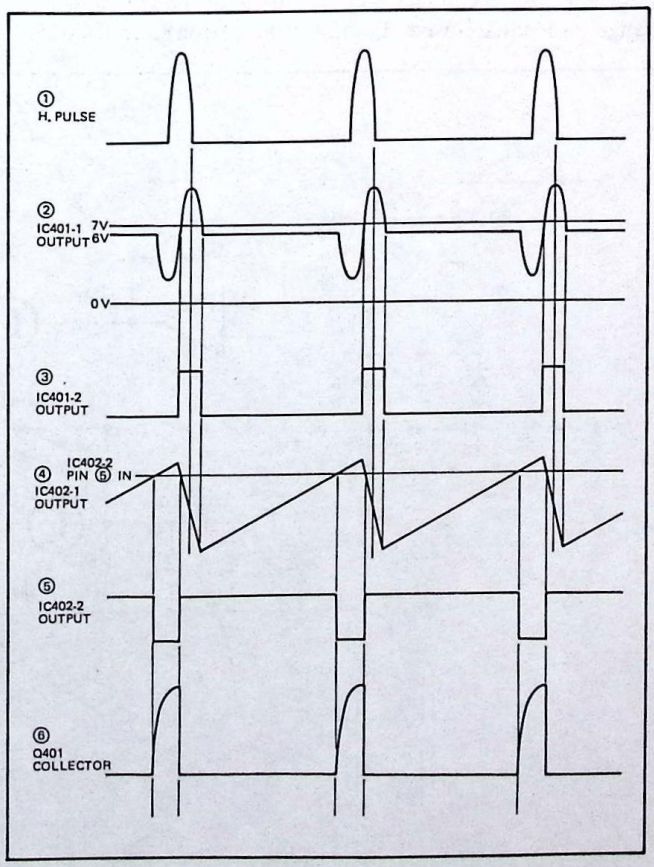

Fig. XII-4

XIII. DYNAMIC FOCUS CIRCUIT

Fig. XIII-1 shows the dynamic focus circuit diagram and the voltage waveform of each unit.

The dynamic focus circuit is used to obtain a clear focus around a screen (up, down, right, and left of the screen). This inputs a parabolic waveform (H and V) to the DF terminal of the high voltage block.

Each part of the circuit diagram is explained below. V-parabolic waveform which appeared from the D board and the sawtooth waveform are sent to the IC051. In the IC051 the parabolic waveform is compensated (corrected) by the sawtooth waveform and in the RV052 phase adjustment is applied to the compensated waveform. Thus, smoothly the V-shaped parabolic waveform is created and sent to the pin ⑥. This parabolic waveform is buffered in the Q061 and then it is input to the T051. V-parabolic waveform, which will be input to the high voltage block, requires about 500V of amplitude. To generate V-parabolic waveform in the secondary side of the T051, V-parabolic wave, having been AM–modulated, is input to the T051 using the H pulse as a carrier. The DF pulse is a H pulse which appears at the secondary side of the H-OUT. This pulse is changed to square-wave by the R067, R068, and C056.

A circuit like a H-OUT is formed by the Q062 and Q063. AM modulation is done by sending the V-parabolic waveform to the Q063 power source point. Thus, if V-parabolic waveform is output using the H-puls as a carrier then the frequency becomes high, the transmission to the secondary side becomes easier, and large output can be obtained with a small transformer. At the secondary side of the T051, rectification is made by the D057 and C058 and only the V-parabolic waveform is taken out, which in turn, will be input to the T052 (DFT). DF-pulse is input to the primary side of the T052 and H-parabolic waveform is obtained by double-integrating it with the L051, T052, C059, and C060.

H-parabolic waveform and V-parabolic waveform are added in the T052 and it is sent to the DF terminal of the high voltage block.

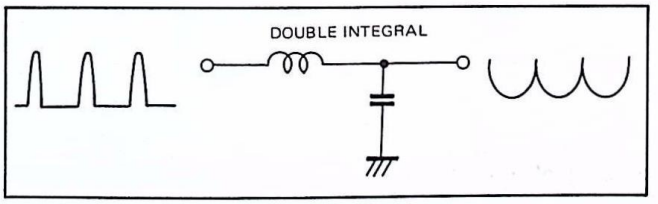

Fig. XIII-2

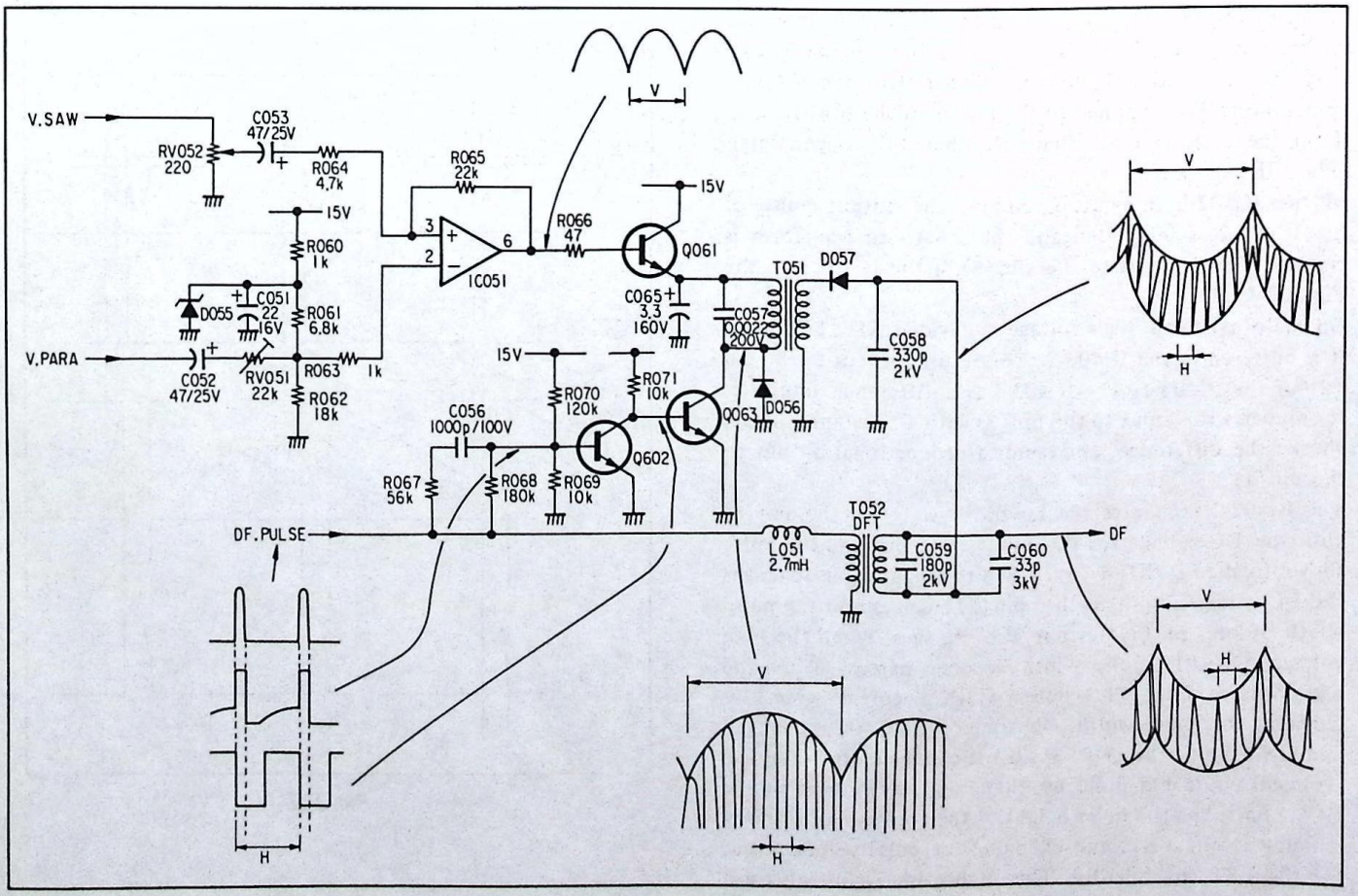

Fig. XIII-1 Dynamic Focus

XIV. POWER SUPPLY CIRCUIT (Y-Z power supply)

Fig. XIV-1 shows the Power Supply Circuit Diagram.

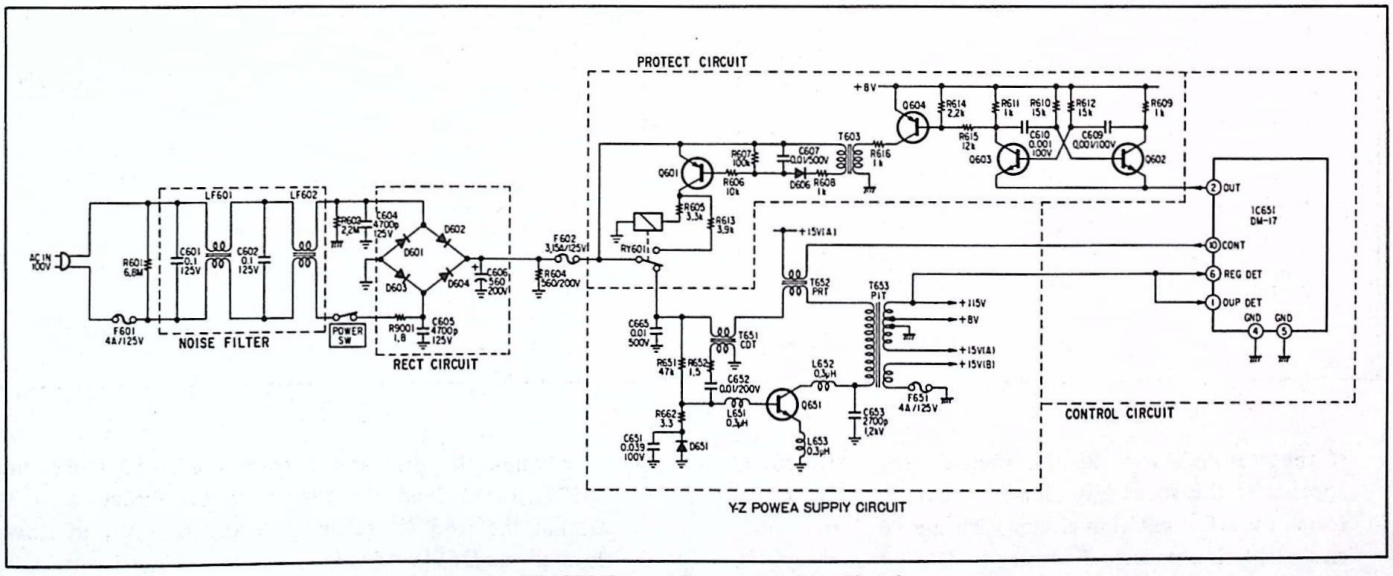

Fig. XIV-1 Power Supply Circuit

1. Noise filter

By using 2 line filter transformers (LF601, LF602) the level of the high-frequency noise in the power supply line can be reduced.

When the filters are seen from the set side, the low pass filter of the L C is formed by the LF602 and C602, plus, LF601 and C601. The noise generated in the set are prevented from escaping. C601 and C602 are accross capacitors.

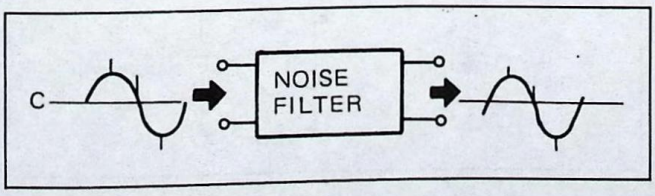

Fig. XIV-2

2. Converter Circuit

AC (alternating current) output from the noise filter is full-wave rectified in the D601, D602, D603, and D604 and is smoothened in the C606.

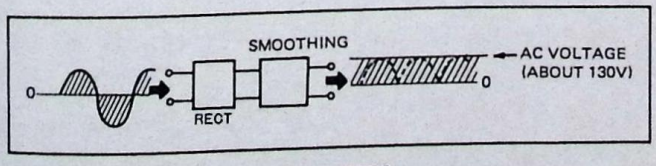

Fig. XIV-3

The reistor R604 at the right side of the C606 is used for the discharge of the C606 when the power is cut.

3. Y-Z Power Supply Circuit

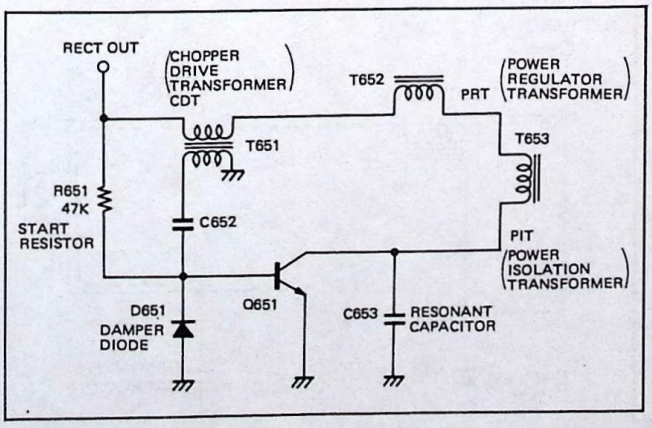

Fig. XIV-4 Y-Z Power Supply Circuit

Y-Z power supply operates as follows.

1) When POWER SW turns ON and the rectified out is output, voltage is applied to the Q651 base through the R651 and Q651 turns ON. When Q651 turns ON, the rectified out passes through the T651, T652, and T653 and the current flows from the collector of the Q651 tp the emitter.

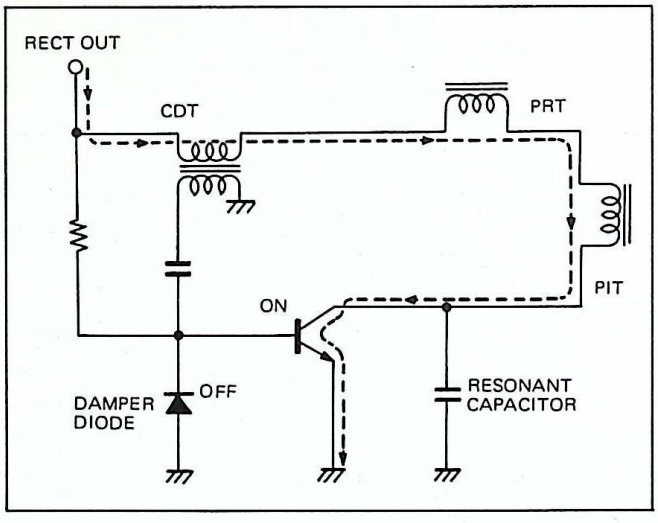

Fig. XIV-5

If the current flows like this then electromotive force appears at the secondray side of the T651. This force forms the L C oscillation circuit with the T651 and C652 and oscillation occurs. By using it, Q651 is turned ON/ OFF.

2) Next, the Q651 is turned OFF by the oscillation circuit formed with the T651 and C652. However, the T653 sends the current to the same direction of 1) so that the C653 is charged.

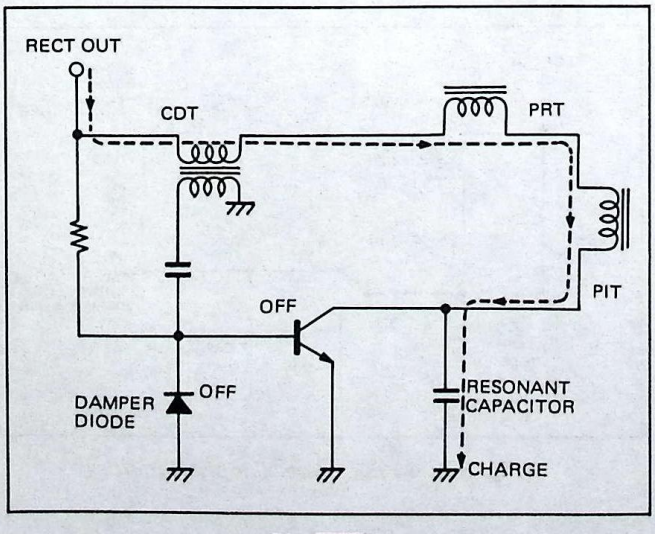

Fig. XIV-6

3) When the charge of the C653 comes to a certain point the current flow stops and it starts cischarging.

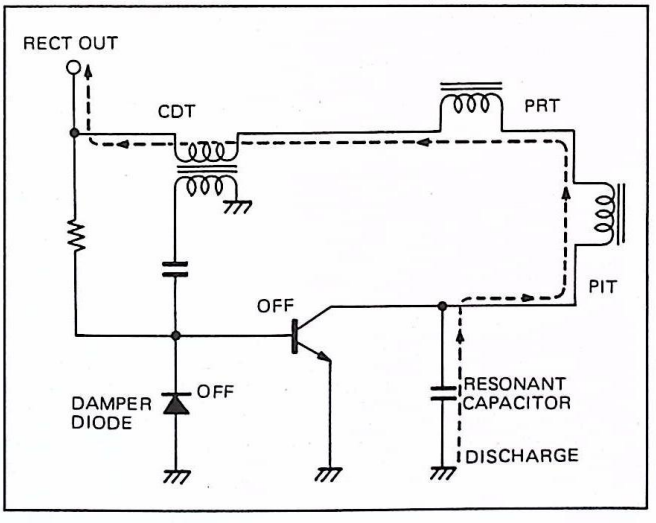

Fig. XIV-7

4) Even when the discharging from the C653 stops, the T653 tries to send the current to the direction of 3) so that the D651 is turned ON and the current flows through the D651 and Q651.

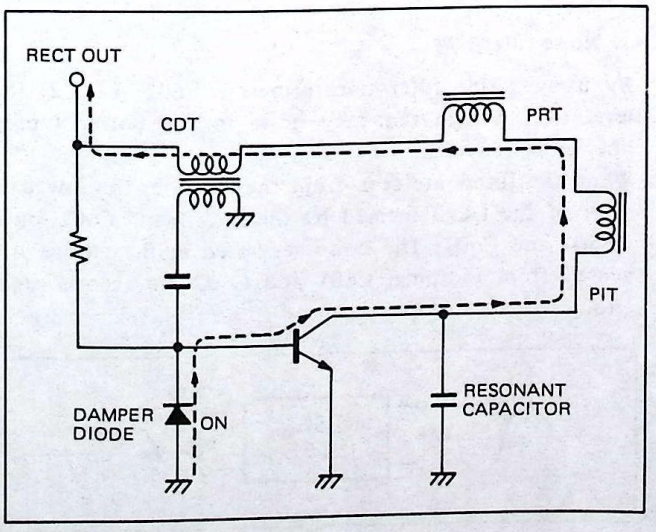

Fig. XIV-8

5) When the recersed current flow ends, a current flows through the Q651 as the case of 1) and 2) – 4) are repeated. The current waveform through the T651 is shown below.

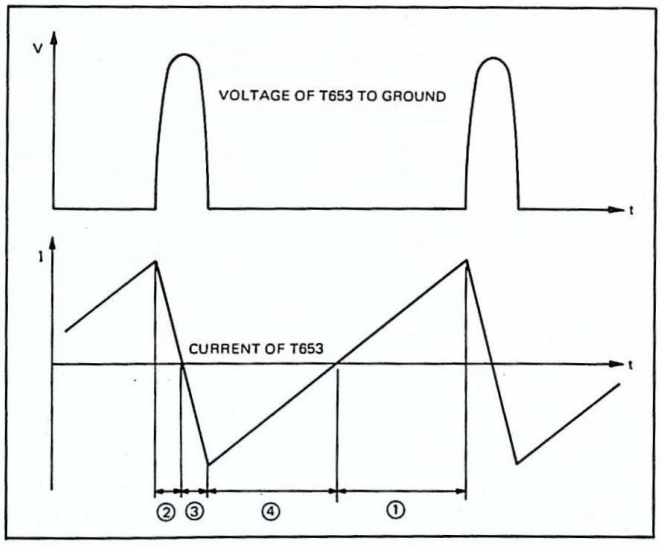

Fig. XIV-9

4. Control Circuit

The IC651 functions as a control circuit where +115V output from the secondary side of the T653 is input to it. The IC651 outputs to the T652 to compensate its rate of fluctuation. By changing the current at the primary side of the T652, the current through the secondary side can be controled, in turn, the T653 is controled because the current is used in the T653.

5. Protection Circuit

When the +115V input becomes 120V – 125V in the IC651, the OVP output terminal (pin ②) becomes 0V. (pin ② is an open collecter output). If the pin ② becomes 0V then the multi-vibrator formed with the Q602 and Q603 starts oscillating. The output is sent to the T603 through the buffer Q604. At the secondary side of the T603, the output is rectified by the C607 and D608 and the Q601 is turned ON. When the Q601 is turned ON the realy RY601 operates to cut off the rectified out from the Y-Z power supply. Thereafter, the relay keeps the state by using the rectified out and keeps the power supply OFF until the POWER SW is turned ON again.

SECTION 7
VIDEO OPERATION
(Video : FP-60)

TABLE OF CONTENS

Section	*Title*	*Page*
7-1.	**VIDEO CIRCUITS**	7-1
1-1.	RECORDING CIRCUITS	7-7
1-1-1.	COMB Filters 1 and 2	7-7
1-2.	PLAYBACK CIRCUITS	7-11
1-2-1.	COMB Filter 1	7-11
1-2-2.	Automatic Frequency Drift Rejector (AFDR)	7-13
1-2-3.	Video DCC Circuit	7-13
1-2-4.	Playback Under Varying Speed (JOG)	7-14
7-2.	**SYSTEM CONTROL**	7-15
2-1.	GENERAL	7-15
2-2.	FUNCTIONS OF CPU1 (IC1 on the FD-3 Board)	7-20
2-3.	FUNCTION OF CPU2 (IC2 on the FD-3 Board)	7-23
2-4.	POWER SUPPLY SECTION	7-25
2-5.	SOLENOID DRIVE CIRCUITS	7-26
2-5-1.	Pinch Sotenoid Driver	7-26
2-5-2.	Brake Solenoid Driver	7-26
2-6.	THREADING/UNTHREADING CONTROL	7-27
2-7.	SENSOR CIRCUITS	7-28
2-7-1.	End Sensors and Sense Control Circuit	7-28
2-7-2.	Dew Sensor and Heater	7-29
2-7-3.	Power Failure Detecting Circuit	7-30
2-8.	OTHER CIRCUITS	7-31
2-8-1.	Clock Generator and its Control	7-31
2-8-2.	Buzzer Circuit	7-31

Section	Title	Page
2-8-3.	Initial Reset Circuit	7-32
2-8-4.	Liquid Crystal Display Panel (LCD-1)	7-33
2-8-5.	Insert Function	7-33
7-3.	**SERVO CIRCUITS**	7-35
3-2.	Capstan/Drum Servo Circuits	7-39
3-2-1.	Drum Servo Circuit	7-39
3-2-2.	Capstan Servo Circuit	7-39
3-2-3.	Servo Control During C/R	7-39
3-2-4.	CTL and Tracking control	7-39
3-2-5.	IC1 (MB3759PF) of SD-1	7-40
3-2-6.	Timing Diagrams	7-40
3-2-7.	TC4030BF	7-43
3-2-8.	Timing Diagram of PG-A, PG-B and PG-S	7-43
3-2-9.	Timing Diagram of the FG Circuit	7-43
3-2-10.	Timing Diagrams of the SP-1 Board's CTL Circuit and CTL-RF SW P	7-44
3-3.	OPERATIONS OF PAUSE, MAKING PICTURES CONTINUOUS, REC REVIEW AND INSERT	7-44
3-3-1.	Operation of PB Pause → Release of Pause (See Fig. 3-13.)	7-44
3-3-2.	Making Pictures Continuous (REC PAUSE → Release from (PAUSE)	7-45
3-3-3.	REC Review	7-46
3-3-4.	Insert	7-46
3-4.	RELL SERVO CIRCUITS	7-47
3-4-1.	Reel Motors	7-49

Section	Title	Page
7-4.	**AUDIO CIRCUITS**	7-51
4-1.	RECORDING CIRCUITS	7-53
4-2.	PLAYBACK CIRCUITS	7-54
4-3.	RECORDING/PLAY BACK SWITCHING CIRCUIT	7-55
4-4.	BIAS/ERASING CURRENT GENERATORS	7-56
7-5.	**MECHANICAL SECTION OPERATIONS**	7-57
5-1.	Cassette Loading	7-57
5-2.	Threading	7-58
5-3.	TAPE PATH	7-60
5-4.	PLAY	7-62
5-5.	FAST FORWARD	7-64
5-6.	REWIND	7-66
5-7.	PICTURE SEARCH	7-68
5-7-1.	Forward Picture Search (CUE) and Forward FR Picture Search	7-68
5-7-2.	Reverse Picture Search (REVIEW) and Reverse FR Picture Search	7-69
5-8.	PAUSE	7-70
5-9.	RECORDING	7-71
5-10.	EJECT	7-73
5-11.	FUNCTION KEY (MODE) MATRIX	7-75
7-6.	**OTHERS**	7-76
6-1.	REMOTE CONTROL CIRCUIT	7-76
6-2.	PINCH PLUNGER EMERGENCY RELEASE CIRCUIT	7-77
6-3.	BUZZER OSCILLATION CIRCUIT	7-77

7-1. VIDEO CIRCUITS

The video circuits are mounted on the boards named MC-1, CM-4, DE-2; JG-1, PE-3, RP-11, VB-1, YF-1, YM-1, and YS-1. Fig. 1-1 is a block diagram of the video circuits.

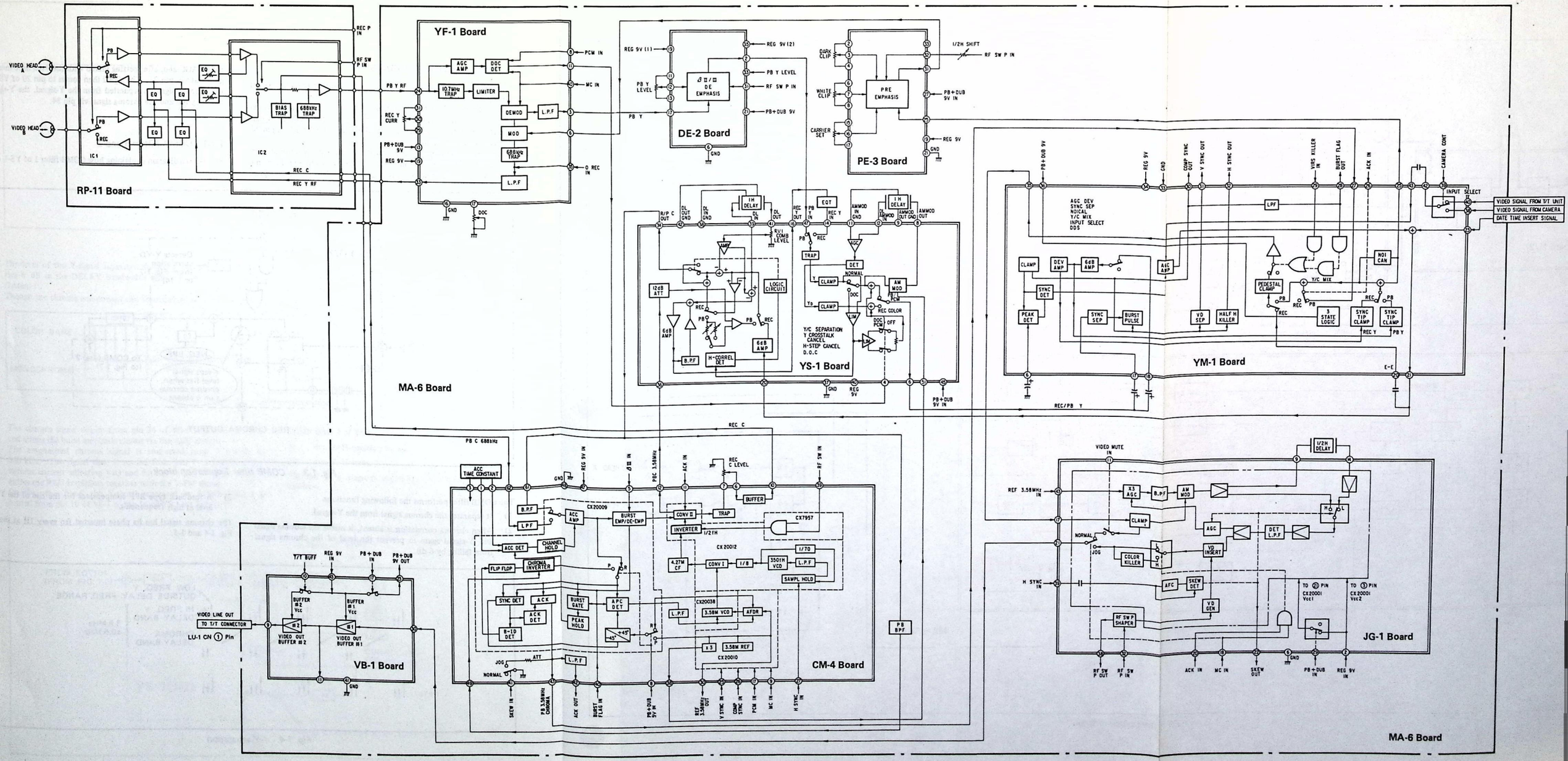

Fig. 1-1. Block diagram of the video circuits

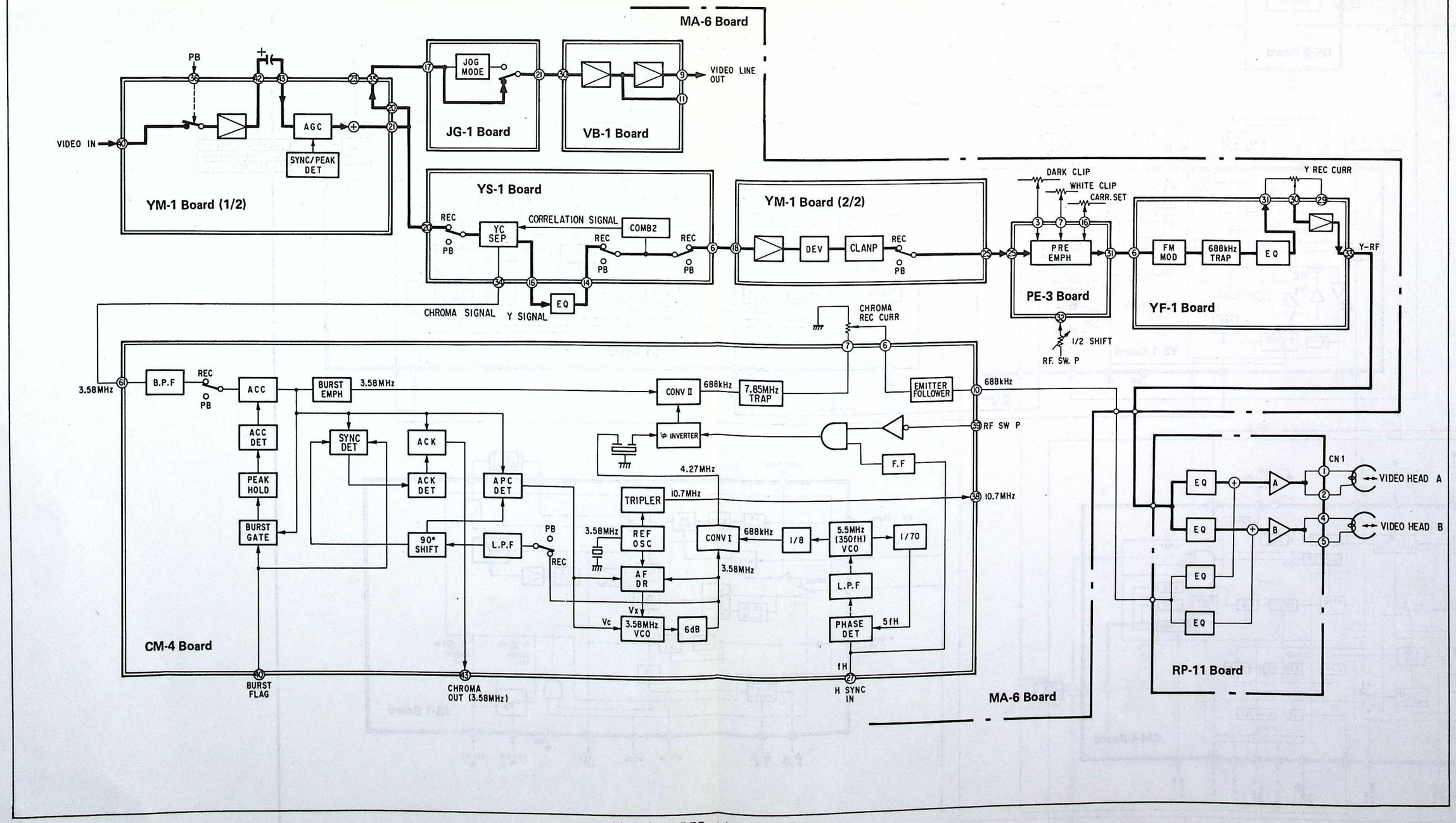

Fig. 1-2. REC system block diagram

1-1. RECORDING CIRCUITS

Fig. 1-2 is a blcok diagram indicating the paths of the video signal during recording.
The SL-B5 receives video signal from a camera or TV. The TV video signal comes from the TT-B5 which receives a broadcast signal. It comes to pin 40 of YM-1 mounted on the MA-6 board via pin 24 of the connector connecting to TT.
The camera video signal comes to pin 38 of YM-1 via the camera connector. YM-1 selects the camera signal when pin 39 is at H and the signal coming from TT when at L. The selected video signal passes AGC and, after getting mixed with the date/time insert signal, goes out via pin 21. The signal then comes to pin 20 of YS-1 where the chroma signal is separated from the Y-signal. the Y-signal goes out via pin 6 and the chroma signal via pin 34.

1-1-1. COMB Filters 1 and 2

Fig. 1-3 is a diagram explaining how COMB filter 1 of YS-1 operates.

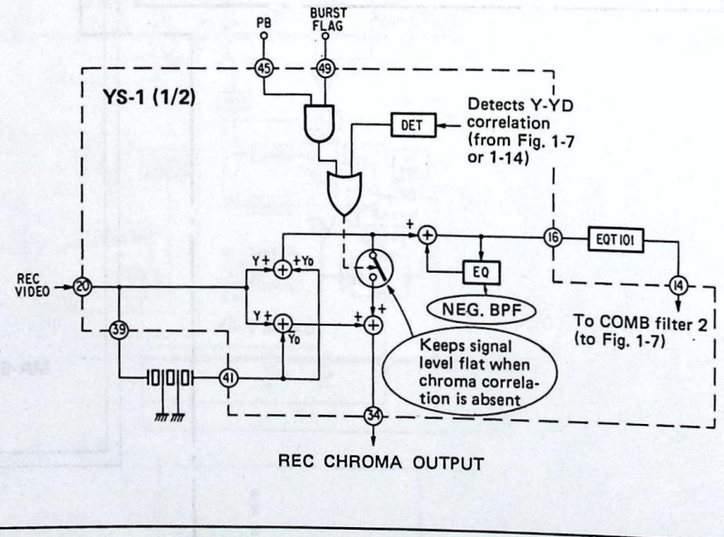

Fig. 1-3. COMB filter 1 operation block

The COMB filter performs the following functions.

1) It separates the chroma signal from the Y-signal.
2) When chroma correlation is absent, it mixes the chroma signal and Y-signal again to prevent the level of the chroma signal from falling by 6 dB.
3) A feedback type BPF compensates for the rise of the Y-signal level at high frequencies.

The chroma signal has its phase inverted fro every 1H as shown in Fig. 1-4 and 1-5.

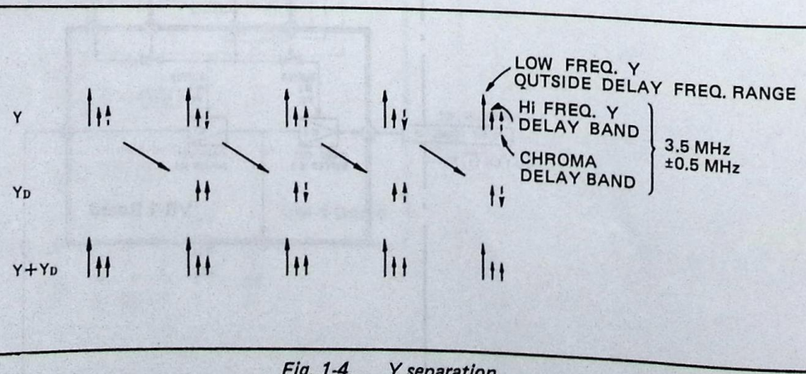

Fig. 1-4. Y separation

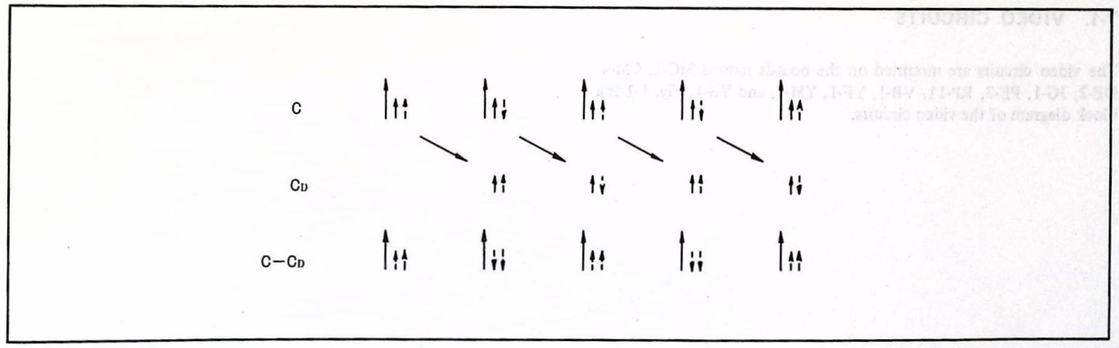

Fig. 1-5. Chroma separation

The level of the Y-signal separated from the chroma signal would rise 6 dB in the DELAY bandwidth unless a feedback type BPF flattens it.
Though the chroma component can be separated with the aid of the delayed component, the Y-component remains outside the DELAY bandwidth and therefore BPF is needed to remove it. The chroma level is down by 6 dB where there is no correlation, it is compensated for by adding C−CD with C + CD (see Fig. 1-6).

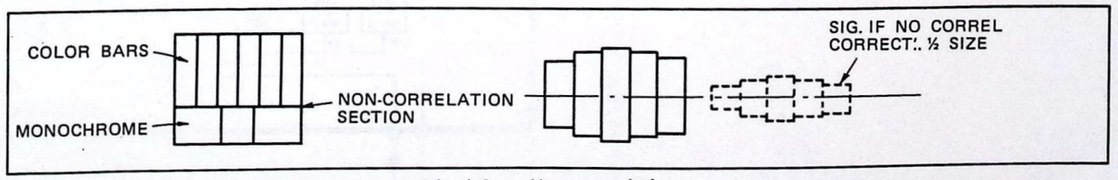

Fig. 1-6. Non−correlation

The chroma signal comes from pin 34 of YS-1 to pin 61 of CM-4 and enters the burst emphasis circuit via the ACC circuit.
The emphasized chroma signal is converted from 3.58 MHz to 688 kHz. The signal then is routed from pin 7 to RV108 (REC chroma current adjusting VR) and further to pin 10 from where it enters the REC amplifiers together with the Y-FM signal.
On the other hand, the Y-signal separated by COMB filter 1 is routed from pin 16 of YS-1 to pin 14 of YS-1 via EQT101.

COMB filter 2 of YS-1

1) detects H-correlation, and
2) cancels H-steps.

Fig. 1-7 is a diagram explaining how COMB filter 2 of YS-1 operates.

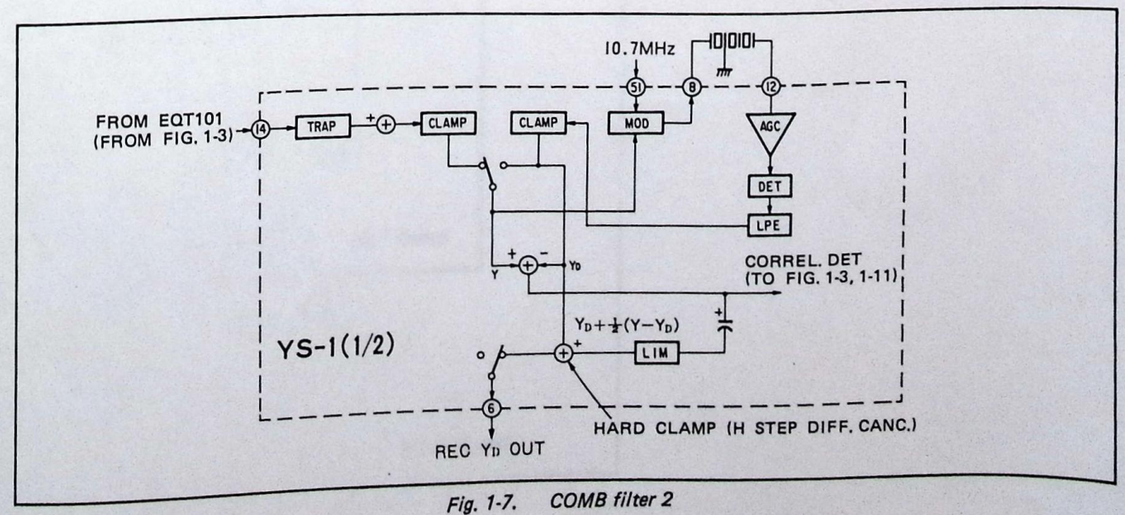

Fig. 1-7. COMB filter 2

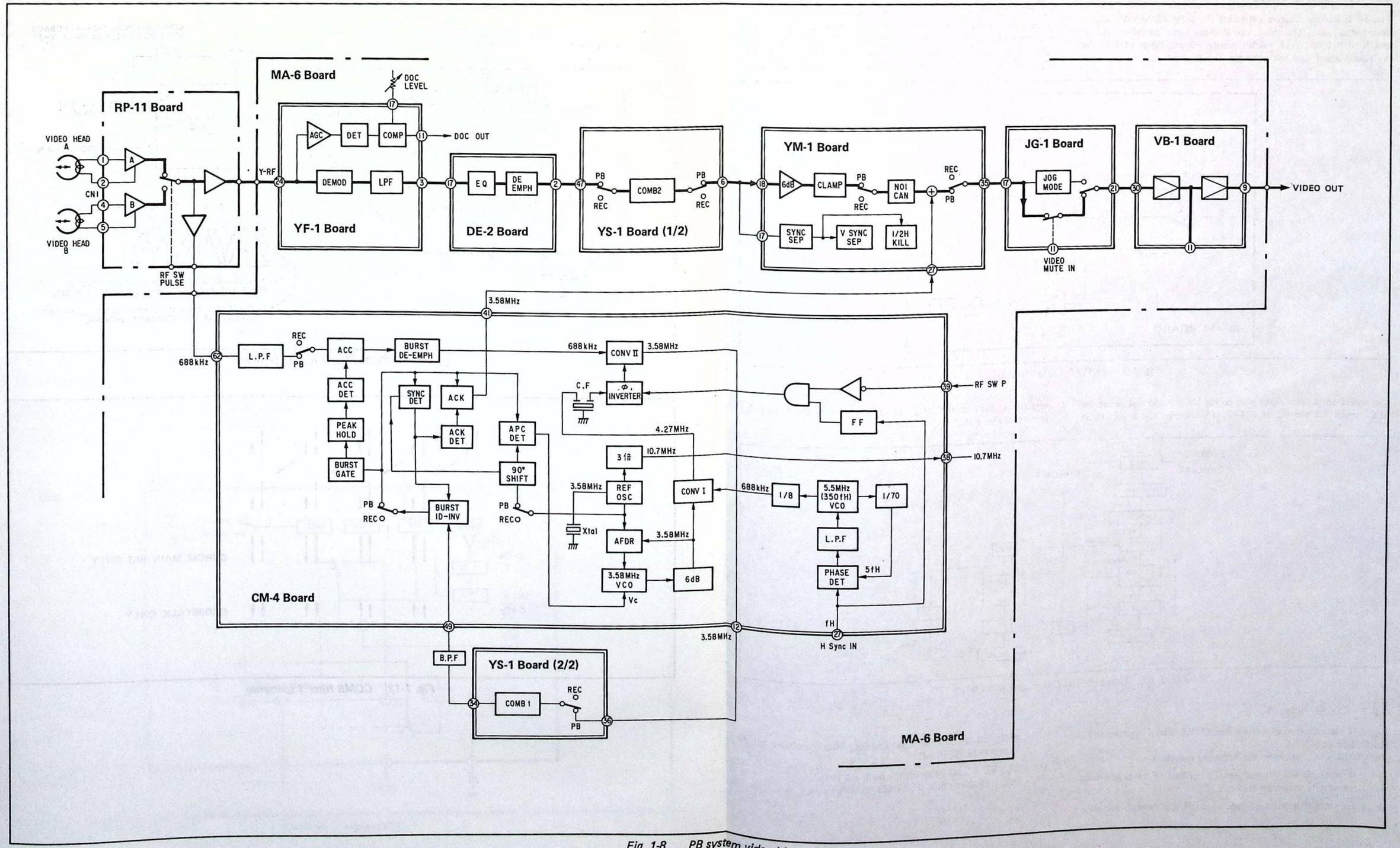

Fig. 1-8. PB system video block diagram

VIDEO OPERATION

1-2. PLAYBACK CIRCUITS

Fig. 1-8 is a block diagram indicating the paths of the video signals during playback. The video signals come form the video heads A and B to IC1 of RP-11. After passing PB amplifiers of IC1, the A-channel signal goes out from pin 27 and the B-channel one from pin 16 to the switching circuit of IC2. It selects the A-channel when the RF-SW pulse applied to pin 19 is H and the B-channel when the pulse is L, making the two components a continuous signal. A filter then separates the chroma signal from the Y-signal and the Y-signal goes to pin 8 of CN2 and the chroma signal to pin 5 of CH2. Fig. 1-9 is a block diagram explaining operation of RP11.

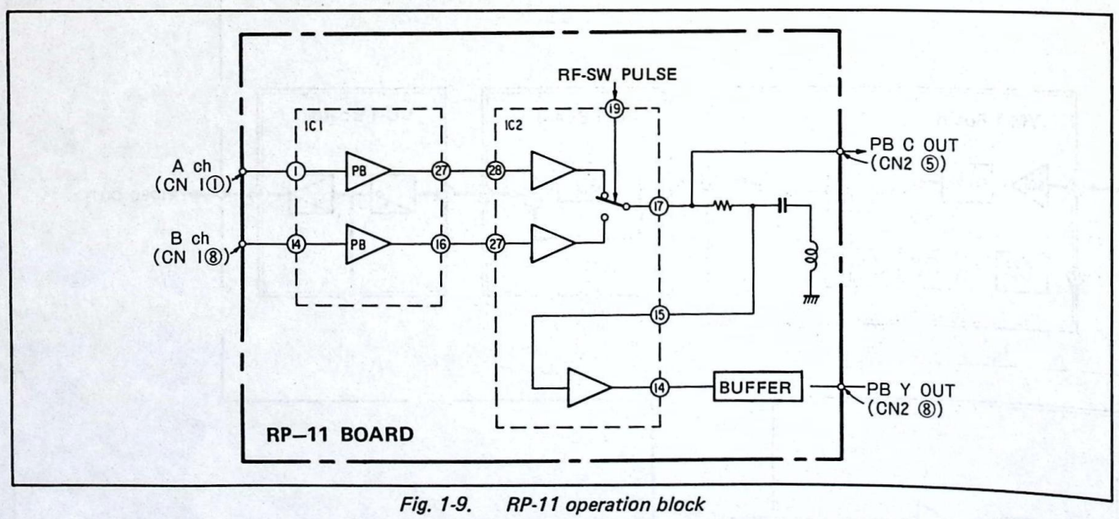

Fig. 1-9. RP-11 operation block

The separated chroma signal goes to the MA-6 board and enters the ACC circuit via pin 62 of CM-4. The chroma signal gets burst emphasis applied in the ACC circuit then enters the CONV II circuit (see Fig. 1-10).

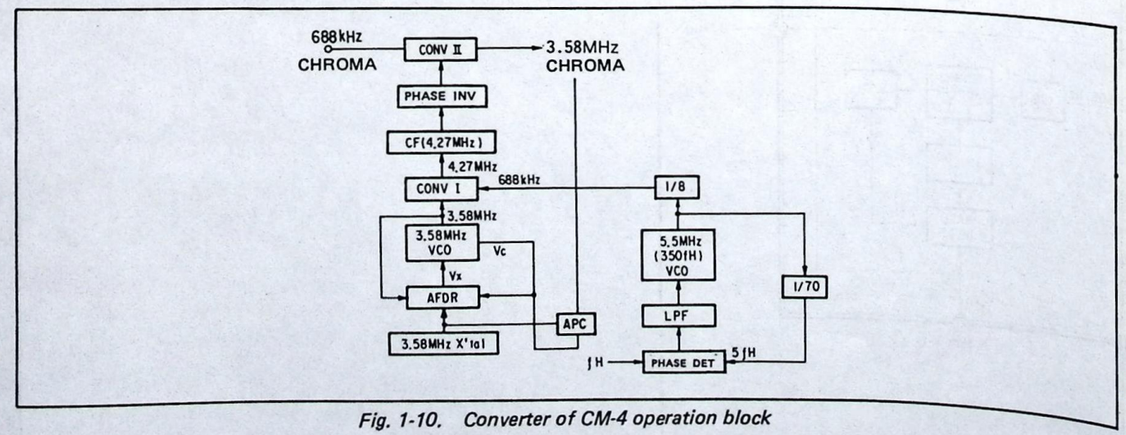

Fig. 1-10. Converter of CM-4 operation block

1-2-1. COMB Filter 1

Fig. 1-11 are a diagram explaining how COMB filter 1 operates and a block diagram of YS-1.
The COMB filter 1 performs the following functions.

1) It separates the chroma signal from that of the neighboring tracks with minimum crosstalk.
2) To improve picture quality, crosstalk components are negatively fed back to the input line for highly correlative signals except BURST FLAG.
3) BURST FLAG turns off the feedback loop.

Fig. 1-12 shows how the COMB filter operates.

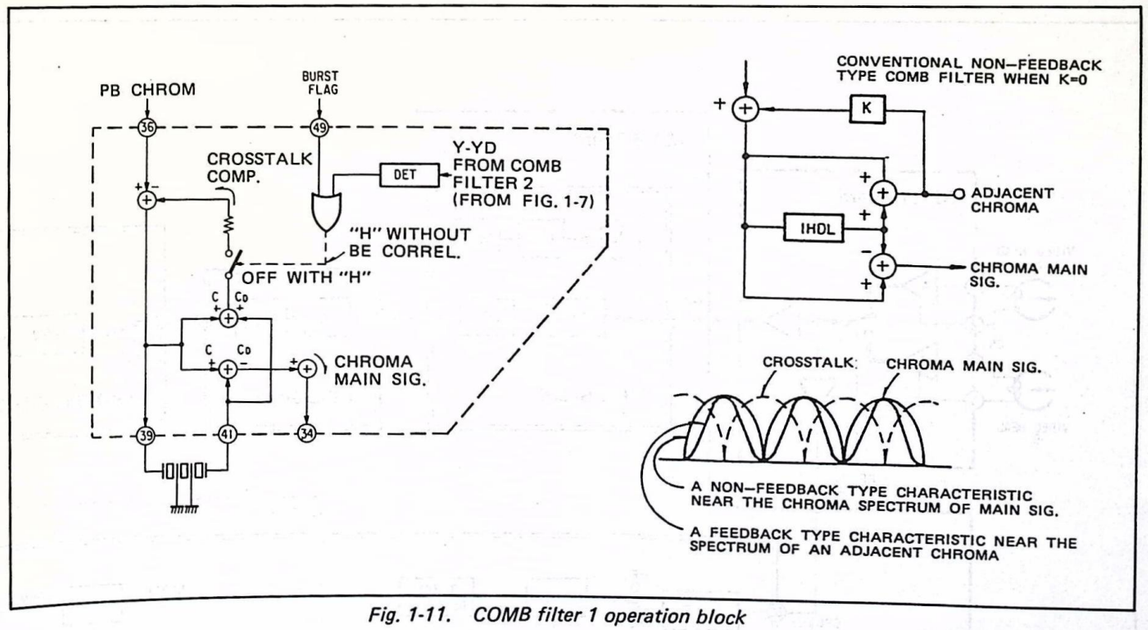

Fig. 1-11. COMB filter 1 operation block

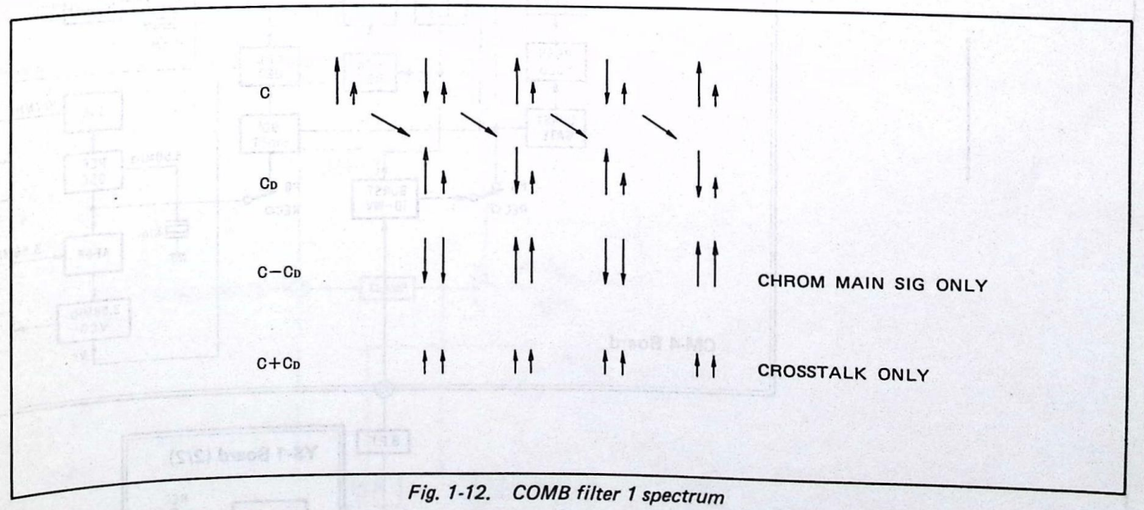

Fig. 1-12. COMB filter 1 spectrum

1-2-2. Automatic Frequency Drift Rejector (AFDR)

Fig. 1-13 is a block diagram of AFDR.
The center frequency of VCO is forced to stay at 3.85 MHz by control voltages Vc and Vx. AFDR controls the center frequency of VCO at around 3.85 MHz. The APC circuit applies signal to VCO according to variation of the phase of the reproduced video signal to control VCO.

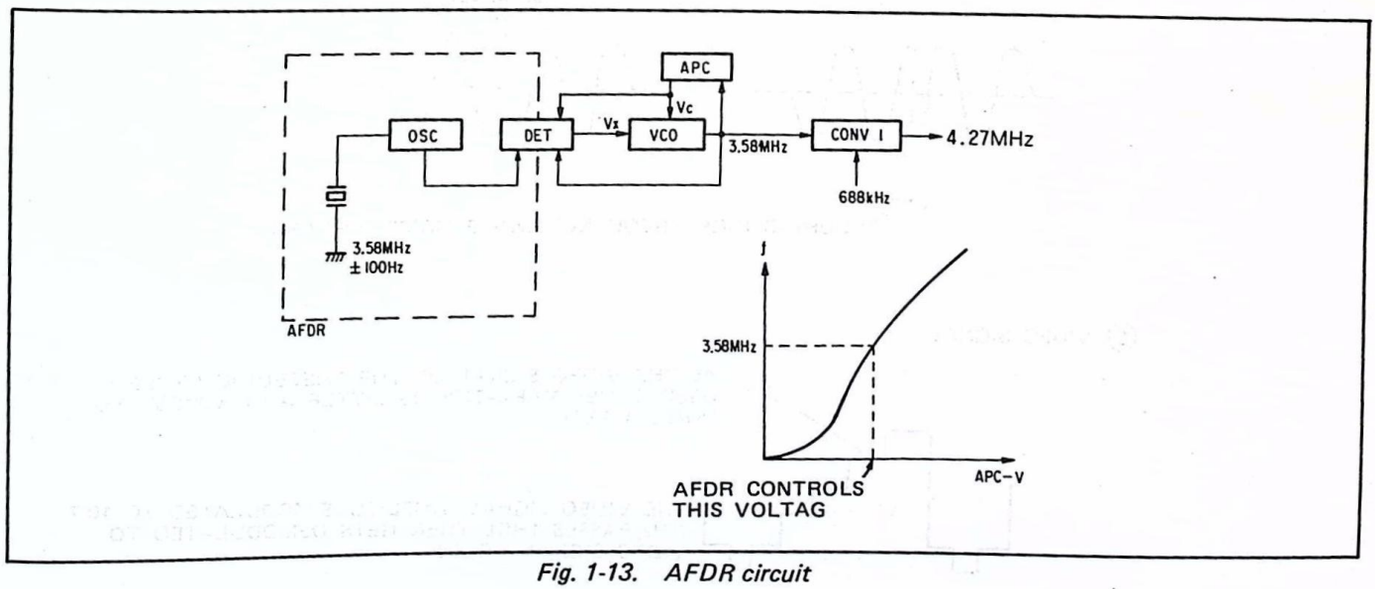

Fig. 1-13. AFDR circuit

1-2-3. Video DOC Circuit

The SL-B5 uses the video signal of the preceding cycle (1H) though other models including SLC uses the YRF signal to perform DOC.

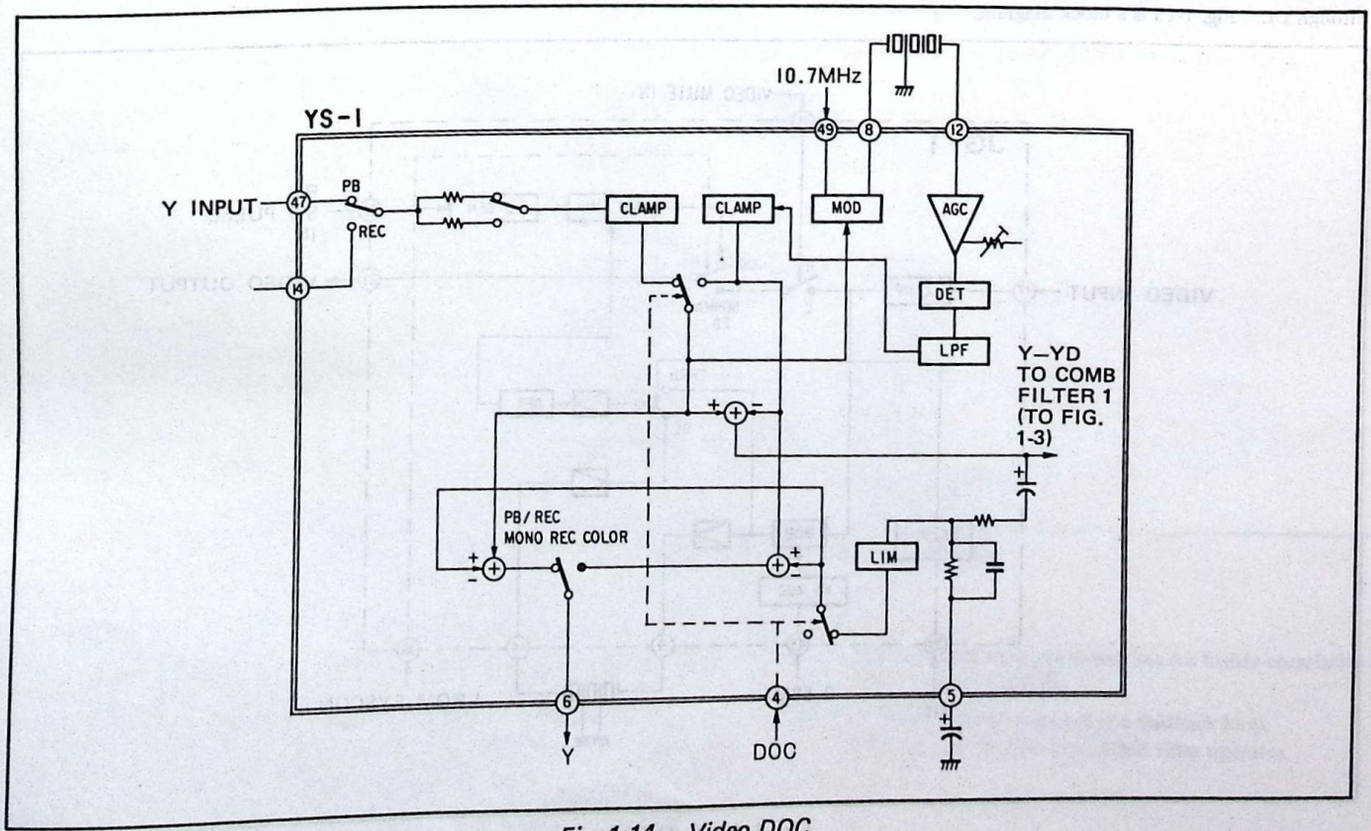

Fig. 1-14. Video DOC

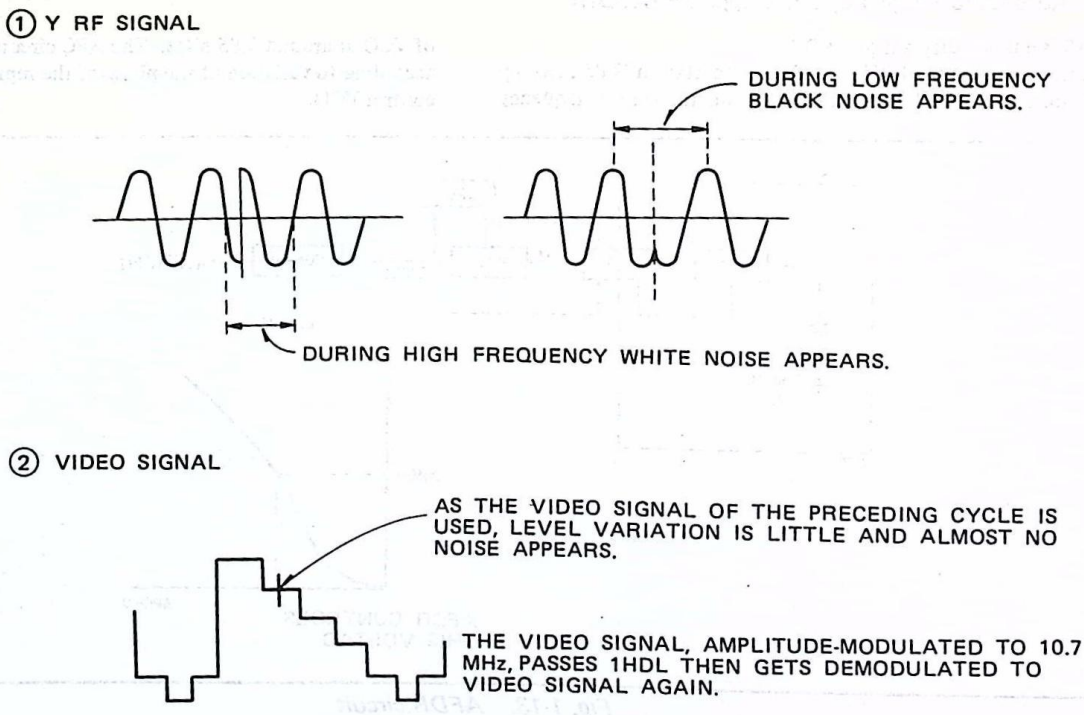

1-2-4. Playback Under Varying Speed (JOG)

During playback under varying speed, the video signal is amplitude-modulated to 10.7 MHz then its timing is adjusted by passing it through DL. Fig. 1-15 is a block diagram.

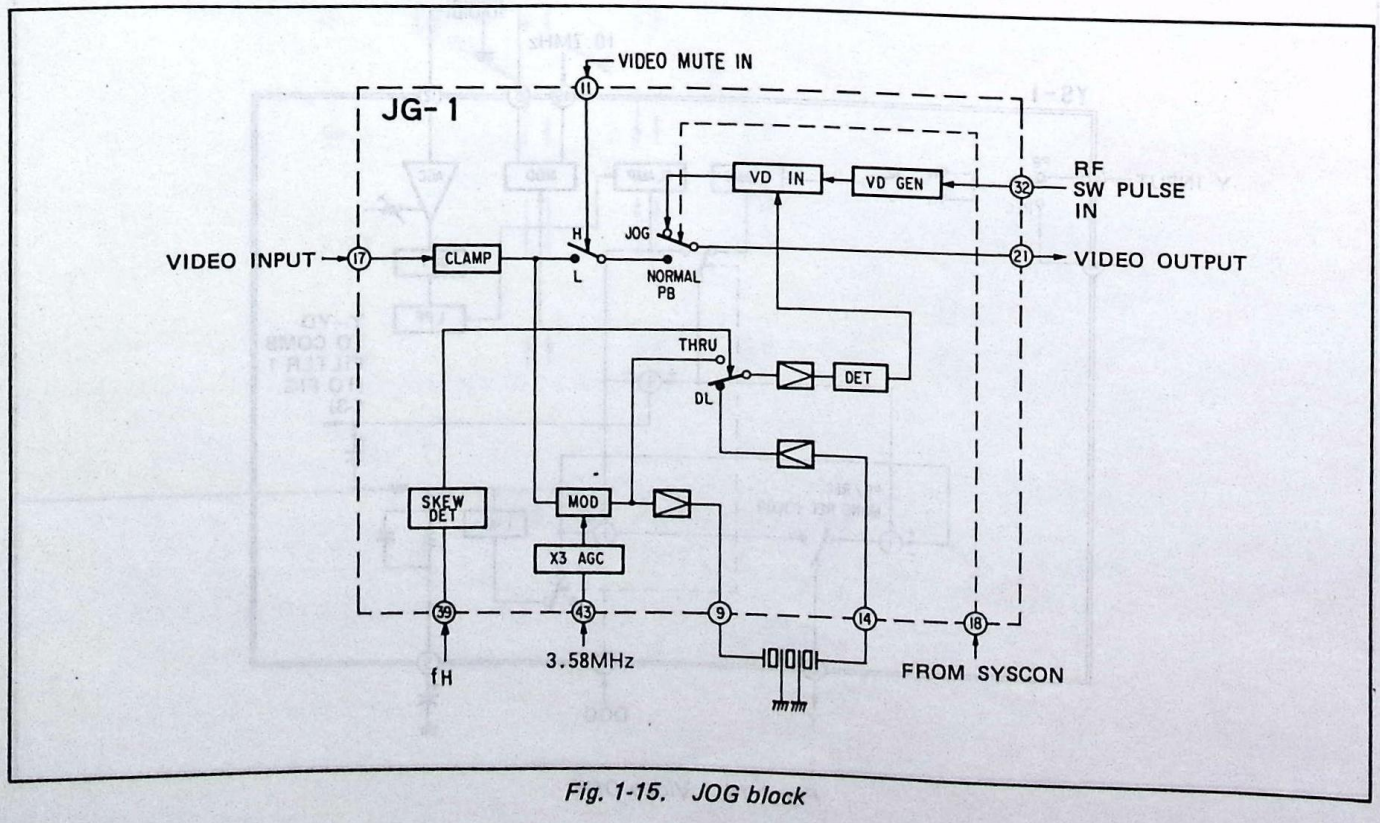

Fig. 1-15. JOG block

7-2. SYSTEM CONTROL

2-1. GENERAL

Two microcomputers IC1 (CPU1) and IC2 (CPU2) mounted on the FD-3 board mainly perform system control. Inputs for system control are the statuses of the front-panel function keys and switches, error signals, information from the servo block, information from the reel servo block, and input signals from the tuner timer unit and the camera. Recieving these signals, the microcomputers generate signals which control operations to be performed. Output signals of system control are delivered via a serial-to-parallel converter to the servo block, video block, reel servo block, and audio block. Other output signals control the front-panel LCD and LED indicators, solenoid operation, threading motor, TT unit, video camera, and power-saving operation during battery drive. Thus almost all operations are controlled by signals which the two system control microcomputers generate.

Fig. 2-1 is a block diagram of the system control section with input/output signals shown together. The system control section is mostly electrical. In every mode of operation, electrical signals controlled by the servo block and reel block are delivered to motors according to indications the CPUs give. The mechanisms of the system control section include only the threading mechanism, brake solenoids which applies brake to the reels, pinch roller solenoide which control the action of the pinch roller. These solenoids hold their states, energized or de-energized, until a pulse signal of 200 msec long comes.

Fig. 2-2 shows the layout of the motors and sensors. The sensors include the anti-condensation (DEW) sensor, thermostat, and tape end sensors. A loose tape is detected by checking the rotation of the reel motors during FF and REW and not detected by any sensor.

As part of the system control section, a microcomputer and character generator are mounted on the DS-5 board and compose a DDS circuit block. The microcomputer controls the character generator and delivers signals to CPU1 of FD-3 to let the LCD indicate information.

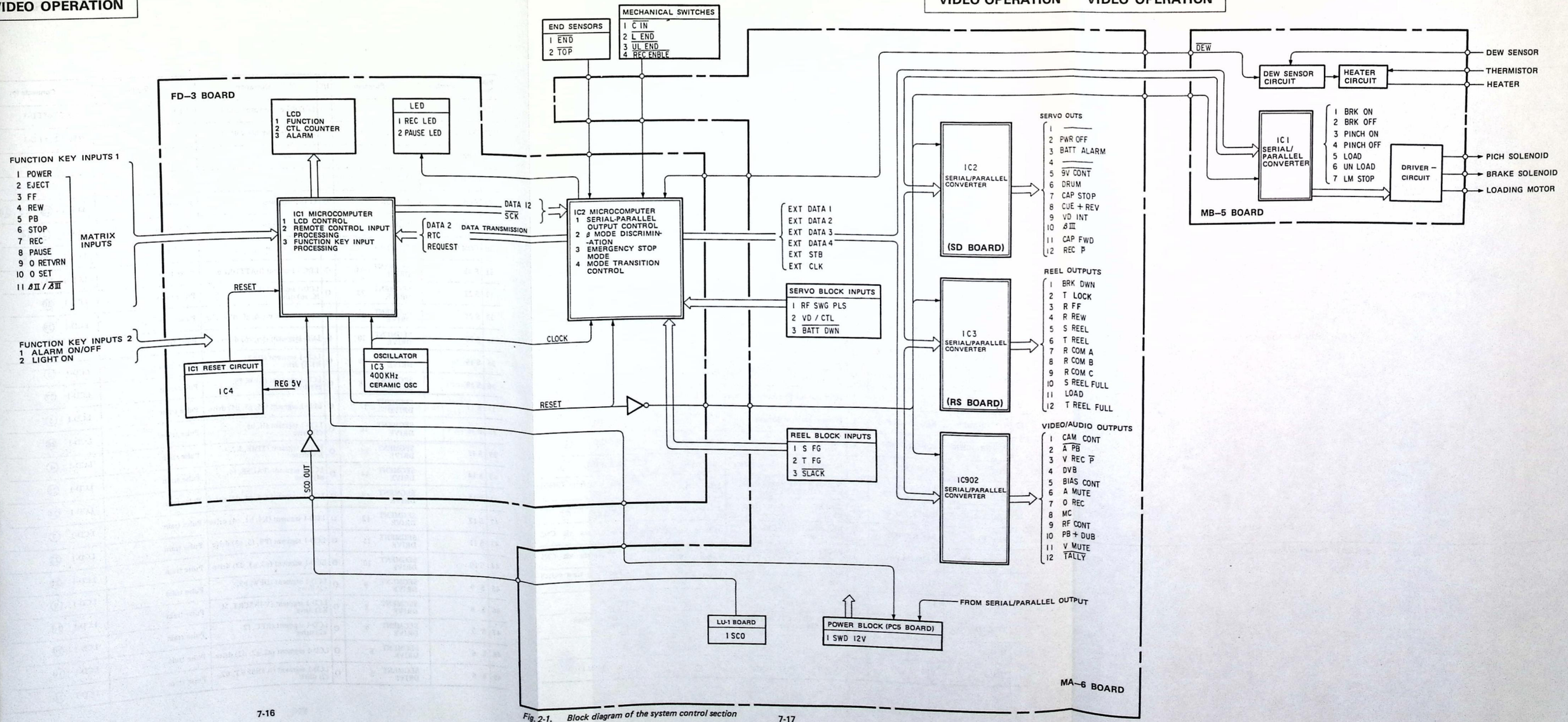

Fig. 2-1. Block diagram of the system control section

VIDEO OPERATION VIDEO OPERATION

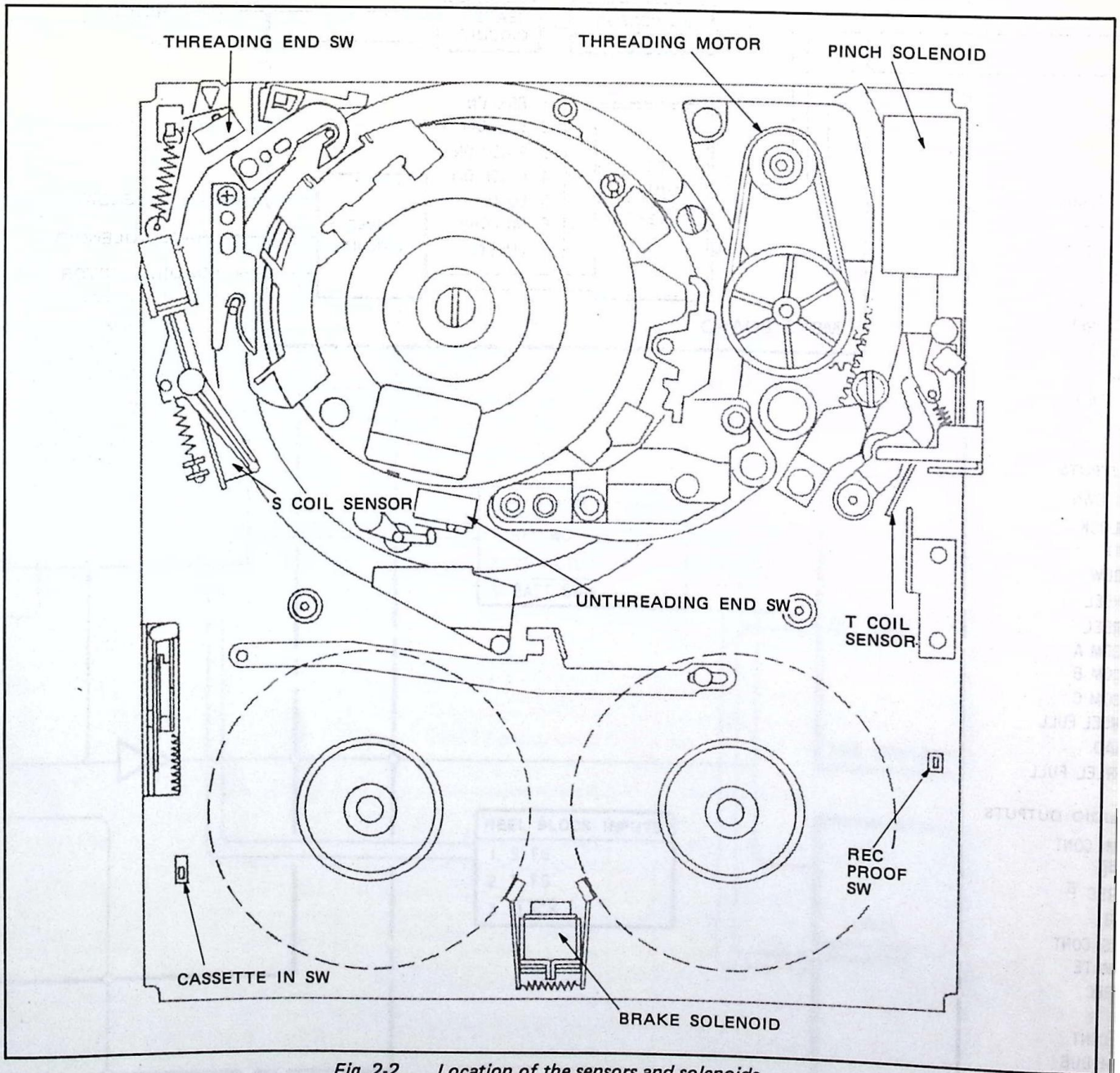

Fig. 2-2. Location of the sensors and solenoids

2-2. FUNCTIONS OF CPU1 (IC1 on the FD-3 Board)

CPU1 performs LCD control, remote control input processing, power on/off control, timer REC, CTL MUTE, 8-minute PAUSE resetting, and function key input processing, etc.

PIN No.	Symbol	Function	I/O	Operation	Signal	Connects to:
1	NC					
2	KMO2	KEY MATRIX OUTPUT 2	O	For scanning function keys		Function key switches,
3	KMO1	KEY MATERIX OUTPUT 1	O	For scanning function keys		Function key switches,
4	KMO0	KEY MATRIX OUTPUT 0	O	For scanning function keys		Function key switches,
5	DATA 21	DATA 2→1	I	Serial data between CPUs	Serial data pulse train	IC2 (FD-3) ⑮
6	DATA 12	DATA 1→2	O	Serial data between CPUs	Serial data pulse train	IC2 (FD-3) ⑯
7	$\overline{\text{SCK}}$	ERIAL CLOCK	O	Times serial data transmission between CPUs	Serial pulse train	IC2 (FD-3) ⑫
8	$\overline{\text{REC READY}}$	REC READY	O	Indicates readiness for recording during timer REC	L if no tape is loaded or write-protect notch broken	Switches Q6 and to CN901 and TT
9	POWER $\overline{\text{ON/OFF}}$	POWER ON/OFF	O	Power control	L during off	Power control block (PC-5) ⑥②
10	SYSRST	SYSTEM RESET	O	Resets CPU2 and expanded output ports	Pulse when power is on	IC902 (MA-6) ⑯
11	$\overline{\text{CN ON}}$	CONNECTOR ON	I	Discriminates TT unit connection	L if TT unit is connected	Power control block (PC-5) ④⑥
12	REC ENABLE	REC ENABLE	I	Prevents accidental erasure	L if cassette has write-protect notch	Write-protect switch (S1003)
13	$\overline{\text{POWER DOWN}}$	POWER DOWN	I	Detects power-off	L when power is off	IC6 (FD-3) ①
14	RQT	REQUEST	I	Requests CPU2 to transmit data	Pulse train	IC2 (FD-3) ④⑨
15	$\overline{\text{SCO}}$	REMOCON SERIAL CORD	I	Wireless remote control serial input or DDS data	Serial data	Via Q5, from CN901 to TT
16	$\overline{\text{TIMER REC}}$	TIMER REC	I	Send REC signal during timer REC.	L during timer REC	Power control block (PC-5) ⑦⑤
17	REC. REV	REC REVIEW	I	Request for REC REVIEW from camera	H during REC REVIEW	To camera via CN5
18	CAM PAUSE	CAMERA PAUSE	I	PAUSE command from camera a (same as function key PAUSE)	H when camera PAUSE switch is ON	To camera via CN5
19	β III	β III	I	Selects β II or β III except druing play	H with β III	Recording time switch (SW 15)
20	X2	NC				
21	VD/CTL	VD/CTL	I	To read VD or CTL (for adjusting timing to make scenes continuos)	VD, CTL timing	FG/CTL block (SP-1)
22	Vss	Vss		GND		
23	VLC 3	VLC 3		LCD drive reference voltage	0.7 V	R53/54 or FD-3

PIN No.	Symbol	Function	I/O	Operation	Signal	Connects to:
24	VCL 2	VCL 2		LCD drive reference voltage	2.1 V	R52/53 of FD-3
25	VLC 1	VLC 1		LCD drive reference voltage		R51/52 or FD-3
26	VPP	VPP		5 V power		
27	COM 3	NC				
28	COM 2	COMON 2	O	LCD-1 common	Pulse train	LCD-1 ⑮ ㉒ ㉛
29	COM 1	COMON 1	O	LCD-1 common	Pulse train	LCD-1 ② ⑭
30	COM 0	COMON 0	O	LCD-1 common	Pulse train	LCD-1 ⑥ ⑧
31	S 23	SEGMENT DRIVE 23	O	LDC-1 segment (BATT) drive	Pulse train	LCD-1 ①
32	S 22	SEGMENT DRIVE 22	O	LCD-1 segment (EJECT, f6, e6) drive	Pulse train	LCD-1 ㉚
33	S 21	SEGMENT DRIVE 21	O	LCD-1 segment (a6, g6, d6) drive	Pulse train	LCD-1 ㉙
34	S 20	SEGMENT DRIVE 20	O	LCD-1segment (b6, c6) drive	Pulse train	LCD-1 ㉘
35	S 19	SEGMENT DRIVE 19	O	LCD-1 segment (DATE, K1 E) drive	Pulse train	LCD-1 ③
36	S 18	SEGMENT DRIVE 18	O	LCD-1 segment (REW, f5, e5) drive	Pulse train	LCD-1 ㉗
37	S 17	SEGMENT DRIVE 17	O	LCD-1 segment (a5, g5, d5) drive	Pulse train	LCD-1 ⑤
38	S 16	SEGMENT DRIVE 16	O	LCD-1 segment (H, b5, c5) drive	Pulse train	LCD-1 ㉖
39	S 15	SEGMENT DRIVE 15	O	LCD-1 segment (TIME, K2, K3) drive	Pulse train	LCD-1 ④
40	S 14	SEGMENT DRIVE 14	O	LCD-1 segment (PAUSE, f4, e4) drive	Pulse train	LCD-1 ㉕
41	S 13	SEGMENT DRIVE 13	O	LCD-1 segment (a4, g4, d4) drive	Pulse train	LCD-1 ㉔
42	S 12	SEGMENT DRIVE 12	O	LCD-1 segment (K4, b4, c4) drive	Pulse train	LCD-1 ⑦
43	S 11	SEGMENT DRIVE 11	O	LCD-1 segment (PB, f3, e3) drive	Pulse train	LCD-1 ㉓
44	S 10	SEGMENT DRIVE 10	O	LCD-1 segment (a3, g3, d3) drive	Pulse train	LCD-1 ㉑
45	S 9	SEGMENT DRIVE 9	O	LCD-1 segment (DEW, b3, c3) drive	Pulse train	LCD-1 ⑨
46	S 8	SEGMENT DRIVE 8	O	LCD-1 segment (V-INSERT, M, K5) drive	Pulse train	LCD-1 ⑩
47	S 7	SEGMENT DRIVE 7	O	LCD-1 segment (REC, f2 e2) drive	Pulse train	LCD-1 ⑳
48	S 6	SEGMENT DRIVE 6	O	LCD-1 segment (a2, g2, d2) drive	Pulse train	LCD-1 ⑲
49	S 5	SEGMENT DRIVE 5	O	LCD-1 segment (A-INSERT, b2, c2) drive	Pulse train	LCD-1 ⑪

PIN No.	Symbol	Function	I/O	Operation	Signal	Connects to:
50	S 4	SEGMENT DRIVE 4	O	LCD-1 segment (K6, K7) drive	Pulse train	LCD-1 ⑫
51	S 3	SEGMENT DRIVE 3	O	LCD-1 segment (FF, f1, e1) drive	Pulse train	LCD-1 ⑱
52	S 2	SEGMENT DRIVE 2	O	LCD-1 segment (a1, g1, d1) drive	Pulse train	LCD-1 ⑰
53	S 1	SEGMENT DRIVE 1	O	LCD-1 segment (S, b1, c1) drive	Pulse train	LCD-1 ⑯
54	S 0	SEGMENT DRIVE 0	O	LCD-1 segment (βII, I. F.) drive	Pulse train	LCD-1 ⑬
55	RTC	RIAL TIME CLOCK	I	Sync signal controlled by real-time clock IC2	400 Hz pulse train	IC2 (FD-3) ㊽
56	RESET	RESET	I	Reset pulse	Reset pulse	
57	CLK 1	CLOCK 1	I	System clock	400 kHz clock pulses	IC3 (FD-3), X1 (400 kHz osc)
58	VDD	VDD		5 V power		
59	CLK 2	NC				
60	KMI 2	KEY MATRIX INPUT 2	I	For scanning function switches		Function key switches
61	KMI 1	KEY MATRIX INPUT 1	I	For scanning function switches		Function key switches
62	KMI 0	KEY MATRIX INPUT 0	I	For scanning function switches		Function key switches
63	POWER ON	POWER ON	O	To read power switch state	H when power switch is on	To IC3 ④ via R40 of FD-3
64	KMO 3	KEY MATRIX OUTPUT 3	O	For scanning function switches		Function key switches

2-3. FUNCTION OF CPU2 (IC2 on the FD-3 Board)

CPU2 performs serial-parallel output control, β mode discrimination, emergency stop mode control, mode transition processing, and battery level detection, etc.

PIN No.	Symbol	Function	I/O	Operation	Signal	Connects to:
1	NC					
2	REC	REC LED	O	REC signal	H when lit	To LED via driver Tr
3	RESET	RESET	I	Reset pulse	Reset pulse	IC1 (FD-3) ⑩
4	NC					
5	CL 1	CLOCK 1	I	System clock	400kHz clocl pulses	IC3 (FD-3), X1 (400 kHz oscillator)
6	NC					
7	VDD			5 V power		
8	NC					
9	CL 2	NC				
10	T END	TAPE END	I	Detects tape end	H at tape end	
11	POO/INTO			GND		
12	$\overline{SCK}$	SERIAL CLOCK	I	Serial clock	Serial pulse train	IC1 (FD-3) ⑦
13	NC					
14	NC					
15	SATA 21	DATA 2→1	O	Serial data transferred between CPUs	Serial data pulse train	IC1 (FD-3) ⑤
16	DATA 12	DATA 1→2	I	Serial data transferred between CPUs	Serial pulse train	IC1 (FD-3) ⑥
17	BATT OPE	BATTERY	I	Indicates battery drive	H during battery drive	Power control block (PC-5) ㊺
18	$\overline{DEW\ SENSE}$	DEW SENSE	I	DEW sensor signal	H when DEW is detected	To MB-5 via CN1
19	$\overline{BATT\ DOWN}$	BATTERY DOWN	I	Indicates battery level	L when battery is below 11.5 V	Servo predrive (SD-1) ㊿
20	DOWN/$\overline{UP}$	DOWN/UP	O	Indicates whether counter counts down or up	H when down	To TT via CN901
21	$\overline{L\ END}$	LOADING END	I	Indicates end of tape threading	L at end of threading	Threading end switch (S1001)

PIN No.	Symbol	Function	I/O	Operation	Signal	Connects to:
22	$\overline{\text{UL END}}$	UNLOADING END	I	Indicates end of tape unthreading	L at end of unthreading	Unthreading end switch (S1002)
23	P 52	NC				
24	P 53	NC				
25	$\overline{\text{SLACK}}$	SLACK SENSER	I	Indicates loose tape	L when tape is loose	Reel main block (RM-9) (15)
26	P41	NC		Indicates a cassette tape is loaded	L when a cassette tape is loaded	C IN switch (S17)
27	NC					
28	$\overline{\text{C IN}}$	CASSETTE IN	I		L at casset in	C IN switch (S17)
29	NC					
30	$\overline{\text{CAM SEL}}$	CAMERA SELECT	I	Input select (LINE/TV/CAMERA)	L at camera select	To CN901 and TT
31	Vss			GND		
32	X1	X1	I	Reference clock signal for internal timer	400kHz clock pulses	IC3 (FD-3), X1 (400kHz oscillator)
33	VDD			5 V power		
34	X2			NC		
35	NC					
36	EX DATA1	SERIAL PARALLEL PORT 1 DATA	O	Serial data to expanded output port 1	Serial data pulses	IC902 (MA-6) (18)
37	EX DATA2	SERIAL PARALLEL PORT 2 DATA	O	Serial data to expanded output port 2	Serial data pulses	Servo predriver baord (SD-1) (62)
38	EX DATA3	SERIAL PARALLEL PORT 3 DATA	O	Serial data to expanded output port 3	Serial data pulses	Reel control board (RS-1) (13)
39	EX DATA4	SERIAL PARALLEL PORT 4 DATA	O	Serial data to expanded output port 4	Serial data pulses	IC1 (18) on threading motor/solenoid drive baord (MB-5)
40	NC					
41	T. FG	TAKE UP REEL FG	I	Counts takeup reel rotation	60 waves per reel rotation	Reel main board (RM-9) (14)
42	S FG	SUPPLY REEL FG	I	Counts supply reel rotation	60 waves per reel rotation	Reel main board (RM-9) (13)
43	RF SW PLS	RF SWITCHING PULSE	I	Selects head	Pulse train	Servo main board (SV-11) (54)
44	VD/CTL	VD/CTL	I	Vertical sync signal or control signal	Pulse train	FG/CTL board (SP-1) (38)
45	NC					
46	EX CLK	SERIAL PARALLEL PORT CLOCK	O	Clock signal for expanded output ports	H during data transfer	IC902 (MA-6) (19)
47	STB	STB	I	Strobe signal for expanded output ports	H during data transfer	IC902 (MA-6) (17)
48	RTC	REAL TIME CONTROL	O	Sync signal sent to real-time clock IC1 (CPU1)	400Hz pulse train	IC1 (FD-3) (55)

PIN No.	Symbol	Function	I/O	Operation	Signal	Connects to:
49	RQT	REQUEST	O	Requests IC1 (CPU1) to transmit data	Pulse train	IC1 (FD-3) ⑭
50	TOP $\overline{\text{END}}$	TAPE TOP END	O	Switches tape end sensor	L during FWD, H during RVS	To TAKEUP/SUPPLY SENSOR board
51	BUZZER	BUZZER	O	Drives alarm buzzer	Pulse train	To IC3 (FD-3) BZ1
52	REC P	REC PAUSE	O	REC PAUSE signal	H on REC PAUSE	To playback LED via Q16 (LED driver) of FD-3

2-4. POWER SUPPLY SECTION

The power supply circuits are mounted on the PC-5 board and part of the FD-3 board. Fig. 2-3 is a block diagram of the power supply.

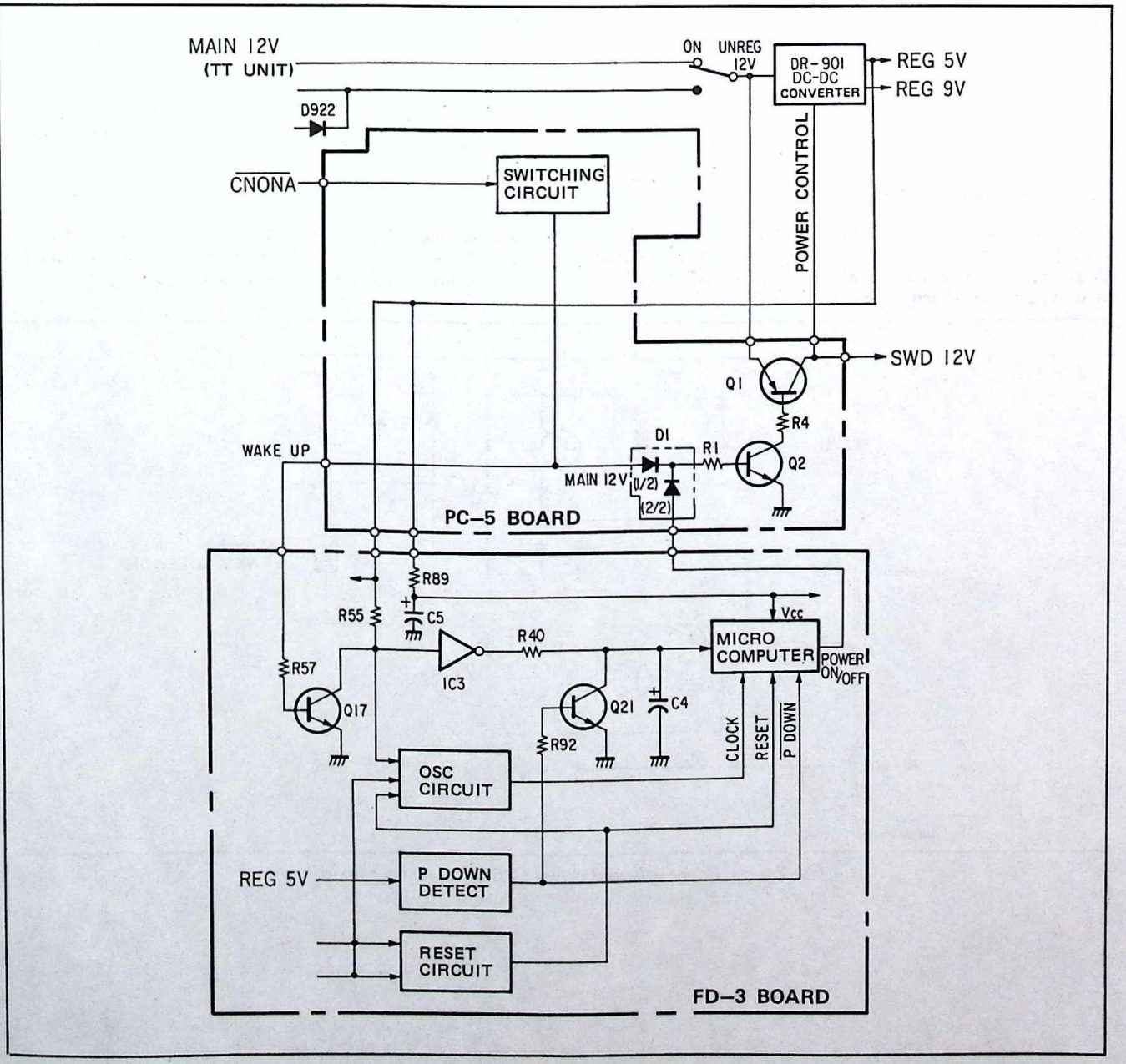

Fig. 2-3. Power circuit

2-5. SOLENOID DRIVE CIRCUITS

The SL-B5 uses two solenoids (plungers) which hold their states unless reset. The solenoid incorporates a magnet which holds the current state of the solenoid. A current is supplied to it only when it is to change its state.

2-5-1. Pinch Solenoid Driver

Fig. 2-4 is the circuit diagram of the pinch solenoid driver.
When turning on, pin 3 (PINCH ON) of IC1 turns to H and Q4 goes on. As a result, the current supplied from UNREG12V turns on the pinch solenoid and flows to Q4 and the built-in magnet keeps the energy.
When turning off, pin 4 (PINCH OFF) of IC1 turns to H and Q5 goes on. As a result, the current supplied from UNREG12V turns off the pinch solenoid and flows to Q5, the built-in magnet keeps the energy.

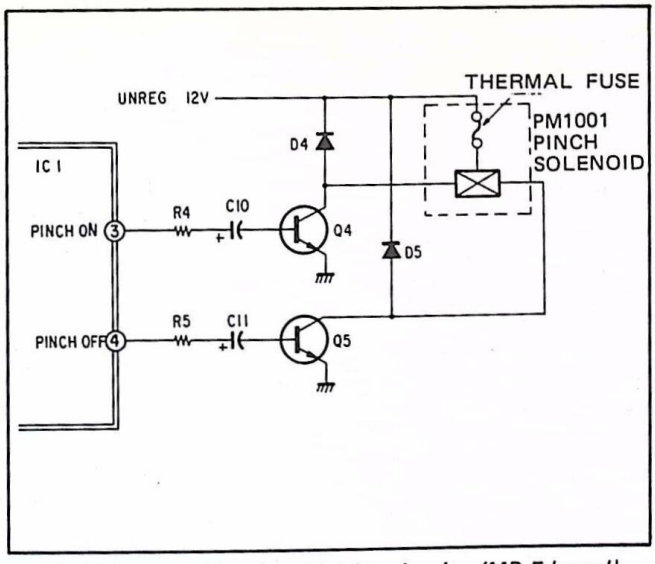

Fig. 2-4. Pinch solenoid drive circuit (MB-5 board)

2-5-2. Brake Solenoid Driver

Fig. 2-5 is the circuit diagram of the brake solenoid driver.
When turning on,pin 1 (BRK ON) of IC1 turns to H then Q15 and Q1 go on. As a result, the current supplied from UNREG12V turns on the brake solenoid and flows to Q15 and Q1.

When turning off, pin 2 (BRK OFF) of IC1 turns to H then Q16 and Q2 go on. As a result, the current supplied from UNREG12V turns off the brake solenoid and flows to Q16 and Q2.

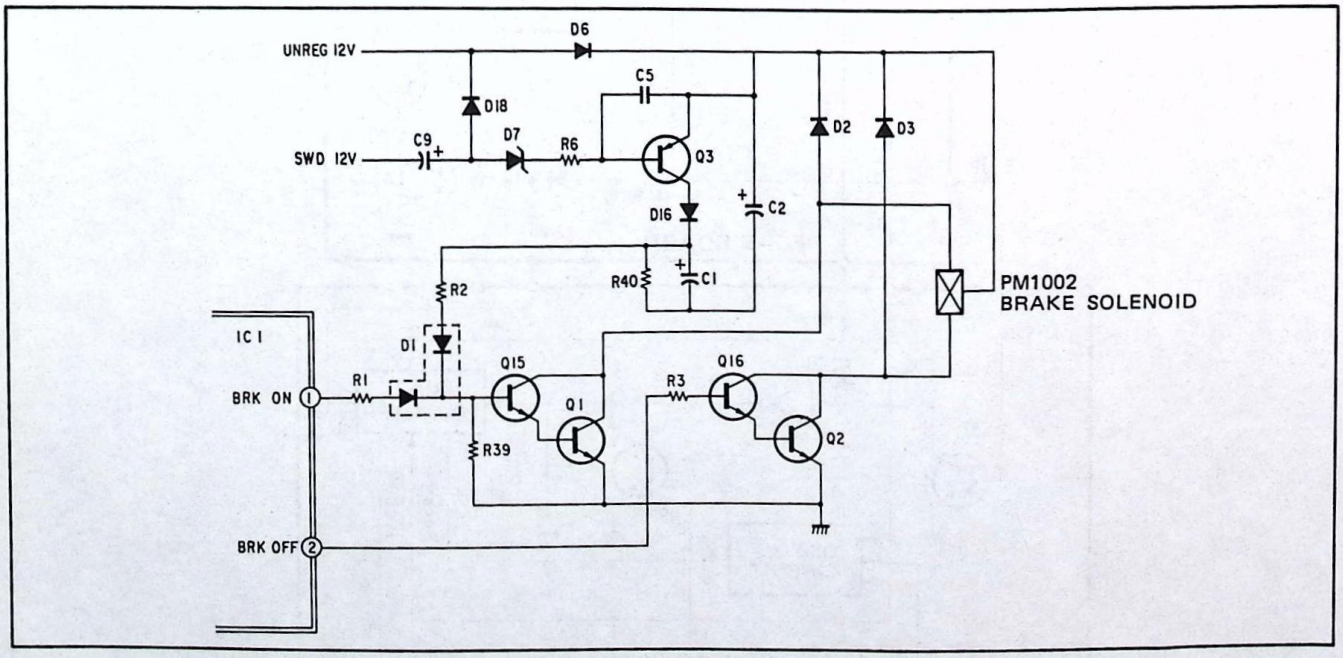

Fig. 2-5 Brake solenoid driver (MB-5: reel motor board)

2-6. THREADING/UNTHREADING CONTROL

For threading the tape, the motor and solenoids are controlled by the following signals.

Cassette in SW signal	$\overline{\text{CIN}}$
Threading end SW signal	$\overline{\text{L END}}$
Unthreading end SW signal	$\overline{\text{UL END}}$

When the tape cassette has come in, $\overline{\text{CIN}}$ turns to L and tape threading operation starts. At the end of threading, the voltage supplied to the threading motor gets shorted according to signal LM STOP so that threading is performed by PWM.
When one turns on the EJECT button, unthreading operation starts and, after $\overline{\text{UL END}}$ has turned to L, the cassette pops up.
Fig. 2-6 is the circuit diagram of the threading motor driver. The direction of motor rotation is reverse during unthreading, with reference to that of threading.

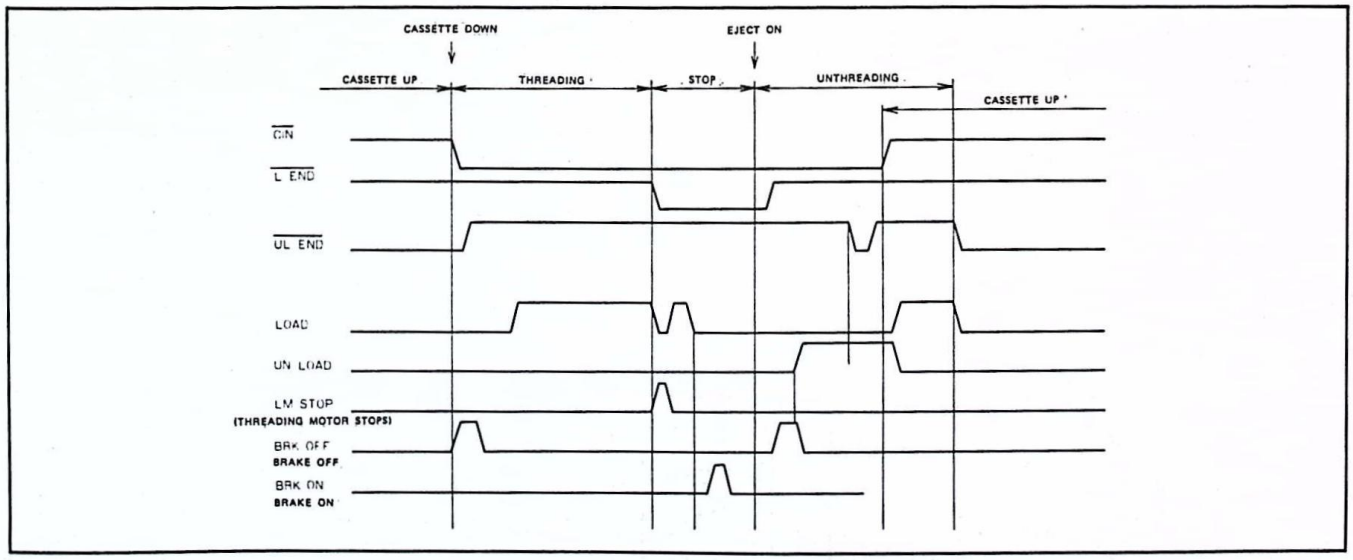

Timing diagram of threading/unthreading

Q10, Q7, and Q8 turn on after signal LOAD turns to H. Then LOAD (+) turns to H, LOAD (–) to L, and threading starts.
Q11, Q6 and Q9 turn on after signal UNLOAD turns to H. Then LOAD (+) turns to L, LOAD (–) to H and unthreading starts.

LM STOP (threading motor stop) is the signal that turns LOAD (+) AND LOAD (–) to apply brake to the threading motor.

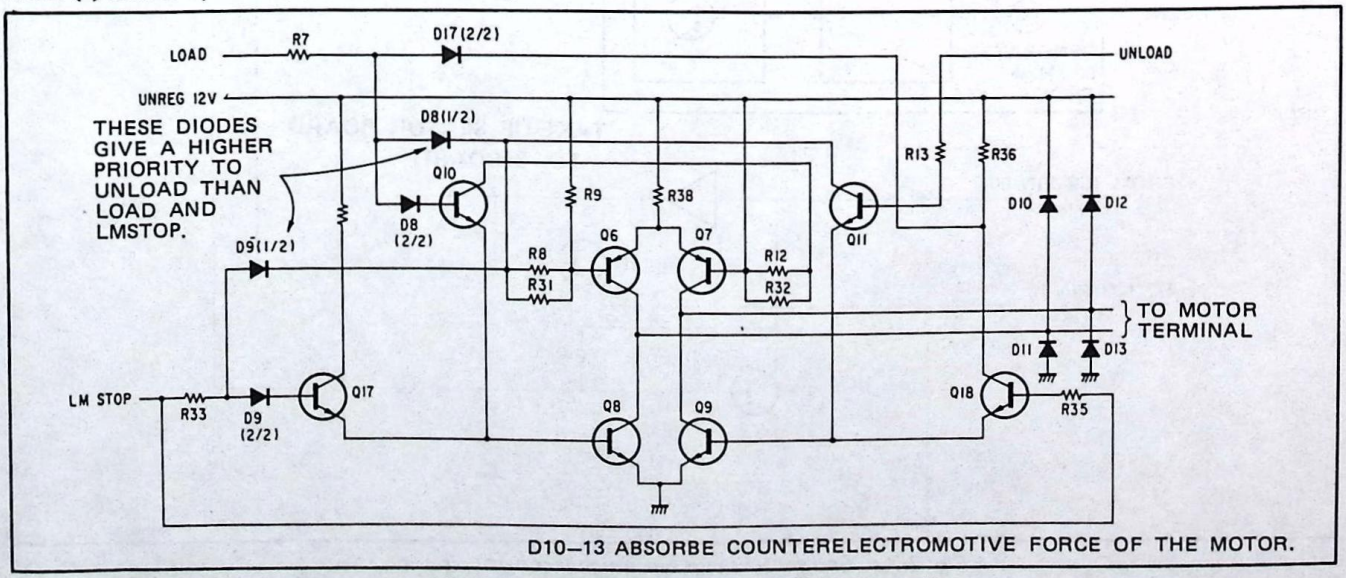

Fig. 2-6. Threading motor driver (MB-5 board)

The diodes D8, D9, D10-13, and D17 provide protection as follows

(1) LOAD, UNLOAD, and LM STOP are not generated simultaneously. If they are generated at a time, the diodes provide protection.

(2) They protect circuits when short-circuiting occurs in the motor.

(3) They absorb counterelectromotive force occurring in the motor.

Owing to D8-9 and D17, UNLOAD is given the highest priority, followed by LM STOP and LOAD. Namely, if three signals contend to go out at a time, one which has the highest priority takes precedence over the others.
Two simultaneous signals are also processed similarly.

2-7. SENSOR CIRCUITS

2-7-1. End Sensors and Sense Signal Control Circuit

Two end sensors are provided each at the supply side and the takeup side. The sensors are switched according to the direction of tape travel and only one is active to send the T END signal to the microcomputer at the end of tape.
The sensors are powered by 9 V and the signal goes through an open collector interface.
The TOP/$\overline{\text{END}}$ signal of IC2 pin 50 is L when the tape is traveling in the FWD direction, enabling output $\overline{\text{END}}$ of the S-sensor (Q20 is ready to operate). The signal is H when the tape is traveling in the REVERSE direction, enabling output $\overline{\text{TOP}}$ of the T-sensor (Q21 is ready to operate).
Bothe $\overline{\text{END}}$ and $\overline{\text{TOP}}$ are L when "sensing tape" is detected. At this time, the T END signal, which is H, goes to IC2 pin 10. As soon as T END is detected, emergency stop operation is performed (only on the S-side).

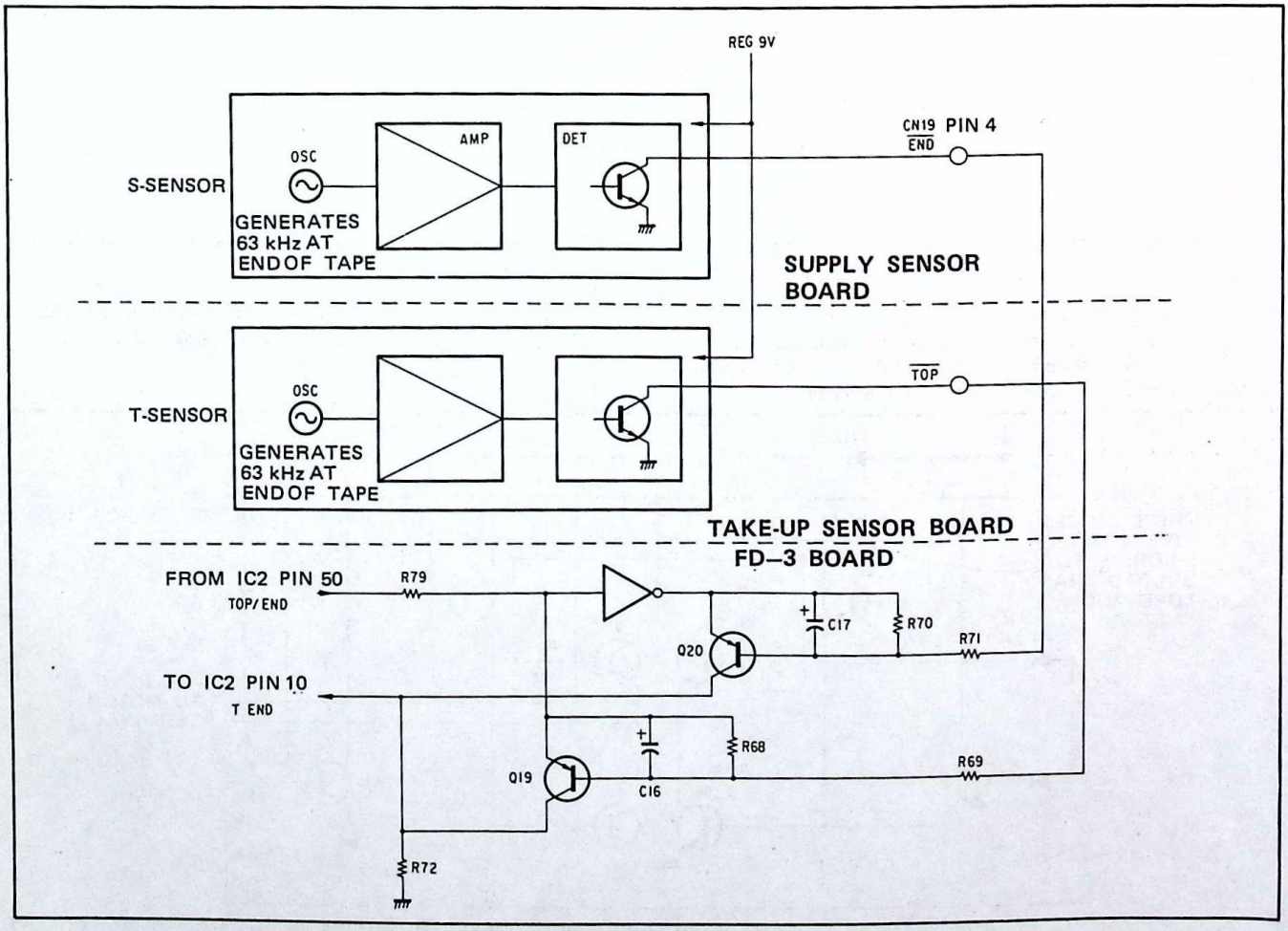

Fig. 2-7. End sensors and sense signal control circuit

2-7-2. Dew Sensor and Heater

Fig. 2-8 shows the characteristic curve of the dew sensor. Its resistance is a few kilohms normally but rises to more than 100 kilohms when condensation takes place.

Fig. 2-9 is the circuit diagram.

To pin 3 of IC2 (μPC 393G2), 0.5 V, divided by 120 kilohms, 560 kilohms, and 11 kilohms, applied. Since the resistance of the dew sensor is a few kilohms normally, pin 2 is at about 0.1 V and the comparator's output(1)is H. At this time, Q13 and Q14 are off and current is not flowing through the dew sensor. The DEW SENSE terminal is H and the CPU (FD-3 board, IC2 pin 18) gets information that condensation does not take place.

When condensation takes place, the resistance of the dew sensor rises to 10–100 kilohms and the voltage rises at pin 2. When the dew sensor resistance is about 50 kilohms, voltage is 0.5 V at pin 2 and the comparator output (pin 1) is L. Then the DEW SENSE terminal is L and the CPU (FD-3 board, IC2 pin 18) knows that condensation takes place, turns off the device, and lets" [💧] " blink on the LCD, while turning on the heater.

The heater does not work if the device is powered by the battery or AC pack. Power (12 V) is supplied to the heater only when the AC adaptor or TT unit is the power source. During battery-driven operation, the device is at STOP mode and the LCD continues to indicate the blinking mark for about an hour even after removal of condensation.

When condensation is present, pin 1 is L, Q13 and Q14 are on, and the heater operates (unless power is supplied from the battery or AC pack).

Preheating operation is performed as described below. The thermistor is a device whose resistance rises as the ambient temperature falls (see Fig. 2-8). To pin 6 of the comparator, 6 V is applied and, at normal temprature, pin 5 is lower than pin 6. Therefore pin 7 is L and the heater does not operate.

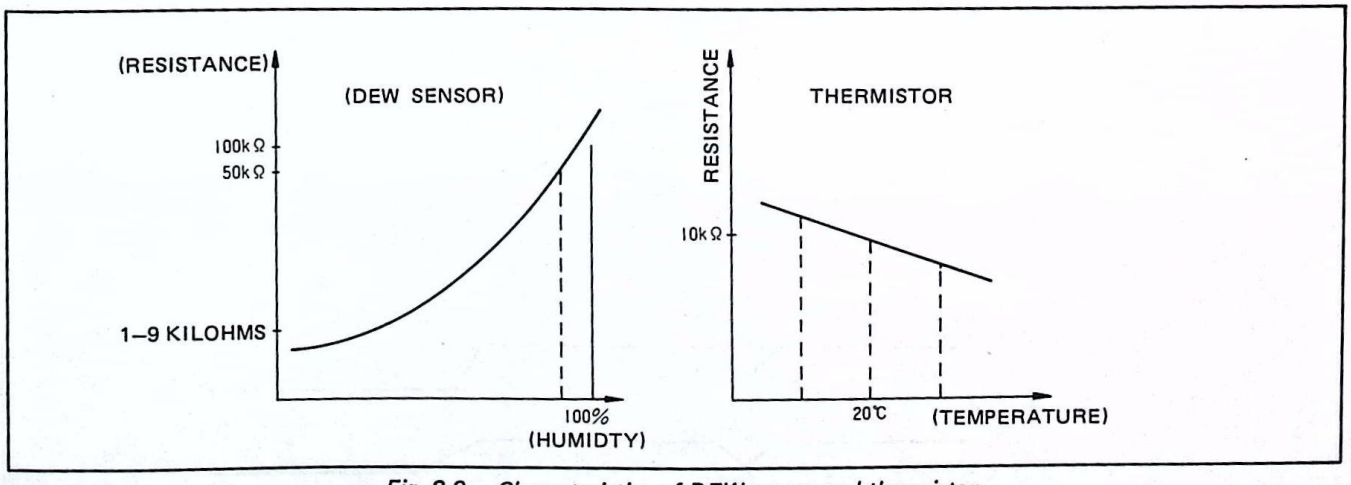

Fig. 2-8. Characteristics of DEW sensor and thermistor

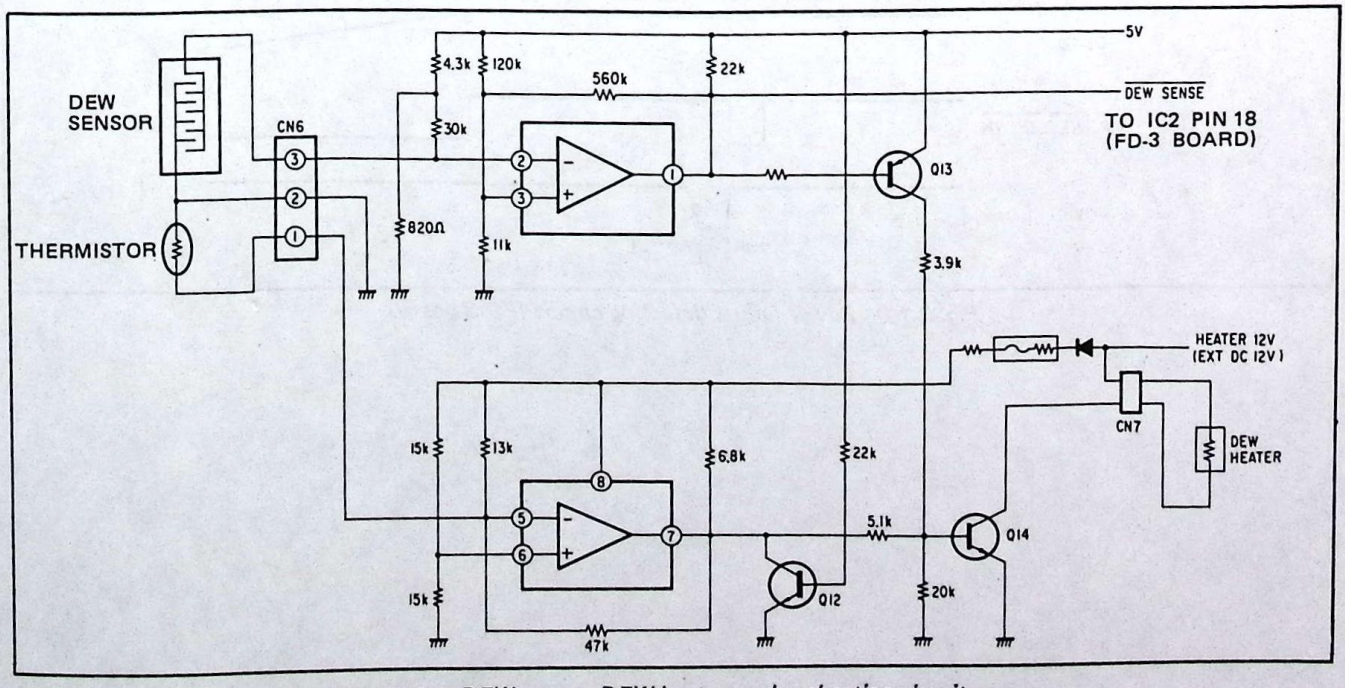

Fig. 2-9. DEW sensor, DEW heater, and preheating circuit

If the temperature falls below 15°C and pin 5 reses above 6 Vowing to the rise of the thermistor resistance, pin 7 turns to H. If the power switch of the SL-B5 is turned off at this time, Q12 is off and Q14 turns on and therefore the heater starts to perform preheating. When you turn on the power switch, Q12 goes on and the heater stops unless condensation is detected. If the power source is a battery, preheating operation is not performed to save battery power.

2-7-3. Power Failure Detecting Circuit

The state of power off and accidental power failure will be detected and, if it happens, the system control IC1 enters standby mode. If REG5V falls, pins 2 and 3 of IC6 also fall and $\overline{\text{POWER DOWN}}$ turns to L (see Fig. 2-10).

When power failure is removed, ordinary operation starts. When REG5V restores the normal level, $\overline{\text{POWER DOWN}}$ becomes H and POWER ON also turns to H after a fixed time T.

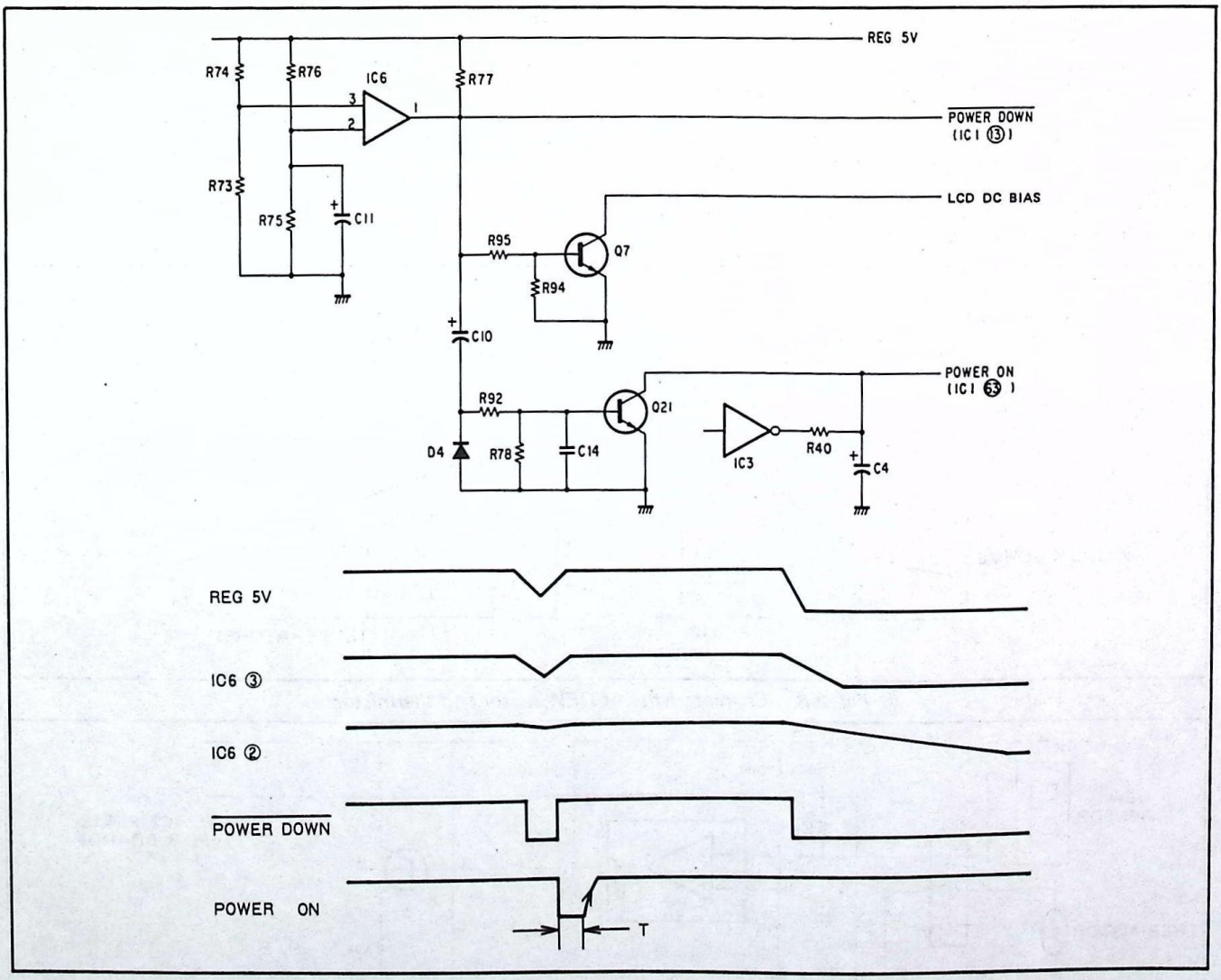

Fig. 2-10. Power failure detecting circuit (FD-3 board)

2-8. OTHER CIRCUITS

2-8-1. Clock Generator and Its Control

Fig. 2-13 shows the clock generator.
When power is off, IC1 is standby mode in order to back up the CTL counter for some duration, namely, to keep the contents of the CTL counter unchanged.
In the standby mode, the clock stops and the counter contents are kept while power consumption is reduced to 1/100 or less of ordinary operating mode.
The clock generator is controlled to enter and get out of standby mode.

The clock works when IC3 (13) is L. The signals that control the clock are as follows.

RESET . . . . . Turns on the clock generator so that the device should not fail to enter standby mode.

$\overline{\text{POWER SW}}$ . . . Releases standby mode (during power-on) or puts it in standby mode (during power-off).

WAKEUP . . . . . Releases standby mode (during power-on) from T/T connector.

REG5V . . . . . Keeps the clock to oscillate.

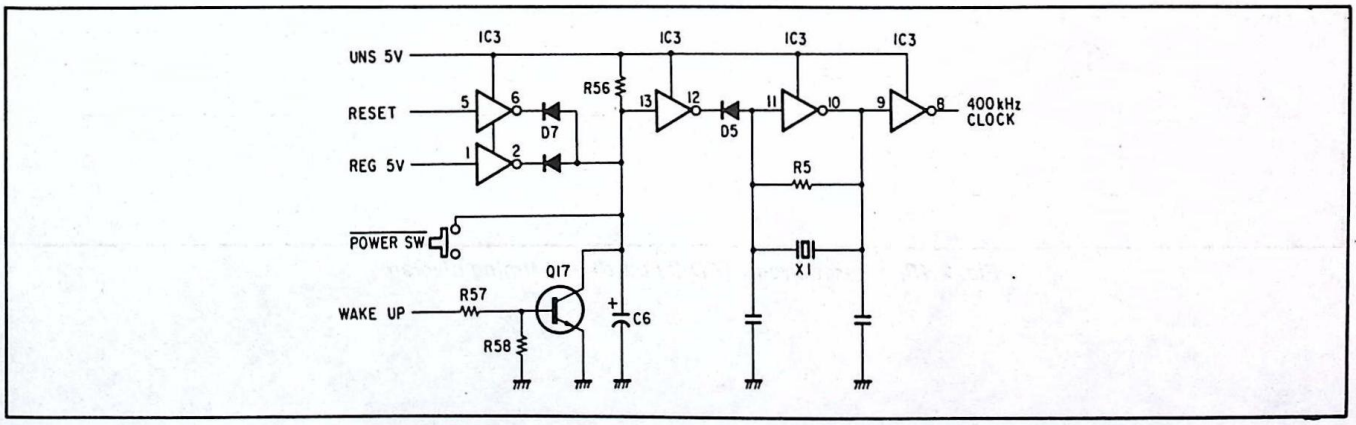

Fig. 2-11. Clock generator

2-8-2. Buzzer Circuit

A small buzzwer having a winding is used. Fig. 2-12 shows the buzzer circuit and the waveforms of oscillation.

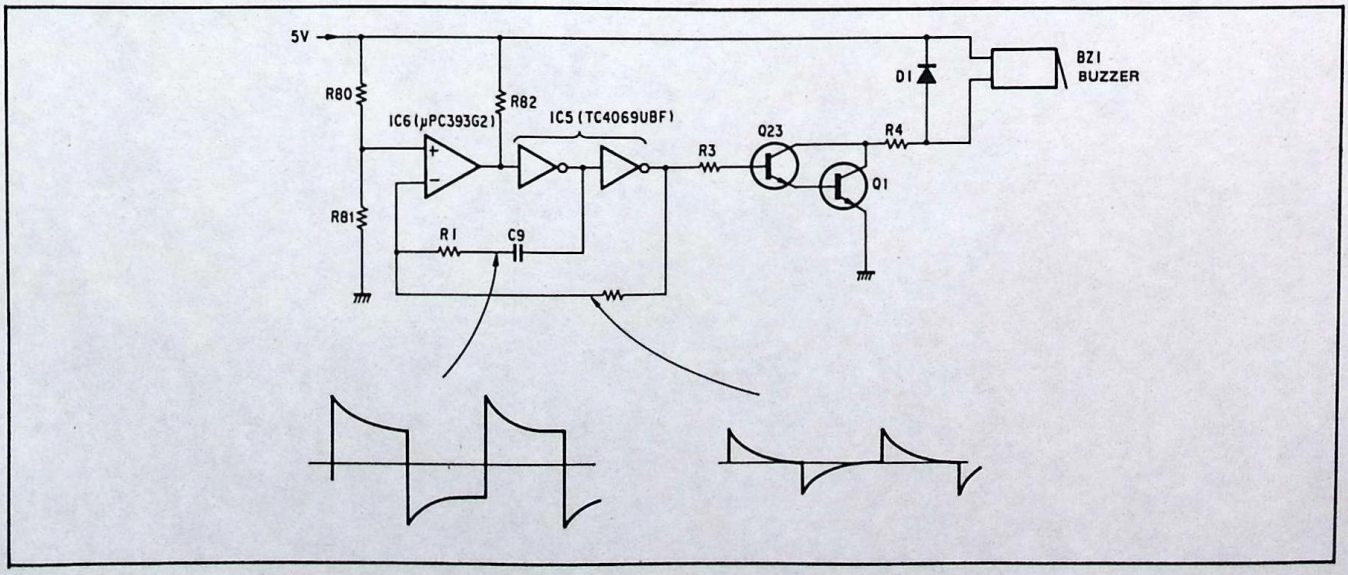

Fig. 2-12. Buzzer circuit (FD-3 board) and waveforms of oscillation

2-8-3. Initial Reset Circuit

Fig. 2-13 shows the initial reset circuit and timing diagram.
The IC1 reset circuit, powered by UNS 5 V, generates a reset signal when BUP 5 V is below 3 V during battery-powered operation and when power goes on with the AC adaptor or T/T unit is used.

When the reset signal which has come out IS fed back via C12 and Q22 so that IC4 pin 2 stays at L for a certain time and reset operation should not fail

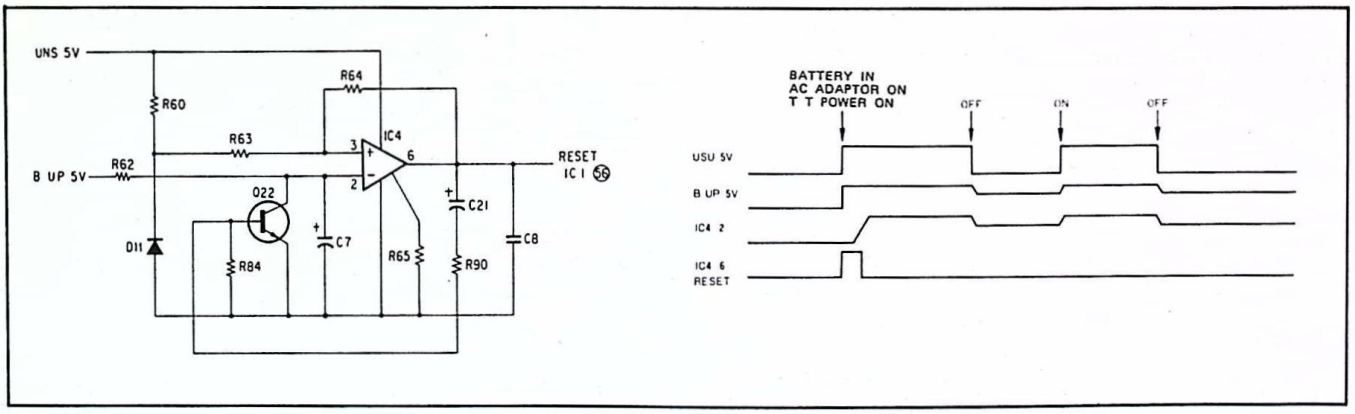

Fig. 2-13. Reset circuit (FD-3 board) and timing diagram

2-8-4. Liquid Crystal Display Panel (LCD-1)

The LDSs are controlled by signals given from IC1 (CPU1) of the FD-3 board.
The LCD drive signals include common signals (COMO-2) and segment drive signals (SO-23).

The LCDs are driven dynamically, divided in three groups.
Fig. 2-14 shows the connections between LCD-1 and IC1 and between LCD elements and common lines.

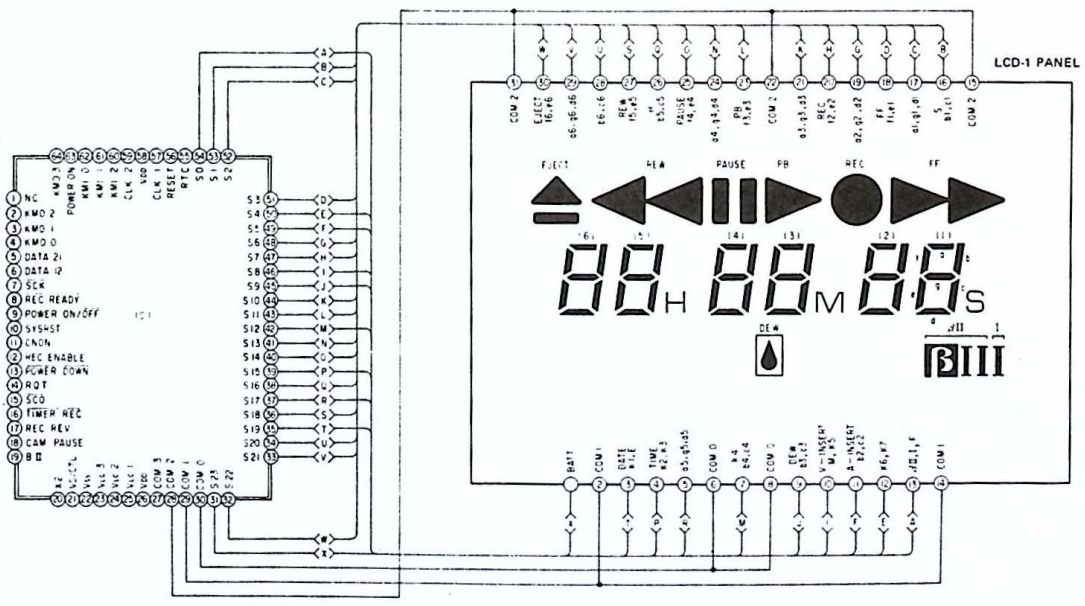

COMMON \ LCD-1 PIN NO.	1	3	4	5	7	9	10	11	12	13	16	17
COM 2	—	DATE	TIME	a5	b4	b3	M	b2	—	β II	b1	a1
COM 1	BATT	K1	K2	g5	c4	c3	INS REC	c2	K7	I	c1	g1
COM 0	LOCK	E	K3	d5	K4	DEW	K5	DUB	K6	F	S	d1

COMMON \ LCD-1 PIN NO.	18	19	20	21	23	24	25	26	27	28	29	30
COM 2	FF	a2	REC	a3	PB	a4	PAUSE	b5	REW	b6	a6	—
COM 1	f1	g2	f2	g3	f3	g4	f4	c5	f5	c6	g6	BATT
COM 0	e1	d2	e2	d3	e3	d4	e4	H	e5	—	d6	LOCK

Fig. 2-14. Connections between LCD-1 and IC1 and between LCD elementsa and common lines

2-8-5. Insert Function

The insert function is the feature that enables to superpose signals on a designated part of tape. Transition of states is shown below (V-INSERT means the mode to insert video signals alone, A-V-INSERT both video and audio signals, and A-INSERT audio signals).

7-3. SERVO CIRCUITS

3-1. General

The capstan and drum servo circuits are mounted on the SV-11, SD-1, and SP-1 boards, and the reel servo circuit on the RM-9 and RS-1 boards. The adjusting variable resistors and driver circuits are on the MA-6 board.
Fig. 3-1 is a block diagram of the servo circuits.

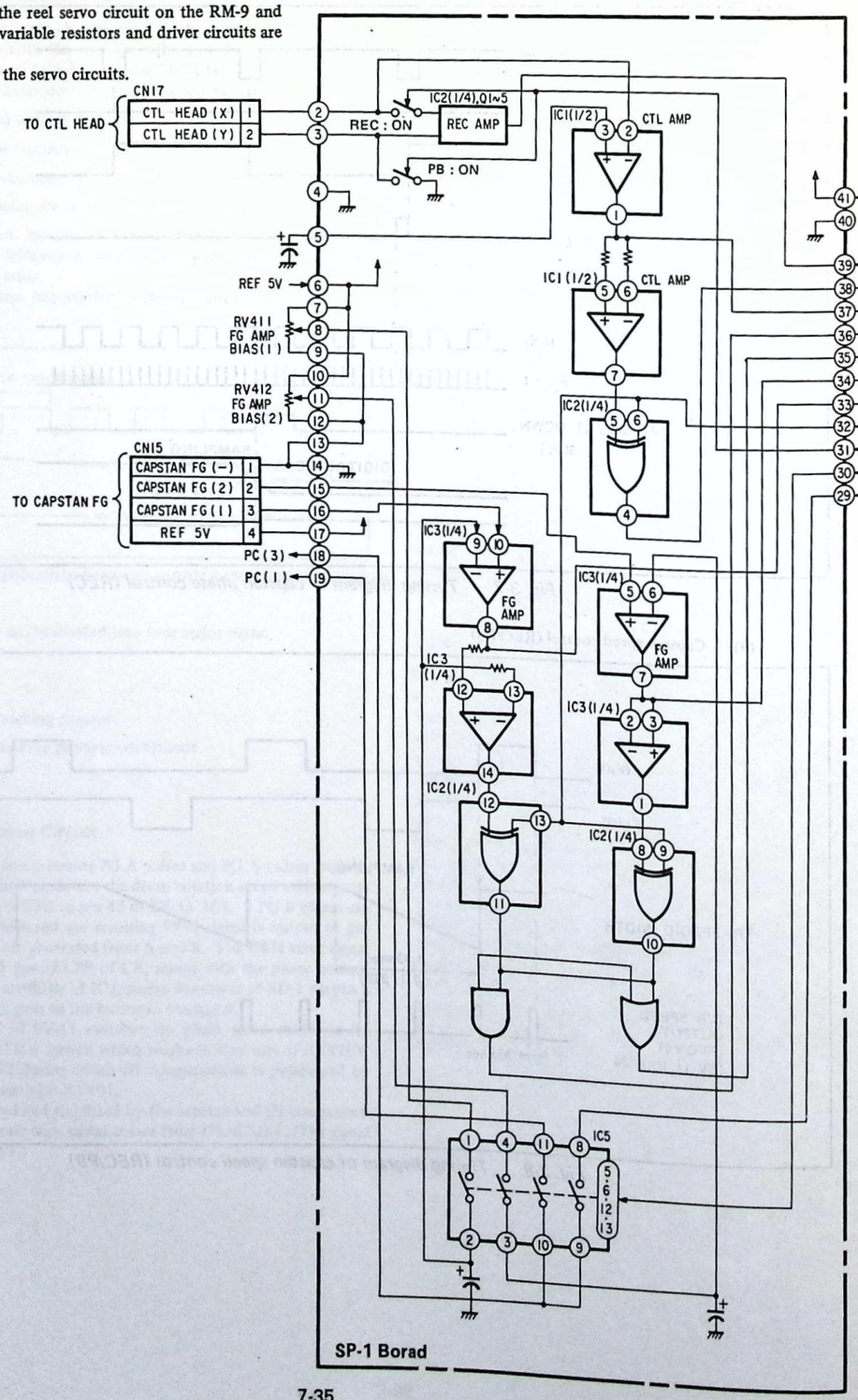

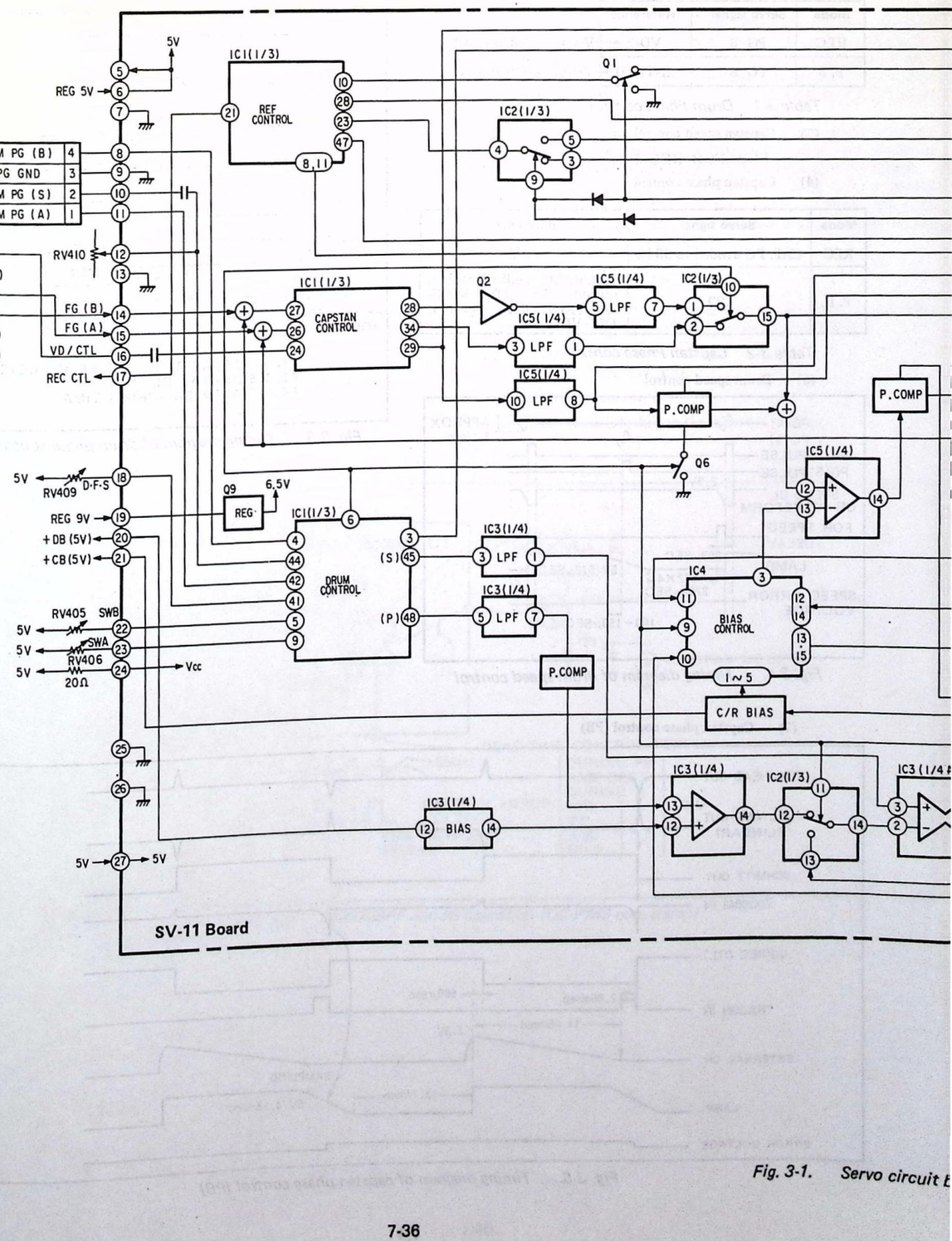

Fig. 3-1. Servo circuit B

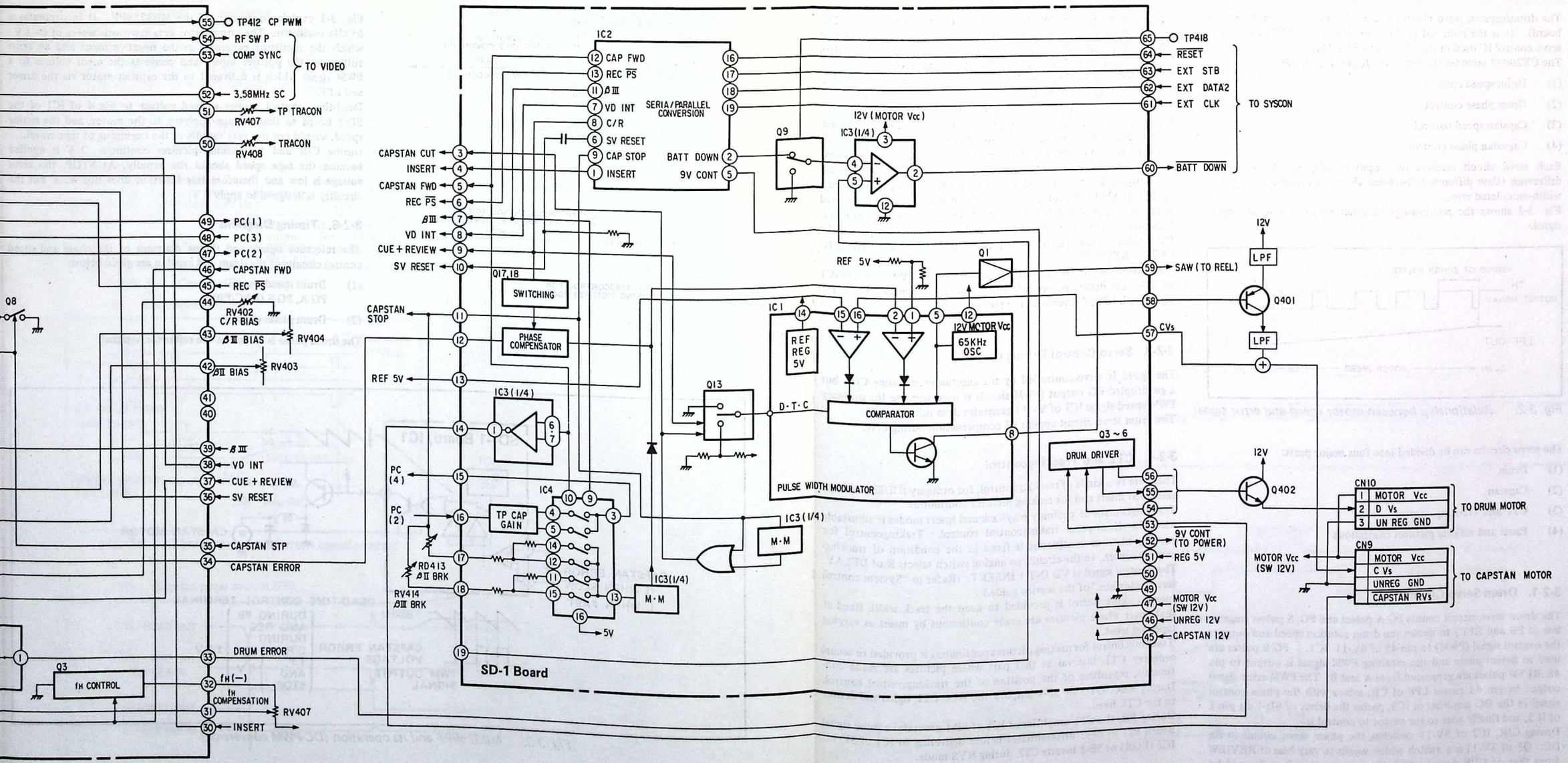

lock diagram

3-2. Capstan/Drum Servo Circuits

The drum/capstan servo circuits use a CX20049 (IC1 on the SV-11 board). It is the mini flat package version of the CX194B (digital servo control IC used in the SL-F1 and SL-F11).
The CX20049 includes the following four servo circuits.

(1) Drum speed control

(2) Drum phase control

(3) Capstan speed control

(4) Capastan phase control

Each servo circuit receives two input signals, obtains the phase difference (time difference) between them, and outputs the pulse-width-modulated error.
Fig. 3-2 shows the relationship between motor speed and error signal.

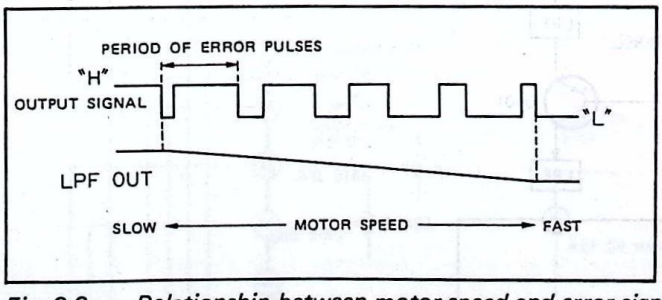

Fig. 3-2. Relationship between motor speed and error signal

The servo circuits can be divided into four major parts:

(1) Drum

(2) Capstan

(3) CTL and Tracking control

(4) Pause and making pictures continuous

3-2-1. Drum Servo Circuit

The drum servo circuit counts PG.A pulses and PG. S pulses (regardless of PB and REC) to detect the drum rotation speed and outputs the control signal (PWM) to pin 45 of SV-11 IC1. PG.B pulses are used to detect phase and the resulting PWM signal is output to pin 48. RFSW pulses are generated from A and B. The PWM error signal output to pin 45 passes LPF of CR, mixes with the phase control signal in the DC amplifier of IC3, passes the driver of SD-1 via pin 1 of IC3, and finally goes to the motor to control it.
Druing C/R, IC2 of SV-11 switches the phase servo circuit to fix DC. Q3 of SV-11 is a switch which works to vary bias of REVIEW from that of CUE during which fH compensation is performed by adding a DC voltage with RV401.
Tape speed is fixed and stabilized by the capstan and fH compensation is fixed. A drum stop signal comes from D9 of SD-1. (The signal name is SV RESET.)

3-2-2. Capstan Servo Circuit

The capstan servo circuit detects the times of (1) and (2) of FG. The small output of FG is routed through the amplifier of IC3 of SP-1 which converts the signal to pulses. The pulse signal then passes an Exclusive OR gate of IC2 of SP-1 and AND and OR gates of diodes so that phase can be detected in the same way regardless of the direction of rotation.
IC1 of SV-11 counts the time during which the decaying edge of a pulse passes from pin 17 to pin 18 and outputs a speed error signal. During recording, the circuit counts down FG and uses it in the place of the CTL signal to servo-control the phase. During playback, it uses the CTL signal coming via pin 16 to detect the phase and outputs a PWM error signal. The PWM error signal generated by IC1 of SV-11 is routed through LPF of IC5 of SV-11 and mixed with the speed signal before being delivered to an OP amplifier. Bias and gain are determined by changing an negative input of the OP amplifier according to mode β II/III, β II CUE, REVIEW, β III CUE, or REVIEW).
The output of the OP amplifier is converted to a PWM signal in IC1 of SD-1 for higher power efficiency and, after converted to a DC signal with LPF, delivered to the motor.

3-2-3. Servo Control During C/R

The speed is servo-controlled by the capstan even during C/R, but a guadrupled FG output (PWM signal) is used because the ordinary PWM speed signal IC1 of SV-11 generates does not serve.
The drum servo circuit applies fH compensation during C/R.

3-2-4. CTL and Trackingcontrol

There are two kinds of trackingcontrol, for ordinary β II/III playback and video insert and for making pictures continuous.
Trackingcontrol of ordinary playback and insert modes is adjustable with the front-panel trakingcontrol control. Trakingcontrol for making pictures continuous is fixed in the condition of tracking-control center. In the circuit, an analog switch selects R of DELAY. The control signal is VD INT + INSERT. (Refer to "System control servo interface" of the service guide.)
Insert trakingcontrol is provided to keep the track width fixed at that part where pictures are made continuous by insert as varying tapes are used.
Trackingcontrol for making pictures continuous is provided to secure ordinary CTL interval at that part where pictures are made continuous, regardless of the position of the trackingcontrol control. During REC, Q1-5 of SP-1 amplify the REC CTL signal and deliver to the CTL head.
During PB, the CTL amplifier of IC1 of SP-1 generates a pulse signal which IC2 of SP-1 differentiates before delivering to IC1 of SV-11. IC2 (EOR) of SP-1 inverts CTL during RVS mode.

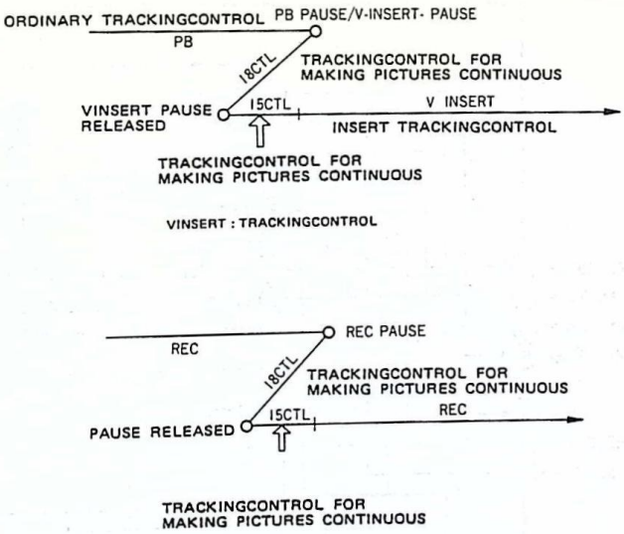

3-2-5. IC1 (MB3759PF) of SD-1

Fig. 3-3 explains operation of the MB3759PF. It incorporates a 65 kHz oscillator. The comparator gets sawtooth waves of 0–3 V which the oscillator generates as the negative input and an error voltage as the positive input, and converts the error voltage to a PWM signal which is delivered to the capstan motor via the driver and LPF.

Dead-time control applies a fixed voltage to pin 4 of IC1 of the SD-1 board so that voltage applying to the motor, and the motor speed, should not rise very rapidly at the beginning of tape travel. During C/R and for making pictures continous, 0 V is applied because the tape speed should rise rapidly. At STOP, the error voltage is low and therefore this function does not work but the circuitry is designed to apply 0 V.

3-2-6. Timing Diagrams

The reference signals and timing diagrams of the phase and speed control circuits of the drum and capstan are given below.

(1) Drum speed control
PG A, PG S (REC/PB)

(2) Drum phase control

The drum phase is locked to the reference V-signal.

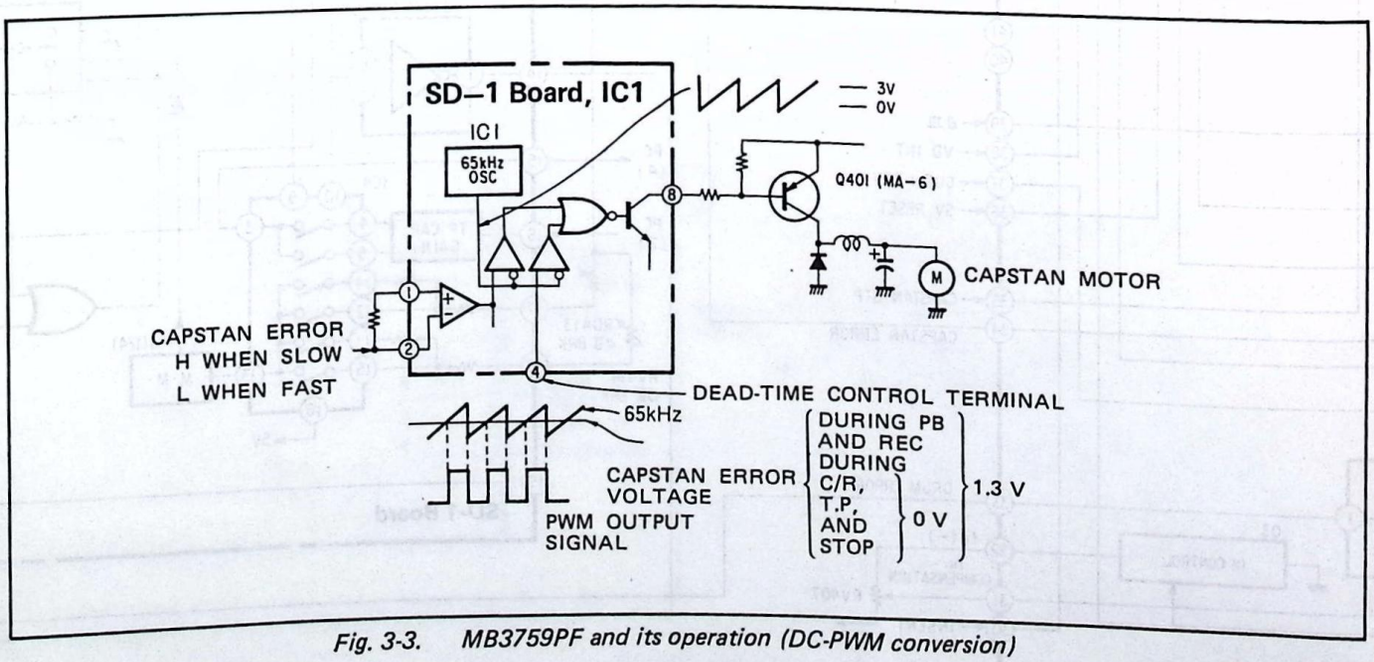

Fig. 3-3. MB3759PF and its operation (DC-PWM conversion)

Mode	Servo signal	Reference	
REC	PG B	VD/2	← V-sync of video signal
P. B	PG B	INT. VD	← VD/20f internal X'tal

Table 3-1 Drum Phase control

(3) Capstan speed control

FGA, FGB(REC/PB)

(4) Capstan phase control

Mode	Servo signal	Reference
REC	CAP. FG divided to 30 Hz	VD/2
P. B	CTL	Monostable multivibrator is output for TRACKING-CONTROL (delay signal of INT. VD)

Table 3-2 Capstan Phase control

(5) Drum speed control

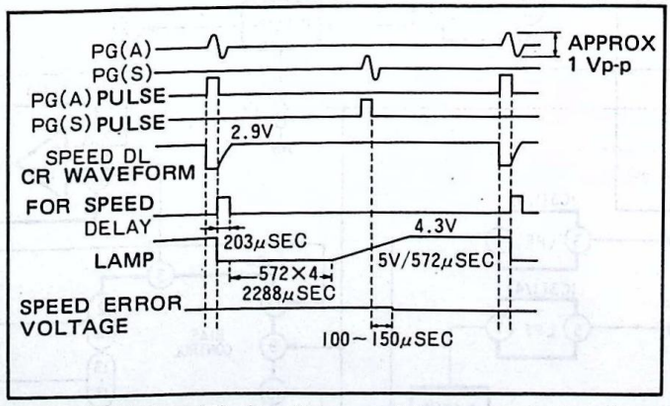

Fig. 3-4. Timing diagram of drum speed control

(6) Drum phase control

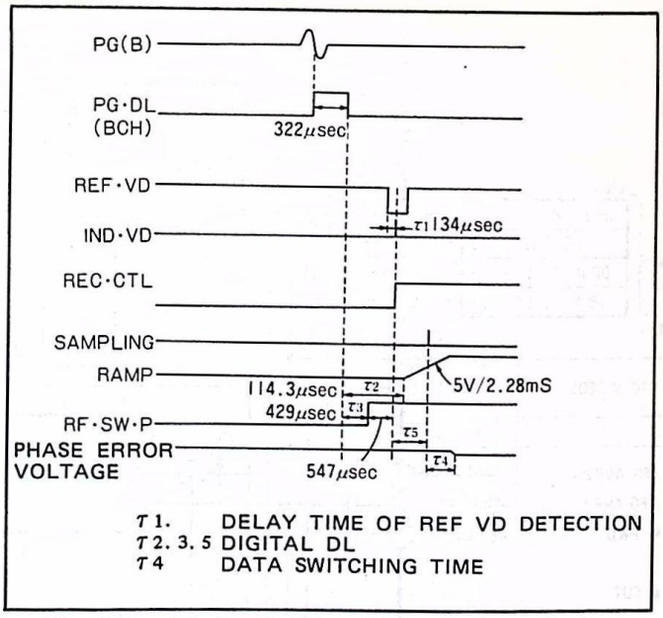

Fig. 3-5. Timing diagram of drum phase control

(7) Capstan phase control (PB)

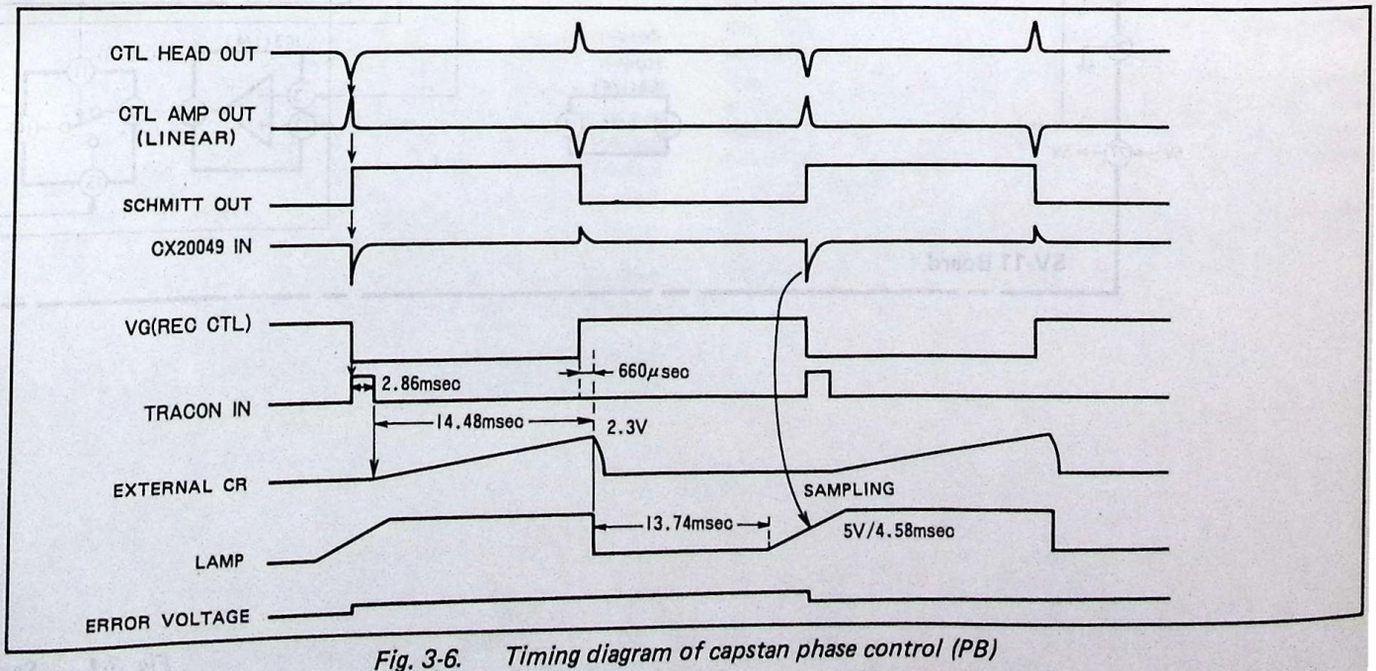

Fig. 3-6. Timing diagram of capstan phase control (PB)

(8) Capstan phase contorl (REC)

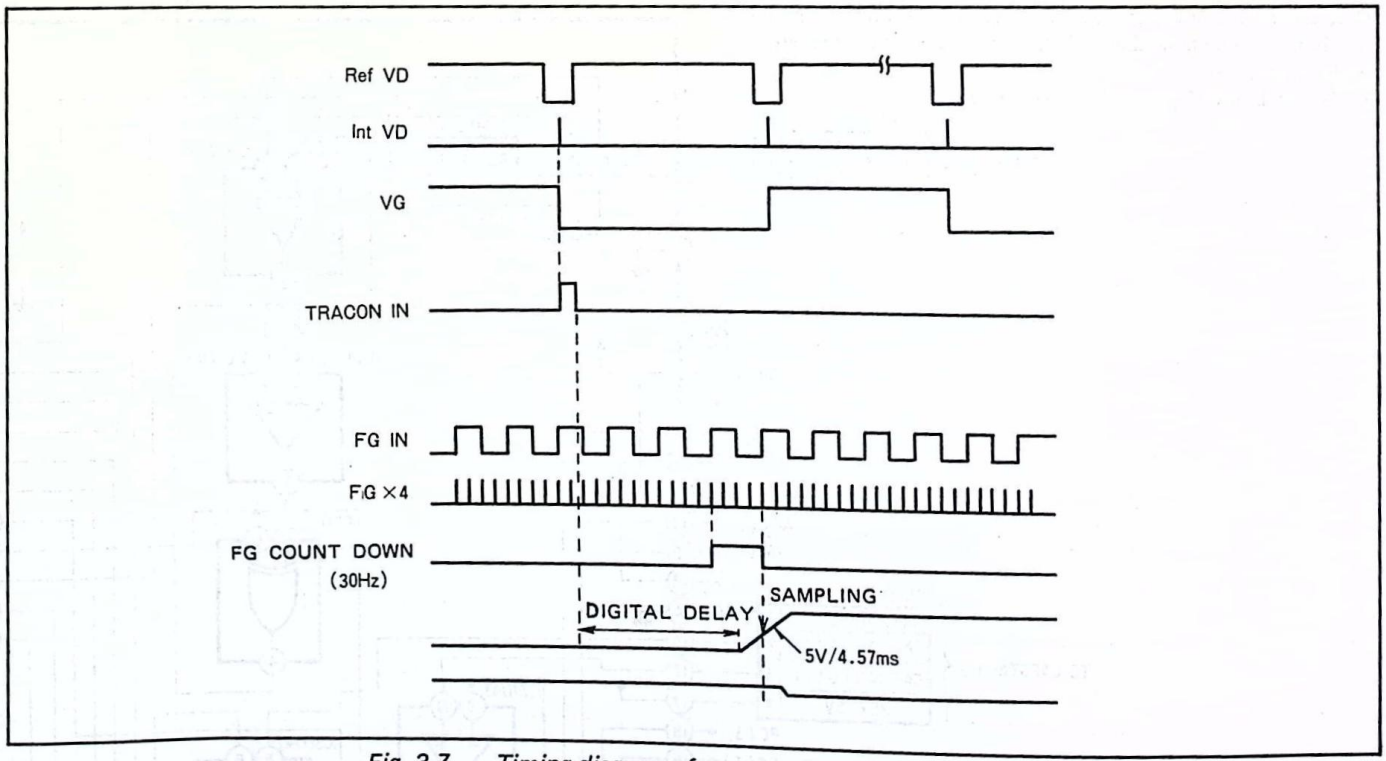

Fig. 3-7. Timing diagram of capstan phase control (REC)

(9) Capstan speed control (REC/PB)

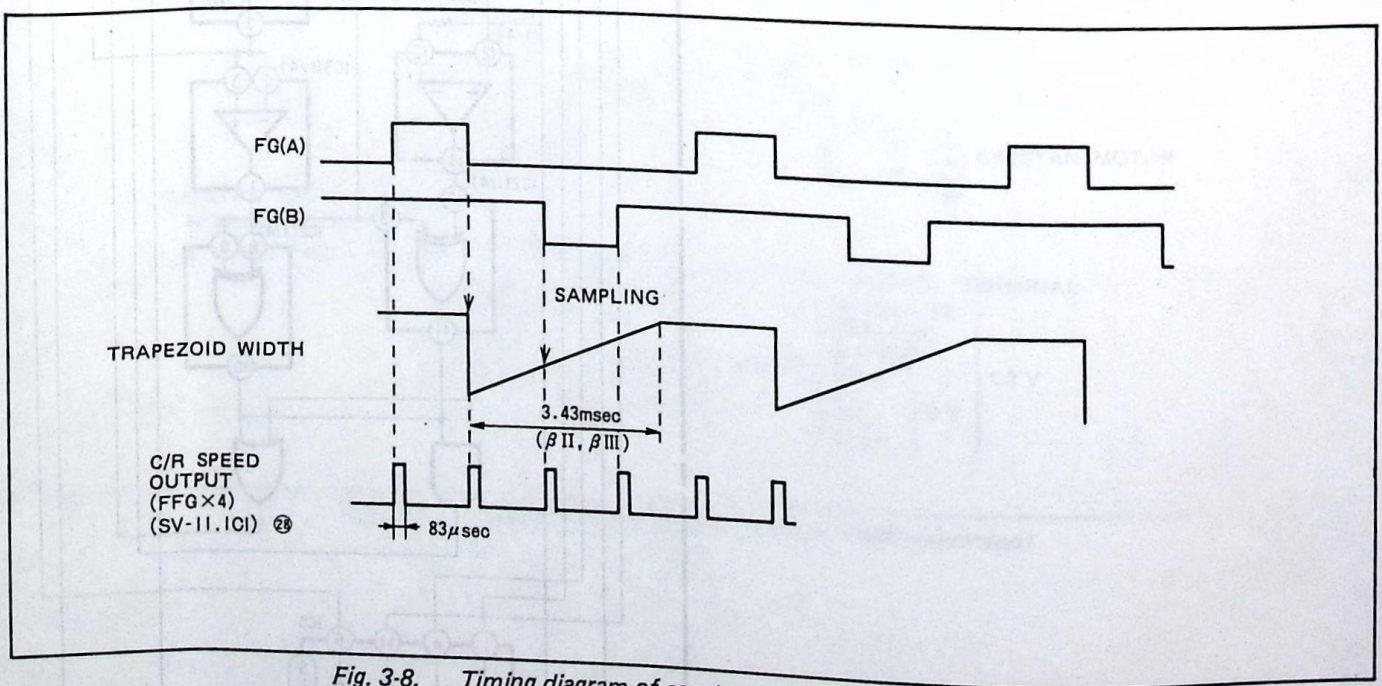

Fig. 3-8. Timing diagram of capstan speed control (REC/PB)

3-2-7. TC4030BF

Operation of IC2 (TC4030BF) mounted on the SP-1 board is described below. Fig. 3-9 provides the circuit diagram and logic chart. The output is L only when two inputs are egual.

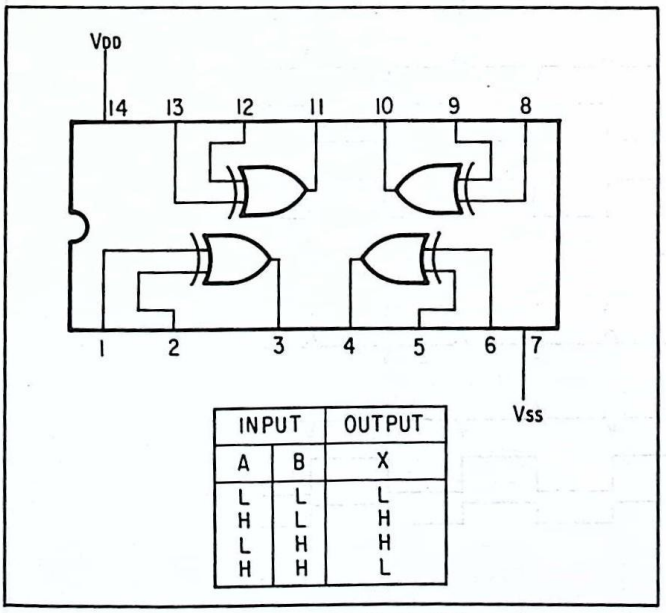

INPUT		OUTPUT
A	B	X
L	L	L
H	L	H
L	H	H
H	H	L

Fig. 3-9. SP-1 board IC2 (TC4030BF)

3-2-8. Timing Diagram of PG-A, PG-B, and PG-S

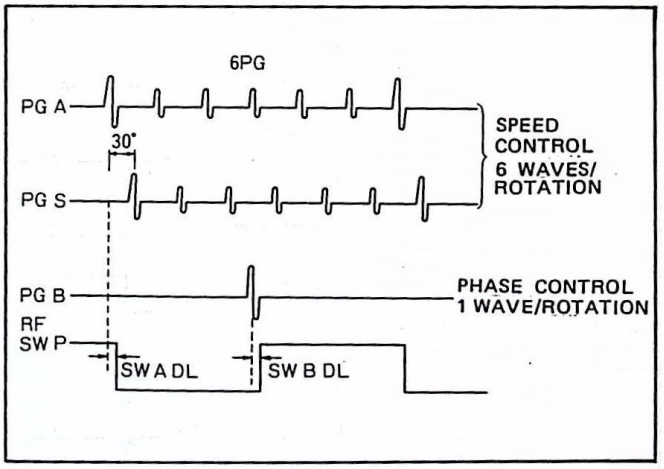

Fig. 3-10.

3-2-9. Timing Diagram of the FG Circuit

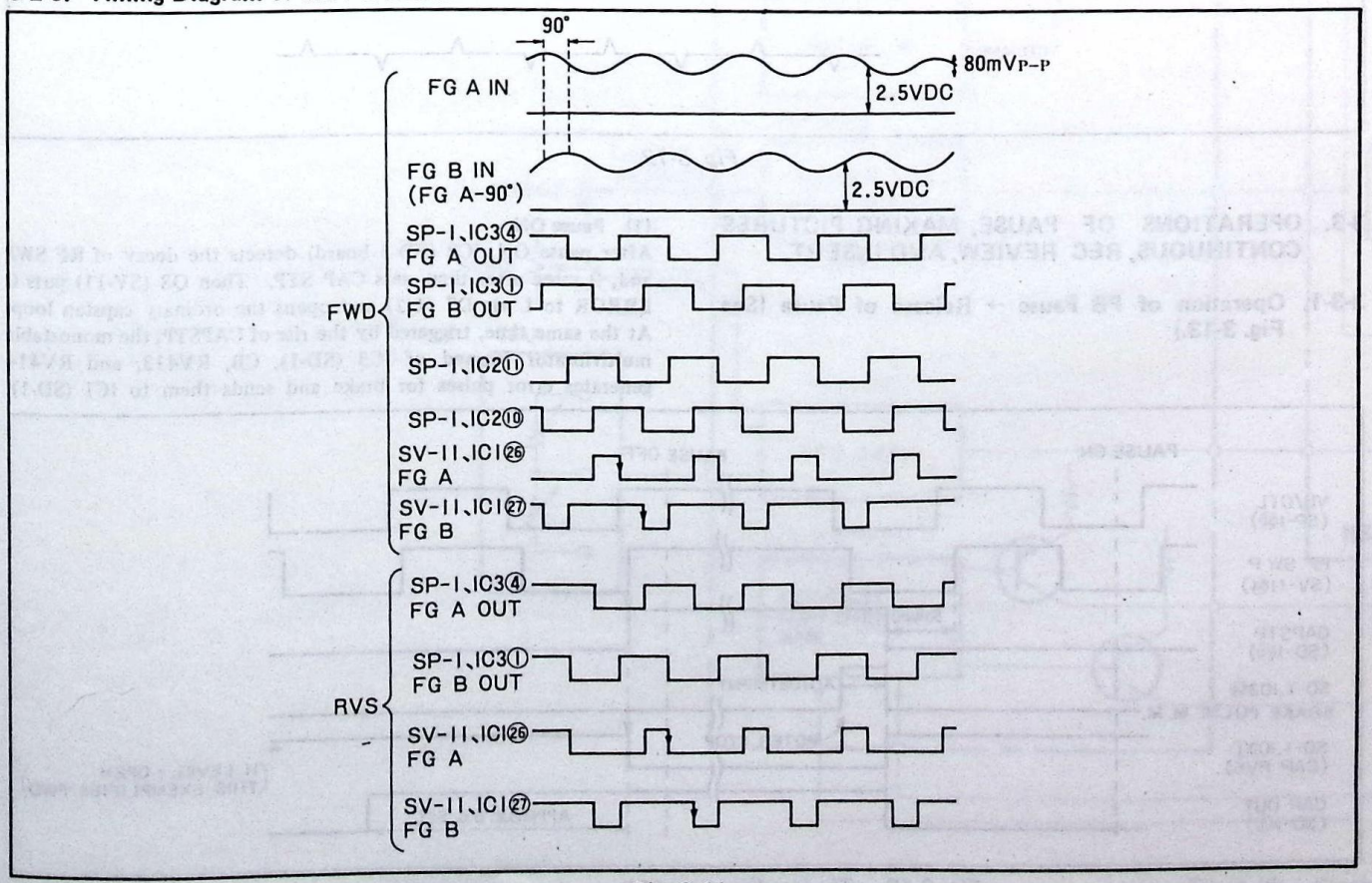

Fig. 3-11.

3-2-10. Timing Diagrams of the SP-1 Board's CTL Circuit and CTL-RF SW P

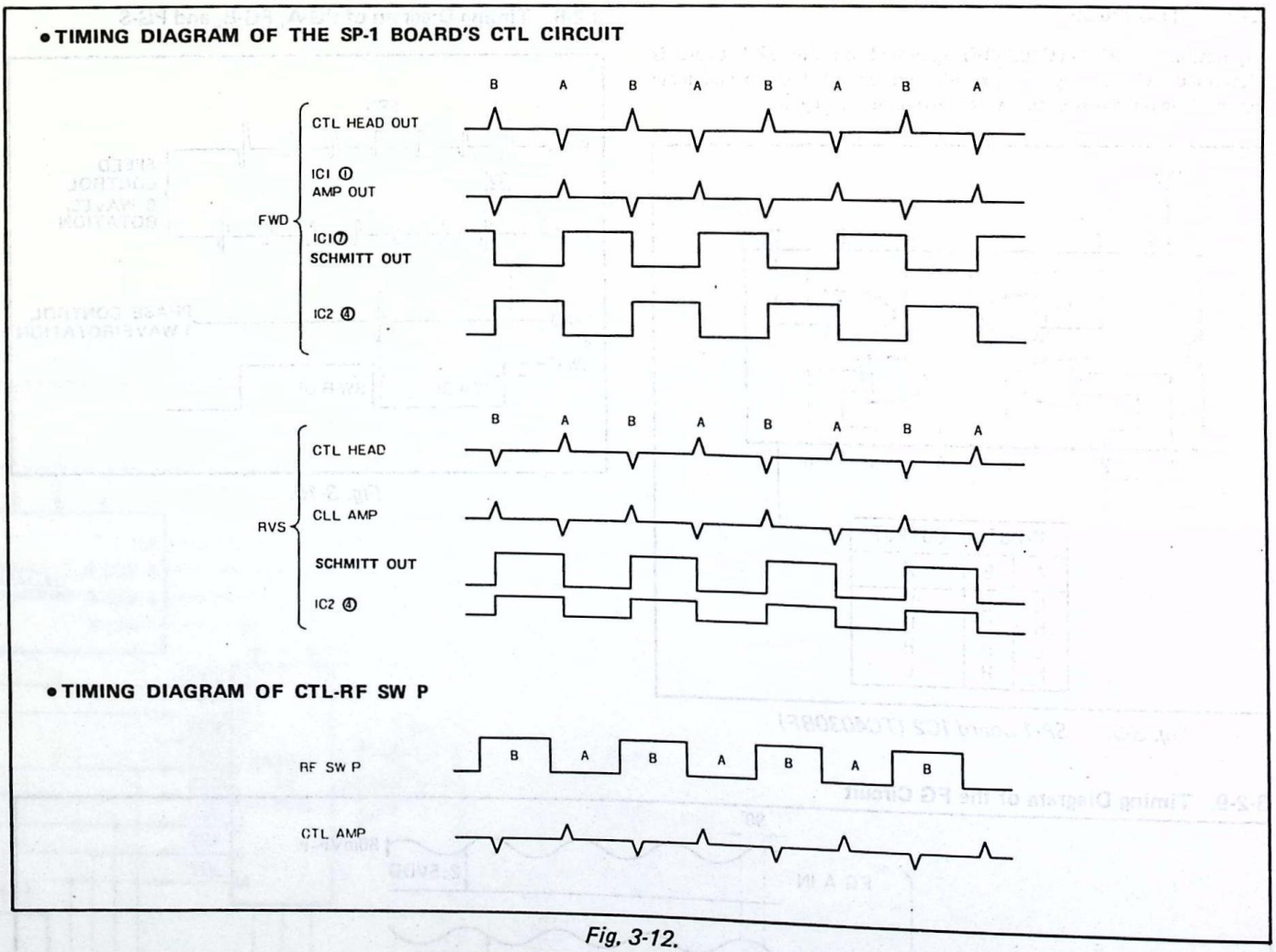

Fig. 3-12.

3-3. OPERATIONS OF PAUSE, MAKING PICTURES CONTINUOUS, REC REVIEW, AND INSERT

3-3-1. Operation of PB Pause → Release of Pause (See Fig. 3-13.)

(1) Pause ON

After pause ON, IC2 (FD-3 board) detects the decay of RF SWP and, 9 msec after then, sets CAP STP. Then Q8 (SV-11) puts C ERROR to L via D7 (1/2) and opens the ordinary capstan loop. At the same time, triggered by the rise of CAPSTP, the monostable multivibrator formed of IC3 (SD-1), CB, RV413, and RV414 generates error pulses for brake and sends them to IC1 (SD-1).

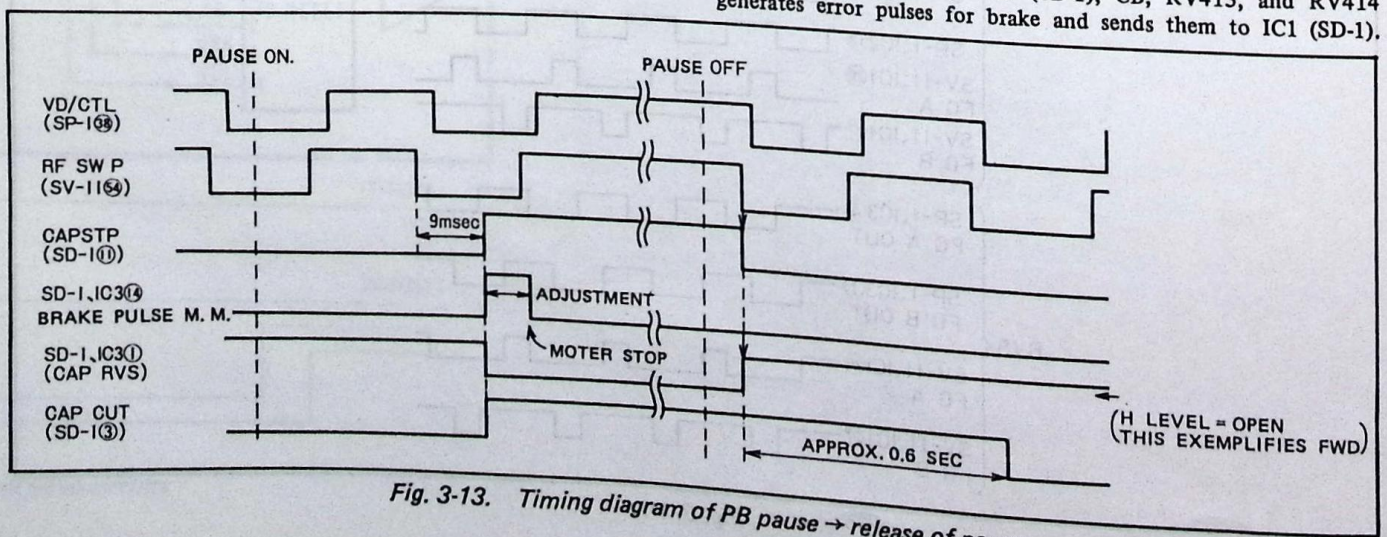

Fig. 3-13. Timing diagram of PB pause → release of pause

The direction of rotation of the capstan motor is reversed by CAPRVS so that brake be applied according to brake pulse. The motor stops at the decay of the brake pulse. The delay of 9 msec between the detection of decay of RF SWP and the rise of CAP STP is provided to take noises out of the screen.
CAP CUT puts pin 4 of IC1 (dead-time control: see 3-2-5) to L via Q13 (SD-1) and controls IC5 (SP-1) and analog SW to release pause. R71, D10, and R72 of SD-1 provides a bias to C15 and C16 which performs speed compensation of phase control during pause (CAP STP : H). This prevents delay of the start of the motor rotation owing to the time constant of the capacitor at the time of release from pause.

(2) Pause OFF

At the time of release from pause, CAP STP is put to L at the decay of RF SWP. CAP RVS is controlled to indicate the direction of rotation of the motor which should so operate after release from pause (L: REVERSE, OPEN: FWD). CAP CUT decays approximately 0.6 sec after the dacay of CAP STP. (C9, R45, R46, Q16, and Q15 of SD-1). During this time, IC5 (SP-1) and analog SW are operated and the circuits are formed as follows. The purpose is to let capstan servo operate to lock phase immediately after release from pause.

- **FG AMP BIAS circuit (cut by capacitor → division by resistors)**

The voltage applying to the capacitor would vary with the position where the motor stops and, after release from pause, the REF voltage of the next-stage Schmitt circuit would vary owing to the time constant of the capacitor. A capacitor is used to prevent this.

- **Varying gain for phase control**

This circuit is provided for immediate capstan phase lock after release from pause specifically when making pictures continuous. The circuit is mounted on the SV-11, SD-1, and SP-1 boards (see Fig. 3-14).
Normally R39, R40, R41, and C15 perform phase compensation in phase control. On release from pause, an analog SW of SP-1 turns on for approximately 0.6 sec according to signal CAP CUT and the gain of the phase control circuit rises.

(3) Function to vary STILL noise position

STILL noise position depends on the length over which the tape advances before it stops after CTL passed. Since the tape advances almost at a fixed rate even when brake is being applied, the noise position depends on the time elapsed after CTL until the tape stops. The time between RF SWP and the decay of brake pulse is fixed and therefore the time between CTL and stop of the tape, and noise position as well, can be varied with trackingcontrol VR.

3-3-2. Making Pictures Continuous (REC PAUSE → Release from (PAUSE)

(1) REC pause ON → 18CTL rewinding → standby

The tape stops for 0.3 second after pause ON before it gets rewound for 18CTL and then stands by. The tape is forced to stop in the same way as on PB pause. In that part of 18CTL, capstan and drum servo contorl is in PB mode but RFF30Hz (VD/2) uses external VD. During this time, TP trackingcontrol is performed.

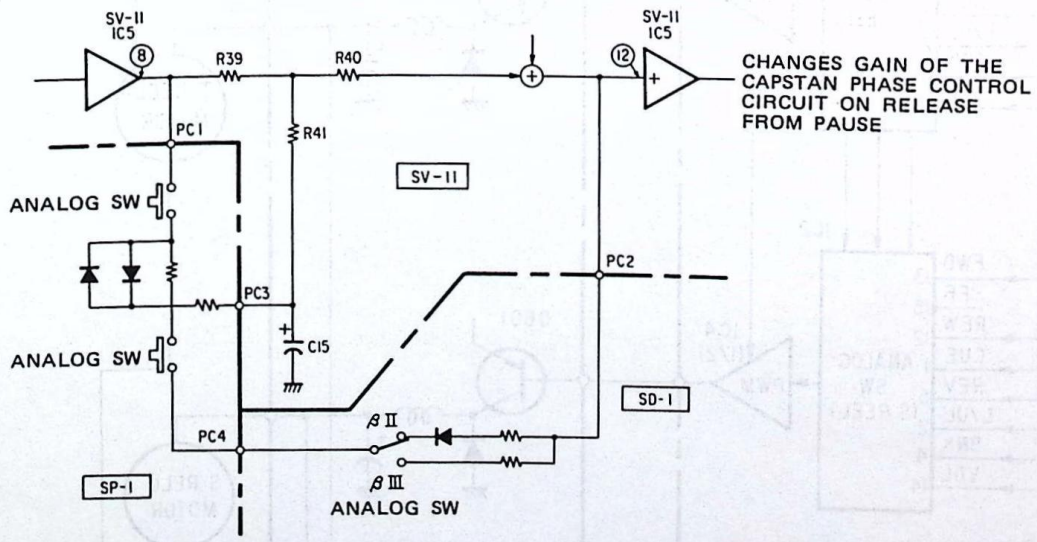

Note: PC1–4 are the names of pins of the board.

Fig. 3-14.

(2) Release from pause → 15CTL PB → REC

For 15CTL after release from pause, PB mode continues with external VD being REF30Hz. After then, ordinary REC mode is entered. Operation of the capstan loop is the same as release from PB pause. During 15CTL, PB, TP trackingcontrol is performed as a result, the capstan locks to external VD in the interval of permitting to make pictures continuous.
(Recording overlaps for 3 CTL at the joint.)

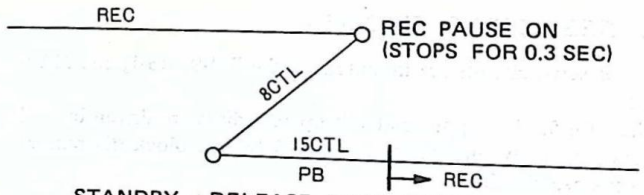

STANDBY → RELEASE FROM PAUSE

TAPE TRAVEL WHEN MAKING PICTURES CONTINUOUS

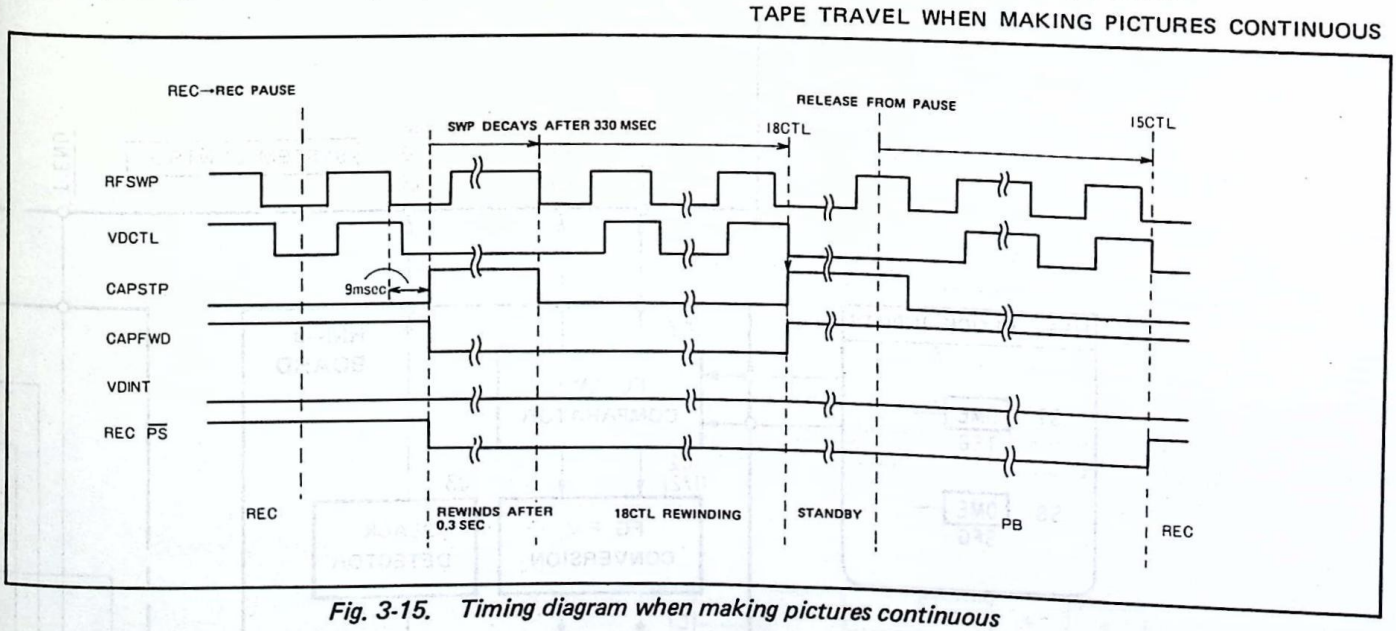

Fig. 3-15. Timing diagram when making pictures continuous

3-3-3. REC Review

When REC pause mode changes to REC review mode, RVS playback is performed for 78CTL, followed by pause mode continuing for 0.3 sec, then playback mode continues for 93CTL. During this time, RVS and FWD playback is ordinary playback mode, REF is internal VD, and ordinary trackingcontrol is performed.
After then, the device remains at a stop for 0.3 sec before rewinding the tape for 18CTL. The subsequent operation is the same as that of making continuous pictures but that an overlapping part extends for 6CTL at the joint after REC review performed once.

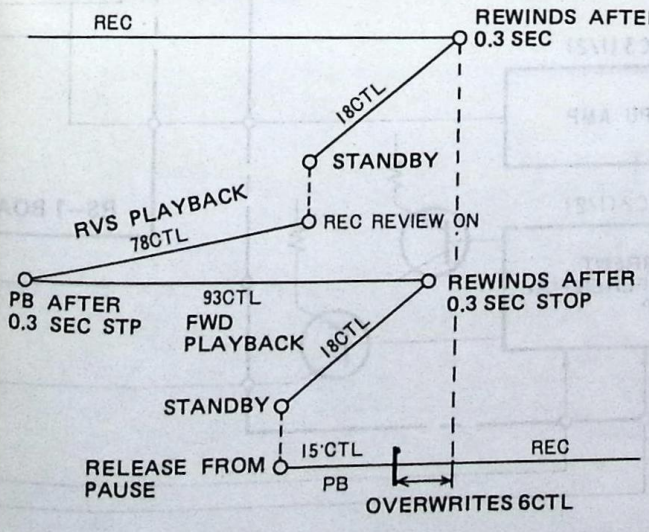

TAPE TRAVEL DURING REC REVIEW

3-3-4. Insert

(1) Audio insert

Servo control proceeds from PB to PB pause to PB.

(2) Video insert

Operation is the same as of making continuous pictures up to release from video insert pause. After release from pause, the same operation as of 15CTL playback for making continuous pictures continues during insert (PB mode locked to external VD). During this time, ordinary trackingcontrol is performed.
During video insert, the device starts to record CTL automatically 0.3 second after the detection of part of the tape where the CTL signal is not recorded.

VIDEO OPERATION

3-4. REEL SERVO CIRCUITS

The reel servo circuits are mounted on the RM-9, RS-1, and MA-6 boards.
In the SL-B5, the supply and takeup reel disks are driven by reel motors separately and directly. Fig. 3-16 is a block diagram of the reel servo circuits.

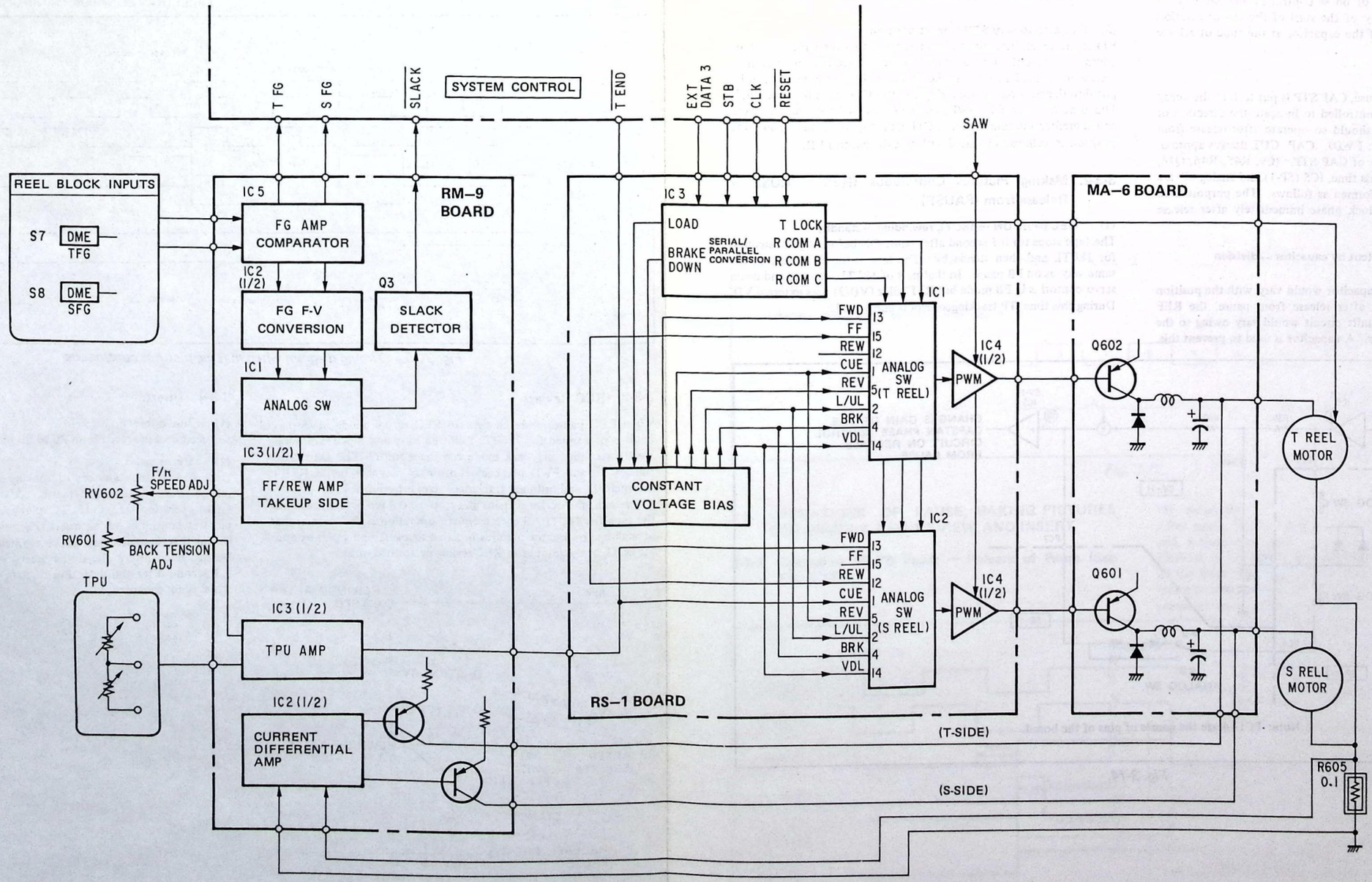

Fig. 3-16. Block diagram of the reel servo circuits

3-4-1. Reel Motors

Fig. 3-17 is the circuit diagram of the reel motors.

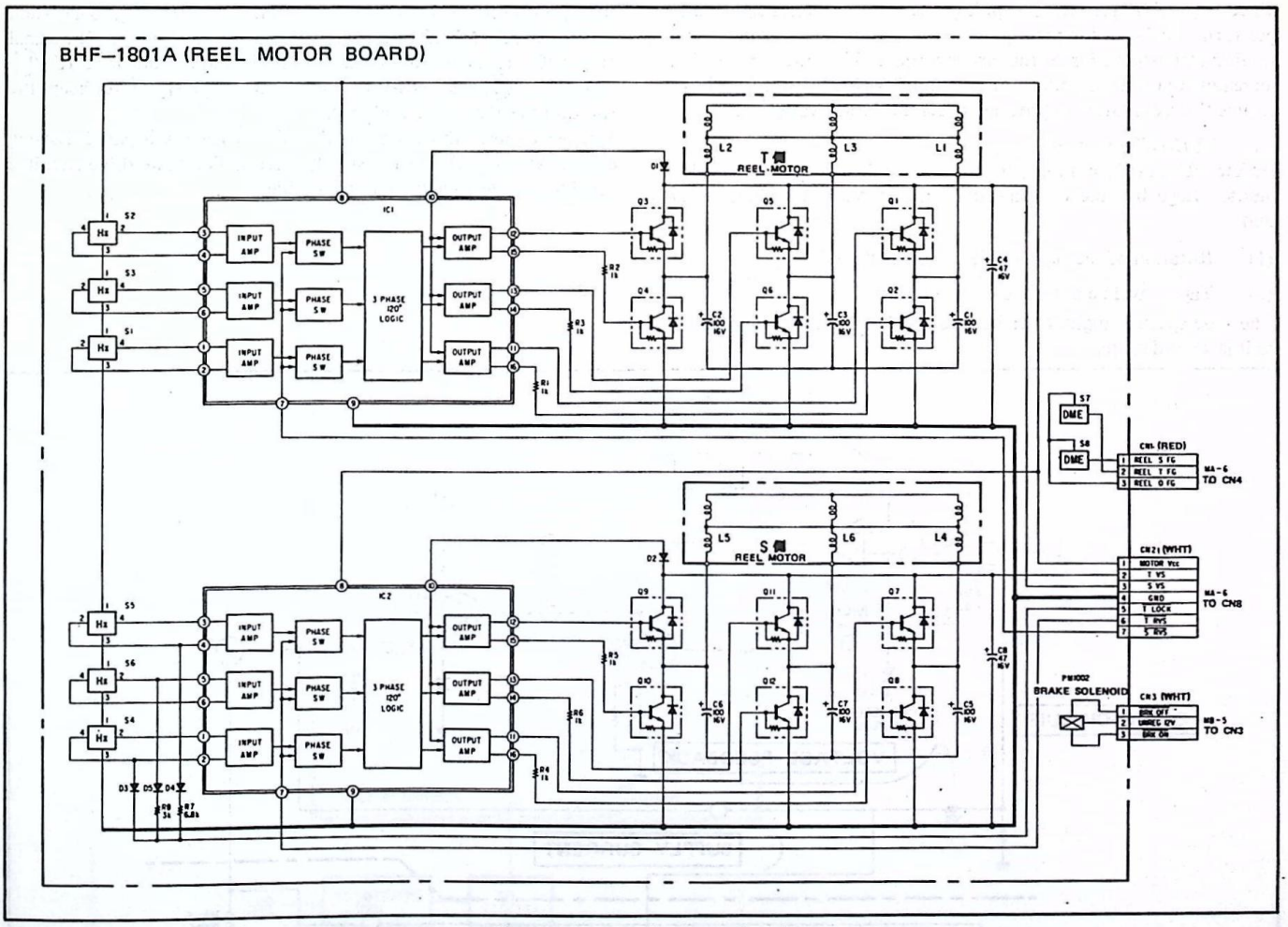

Fig. 3-17. Reel motor circuit

The direction of rotation of the reel motor is controlled by signals $\overline{\text{T RVS}}$ and $\overline{\text{S RVS}}$.
Relationships between the signals and the direction of rotation are as follows.

MODE	S RVS	T RVS	S REEL	T REEL
FF	GND	OPEN	↻	↻
REW	OPEN	GND	↺	↺
FF, REW	OPEN	OPEN	↺	↺

Note: At stop during threading and unthreading.

Table 3-3. Direction of real motor torque.

When signal $\overline{\text{T LOCK}}$ is L during threading/unthreading, the T-side reel is forced to stop to prevent the tape from moving.

3-4-2. Drive Circuit

IC1 and IC2 (RS-1 board) select drive signals according to operating mode.

The T-side analog switch selects IC1 and the S-side one IC2 according commands (A, B, and C) of system control.
Table 3-4 summarizes relationships of modes and input signals.

Out puts / Inputs / Mode	Command signal: Binary code	A (2^0)	B (2^1)	C (2^2)	S-side output: IC2 ON CH Signal name	T-side output: IC1 ON CH Signal name
FWD	0	L	L	L	S. FWD ⑬	T. FWD ⑬
RVS	1	H	L	L	S. VDL ⑭	T. VDL ⑭
FF	2	L	H	L	GND ⑮	*2 FF/REW(T) ⑮
REW	3	H	H	L	*2 FF/REW(T) ⑫	GND ⑫
CUE	4	L	L	H	*1 CUE(S) ①	CUT(T) ①
REV	5	H	L	H	REV(T) ⑤	REV(S) ⑤
Threading/ unthreading	6	L	H	H	S. threading/ unthreading ②	T. threading/ unthreading ②
STOP	7	H	H	H	BRAKE ④	BRAKE ④

Note: The signal names are the names of IC1 and IC2 pins.
Note: T and S of T/S output do not mean T-reel and S-real but T-side (takeup side) and S-side (supply side) related to mode.

The input signals to the analog switches are fixed voltages except for *1 and *2.

Table 3-4. Relationships of modes and input signals.

*1 S. FWD and CUE (S) signals

To the S-side input voltage during FWD and CUE modes, feedback is applied in such a manner that tape back tension be constant. Since the reel motor has eight poles, motor torque varies eight times per turn. TPU (tension pickup) detects variation of the tape tension resulting from variation of the motor torque. When the tape tension increases, the output voltage of an amplifier (IC3 of RM-9) falls to reduce the reel motor torque and cancel the torque variation.

*2 FF/REW(T) signal

During FF and REW mode, feedback is applied to the takeup-side input voltage by detecting the rotation of the supply side in order that

(1) Rotation of the supply side be constant, and

(2) Tape travel be not affected by hunting.

The tape speed is high at the beginning of tape and becomes lower as it is wound more.

The revolution speed of the reel motor, detected as FG frequency, is amplified in IC5 (RM-9) and converted to voltage from frequency in IC2 (RM-9). Out of the outputs of the takeup-and supply-side FGs, IC1 (RM-9) selects that of the supply-side one according to a system control signal. Mixed with part of the takeup-side output, the signal enters IC3 (1/4) of RM-9 which amplifies and sends it to IC (15) and IC2 (12) on RS-1 as the FF/REW(T) signal to keep the rotation speed on the supply side.

Fig. 3-18 shows the drive circuit (IC1 of RS-1 and part following analog switch IC2) and the supply circuit. The same drive circuit is provided on the takeup and supply sides.

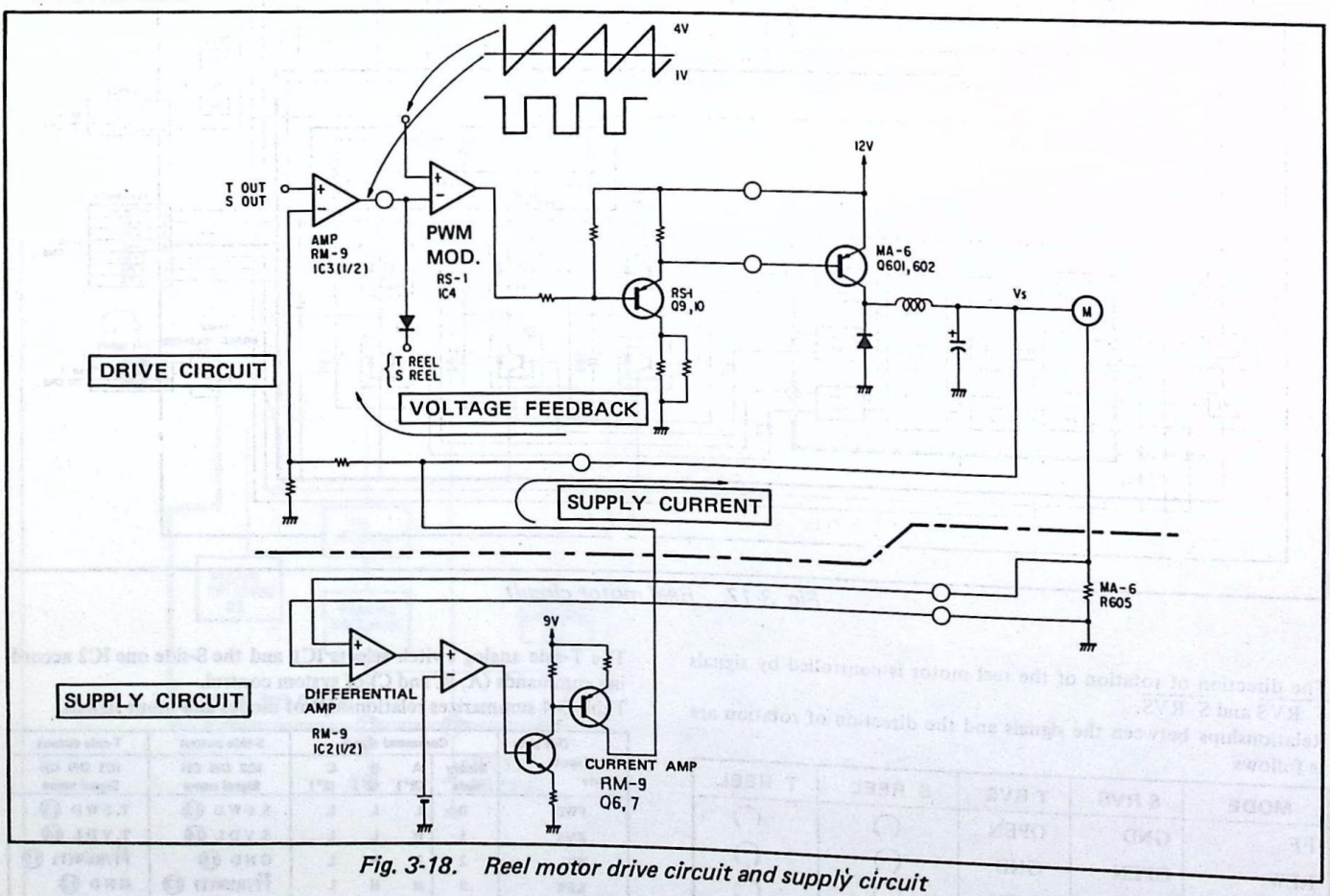

Fig. 3-18. Reel motor drive circuit and supply circuit

(1) Drive circuit operation

The signal, passing IC1 and IC2 (analog switch) of RS-1, enters amplifier IC3 (RM-9) which mixes it with Vs fed back so that Vs be kept constant regardless of supply voltage (12 V) fluctuation. The amplifier's output comes to IC4 (comparator) of RS-1, which compares it with a sawtooth wave (see Fig. 3-18) and outputs a PWM signal. The output signal, amplified by Q9 and Q10 of RS-1 and Q601 and Q602 of MA-6, passes a filter of LC and supplied to the motor as Vs (DC).

(2) Supply circuit operation

The supply circuit operates when load to the takeup motor is so great that it can hardly take up the tape.

The motor current is detected with R605 of MA-6, amplified by differential amplifier IC2 of RM-9, amplified again by Q6 and Q7 of RM-9, and supplied to the motor.

It begins to supply a supply current when the motor current reaches approximately 500 mA. The current increases as the motor current rises.

7-4. AUDIO CIRCUITS

All audio circuits are mounted on the MC-1 board but that the TT connector and earphone are on the MA-6 board. Fig. 4-1 is a block diagram of the audio circuits.

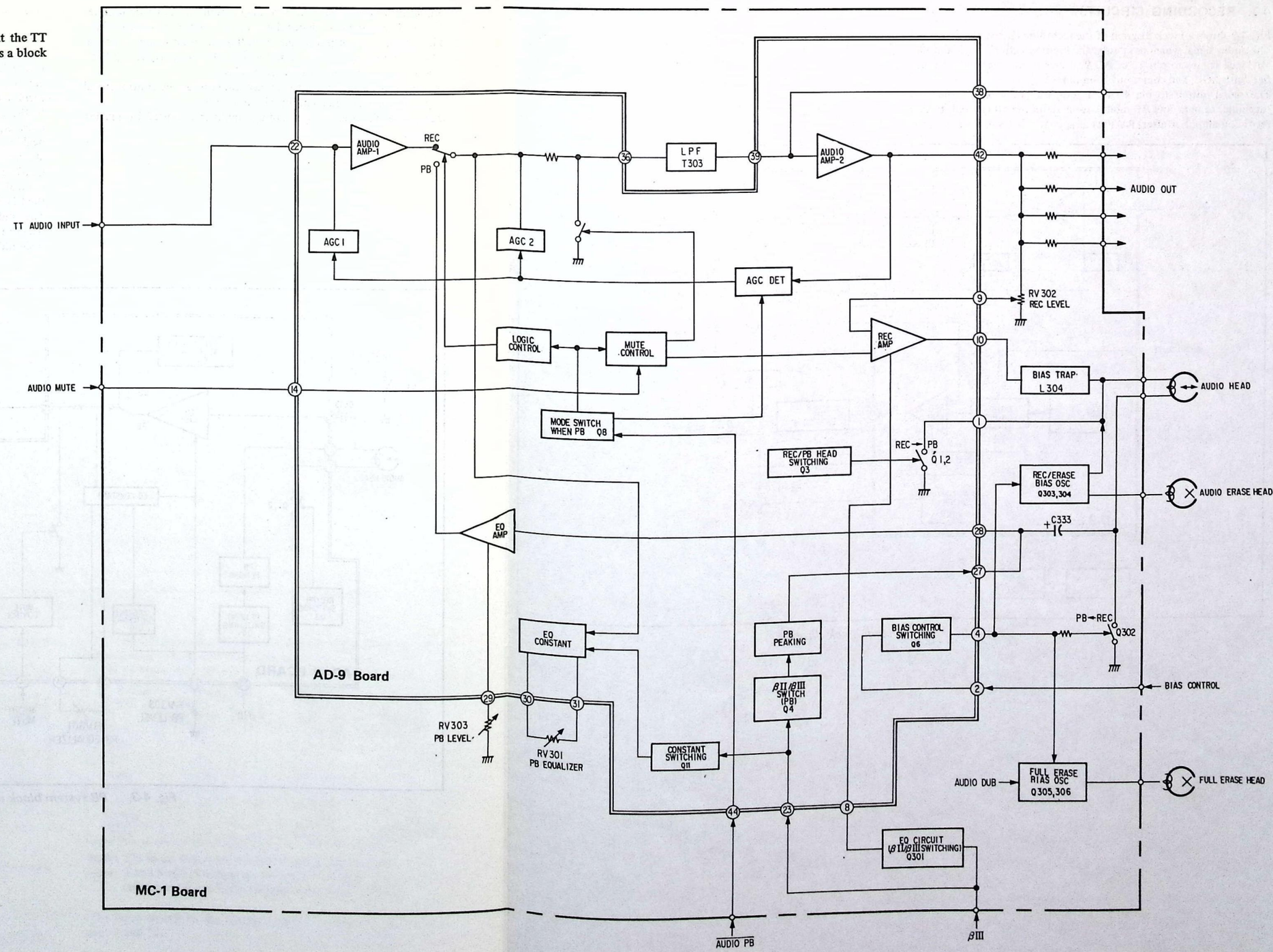

Fig. 4-1. Audio system block diagram

4-1. RECORDING CIRCUITS

Fig. 4-2 shows a block diagram of the recording circuits.
The audio signal which has passed the input selecting circuit and the MIC jack comes to pin 22 of AD-9, passes a two-stage audio amplifier with AGC, and comes out from pin 42.
The signal output to pin 42 then goes, on one hand, to the TT, earphone, camera, and RF modulator and, on the other hand, to the recording amplifier after RV302 has adjusted its level. A recording

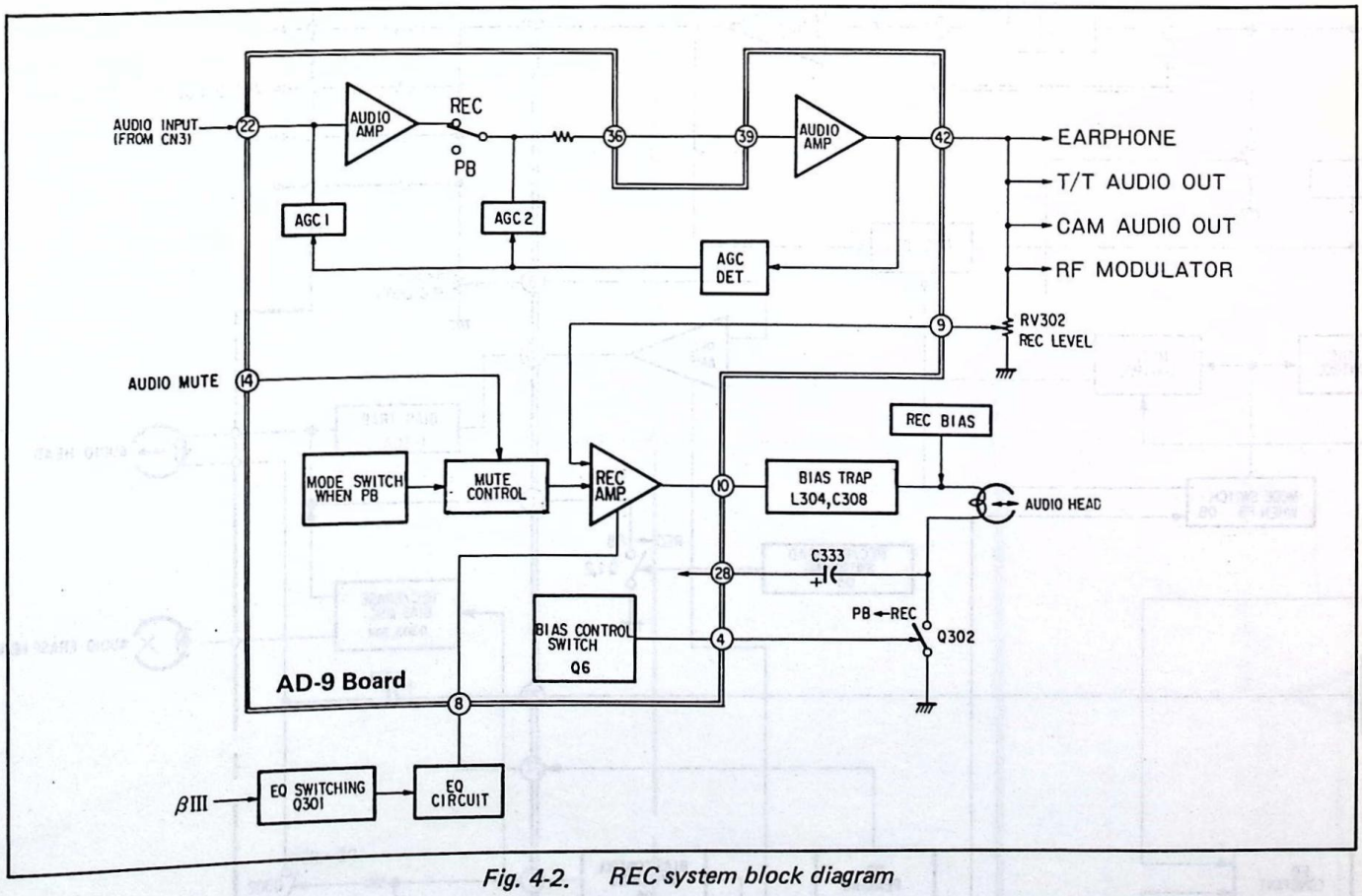

Fig. 4-2. REC system block diagram

equalzier is attached to the recording amplifier. Q301 determines the equalizer parameter depending on the presence or absence of the β III signal. The output of the recording amplifier comes from pin 10 of AD-9 via a bias trap (L304 and C308) to the recording head after being superposed on a recording bias.
During recording, Q302 turns on according to a bais control signal to permit the bias and recording signal to pass.
During EE/playback, the recording amplifier is muted by muting control.

4-2. PLAYBACK CIRCUITS

Fig. 4-3 is a block diagram of the playback circuits.
The reproduced signal is peaked and comes to pin 28 of AD-9 where it is equalized. The signal then comes from pin 36 to the audio amplifier via pin 39 of AD-9 and goes out from pin 42 to the earphone, T/T, camera, and RF modulator.
In the equalizer amplifier, RV303 adjusts playback level and RV301 does equalization characteristics. Q4 and Q10 varies playback peaking and equalizer parameters depending on the presence or absence of the β III signal.
Q307 and Q11 of the AD-9 board get switched by the TONE control signal, delivered from the tone control switch mounted on the FD-3 board, to determine tone quality (at high frequencies).
The audio muting signal comes from sytem control to pin 14 of AD-9 in order to mute the output of the equalizer amplifier so that it should go to the following stages via muting control.

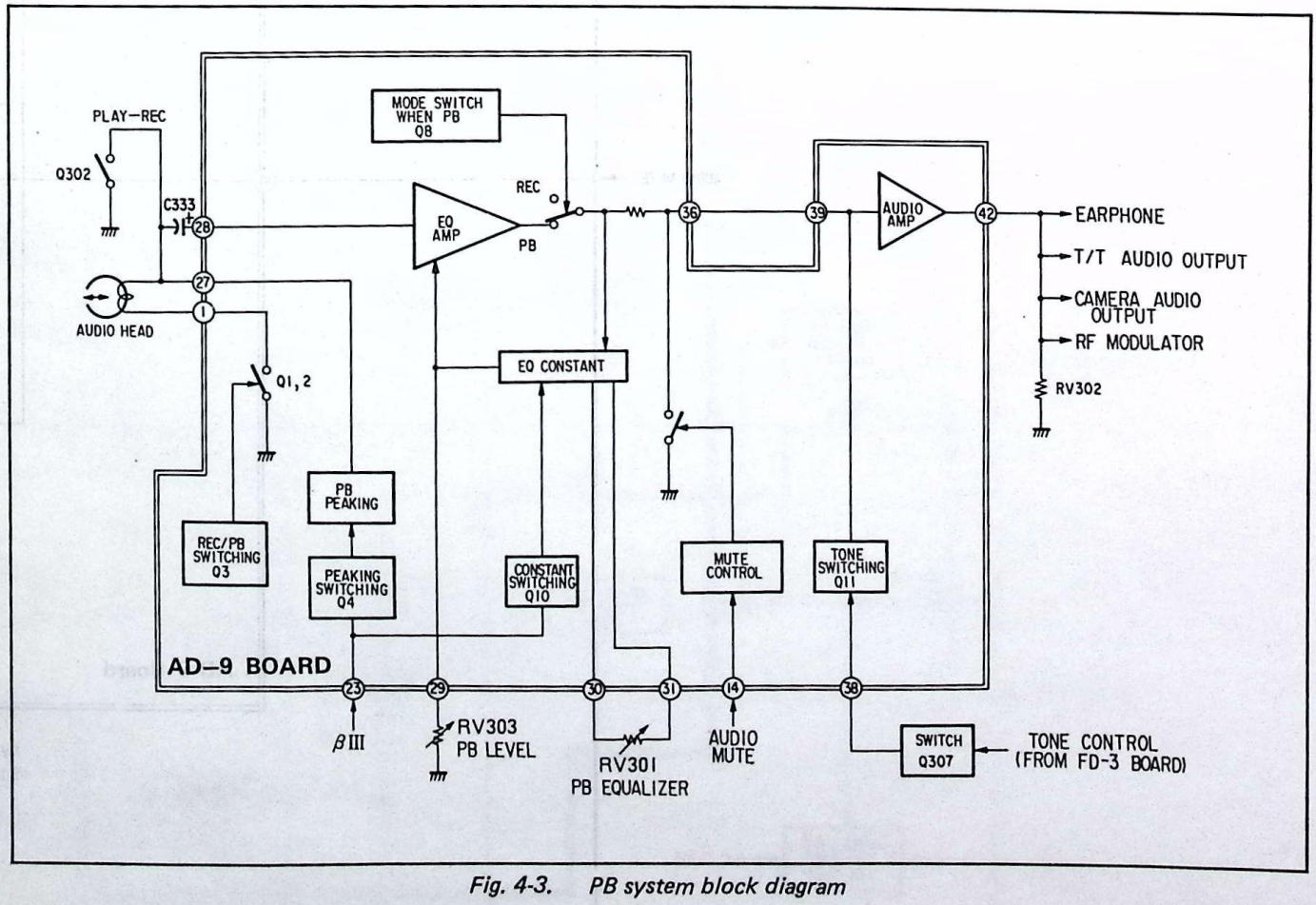

Fig. 4-3. PB system block diagram

4-3. RECORDING/PLAYBACK SWITCHING CIRCUIT

Fig. 4-4 is a block diagram of the recording/playback switching circuit.

- EE mode ($\overline{\text{AUDIO}}$ PB: H, BIAS CONT: L)

Q8 of the AD-9 board turns off and the recording/playback switch S selects EE/REC according to the logic control output, and the audio input coming to pin 22 is routed to the following stage. Q302, Q1-3 of the AD-9 board, Q6, and Q9 are off so that current does not flow to the record/playback head.

- Recording mode ($\overline{\text{AUDIO}}$ PB : H, BIAS CONT: H)

The switch S selects EE/REC as in EE mode.

Pin 2 of AD-9 is H so that Q6 and Q9 are on. The output goes out from pin 4 and powers the bias/erasing current oscillators so that the oscillators operate.

As Q302 is on, the audio signal comes, along with the bias current, from pin 10 of AD-9 to the record/playback head.

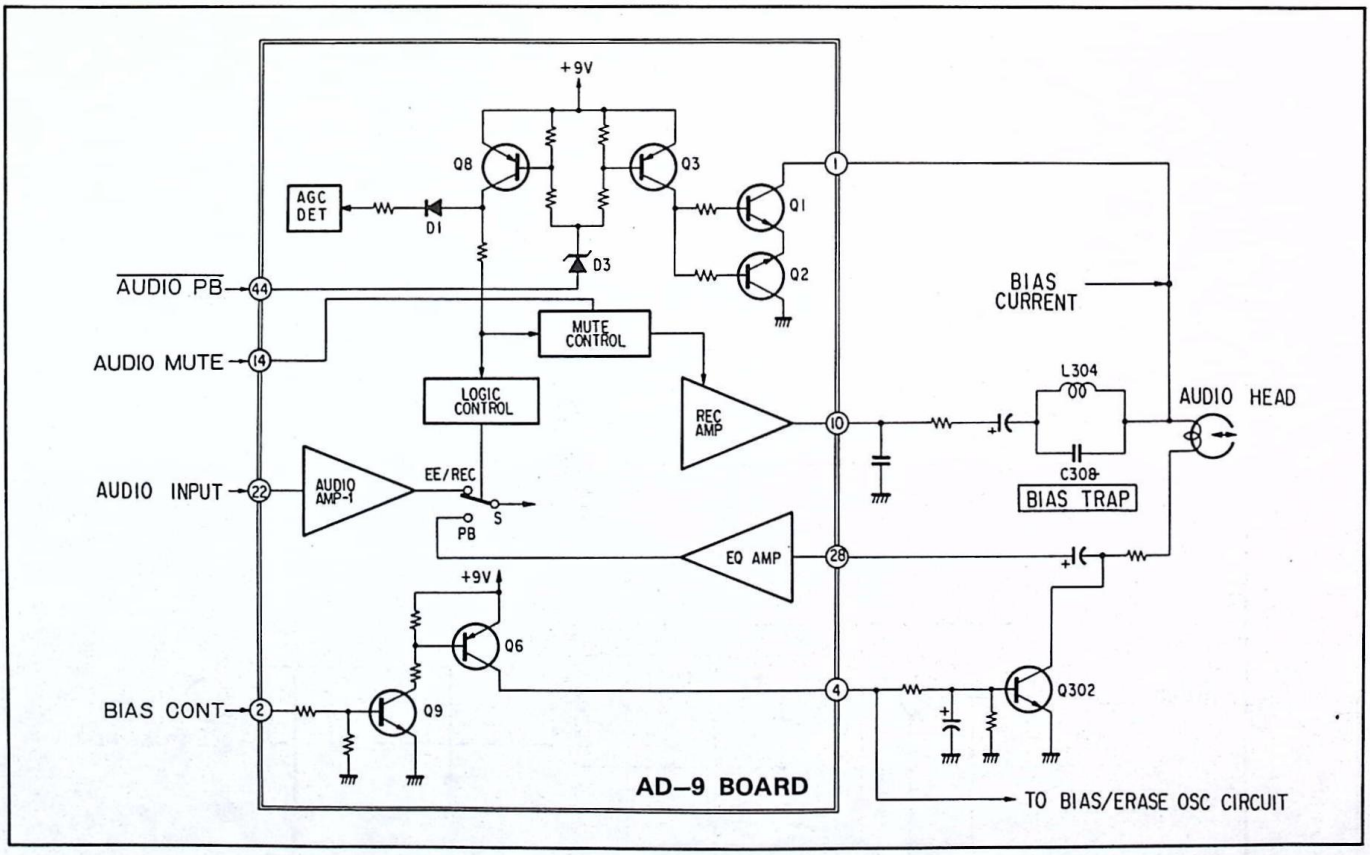

Fig. 4-4. AUDIO REC/play switching circuit

● Playback mode ($\overline{\text{AUDIO PB}}$: L, BIAS CONT: L)

Q1-3 of the AD-9 board are on and a terminal of the record/playback head is grounded. Q6 and Q9 are off so that the bias/erasing current oscillators are off. Q302 is off and the other end of the record/playback head connects to the equalizer amplifier.

On the other hand, Q8 of AD-9 is on and the recording/playback switch S selects playback EE/REC so that the audio signal is routed to the following stage. The output of the recording amplifier is muted by muting control. The output of Q8 fixes the AGC DET circuit via D1.

4-4. BIAS/ERASING CURRENT GENERATORS

Fig. 4-5 shows the bias/erasing current generators.

The bias (65 kHz) and erasing current (45 kHz) circuits operate with power supplied from pin 4 of AD-9 according to the BIAS CONT signal shown in Fig. 4-4. The audio erasing current is generated from the output of the bias generator.

During audio insert, AUDIO DUB is H so that Q306 is on and Q305 off. As a result, full-width erasure does not operate.

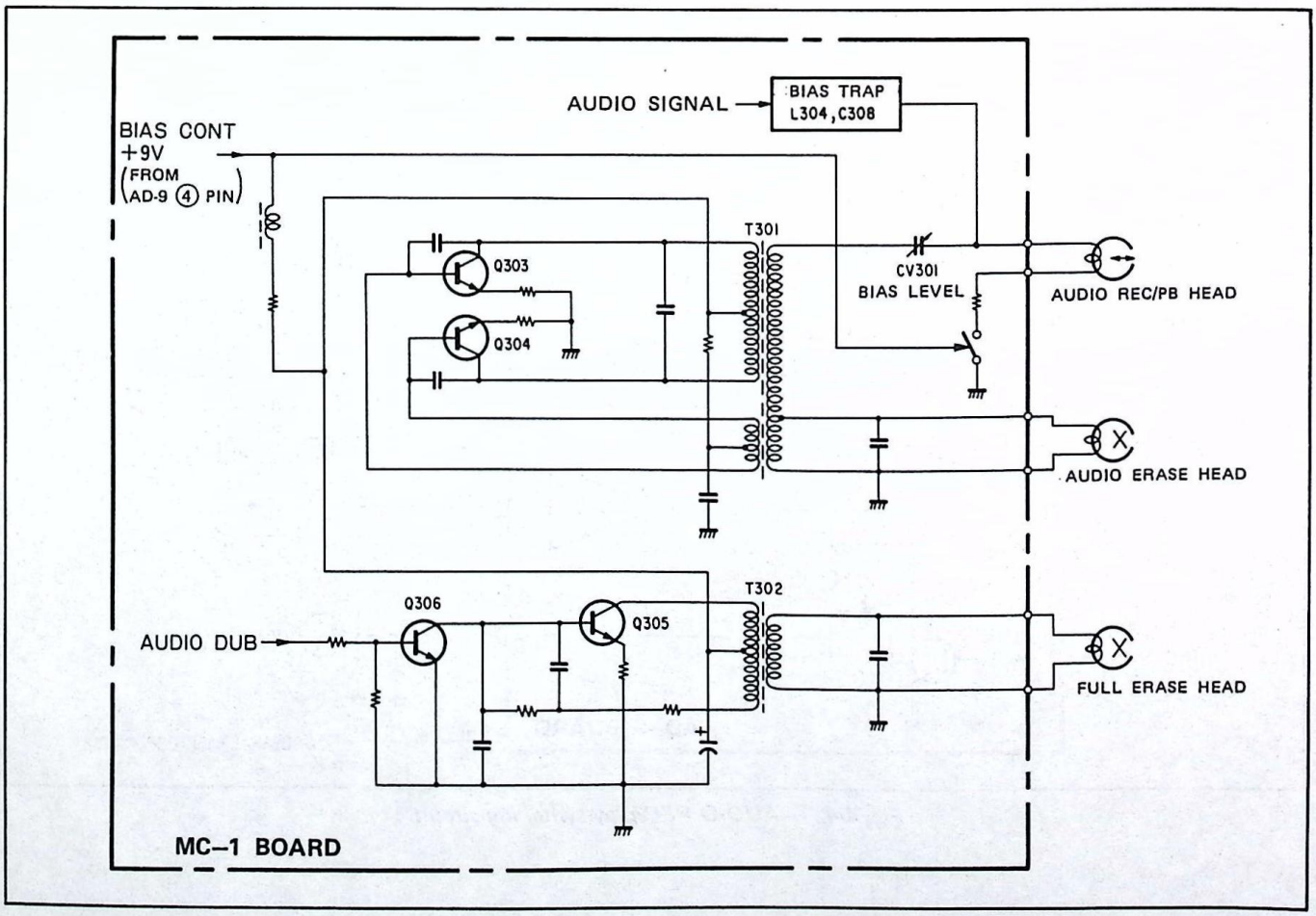

Fig. 4-5. BIAS/ERASE osc circuit

7-5. MECHANICAL SECTION OPERATIONS

5-1. Cassette Loading

Fig. 5-1 shows the cassette mechanism and the movement of mechanical parts when a cassette is pushed down.
The drum motor momentarily rotates counterclockwise when the power supply of the unit is turned on. Press the EJECT button to lift the cassette container assembly (1) and load a cassette. See Fig. 5-1a. Section (A) of the cassette in Fig. 5-1b moves through tab (2) of the cassette container assembly (1), releasing the lock mechanism in the cassette by pushing tab (3) (Fig. 5-1c) inward. By pushing the cassette container assembly (1) down, the cassette lid is lifter by section (5) (Fig. 5-1c) of the cassette container assembly (1).

Pin 6 (Fig. 5-1d) is mounted on cassette lid (4) (Fig. 5-1c). When the lid is opened upward by the mechanism, pin 6 (Fig. 5-1d) rotates in the direction shown by the arrow (C) and latch (7) rotates in the direction shwon by the arrow (D) centered on axis (8) to unlock the tape spool's toothed wheel. The S reel (9) (Fig. 5-1b) and T reel (10) rotate freely when this toothed wheel is unlocked.
When the cassette container assembly (1) (Fig. 5-1a) is pushed down, the lock lever assembly (12) (Fig. 5-1c) catches on the latch (11) in the upper section of the cassette container assembly (1) to lock the cassette container down. At the same time, the cassette is held by cassette stopper (13).

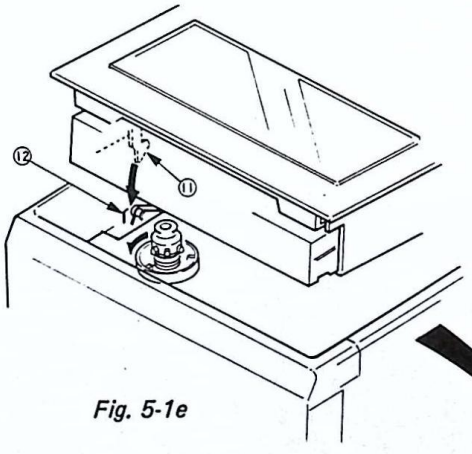

Fig. 5-1e

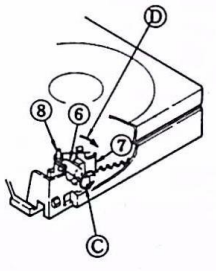

Fig. 5-1d

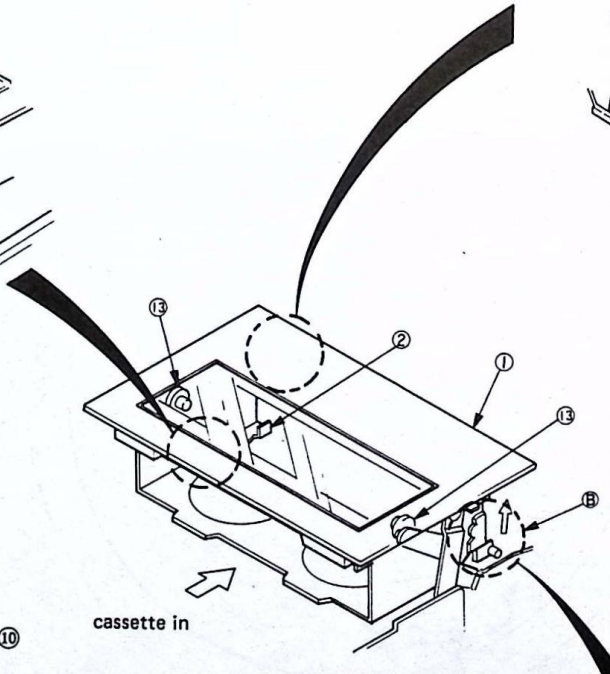

Fig. 5-1a

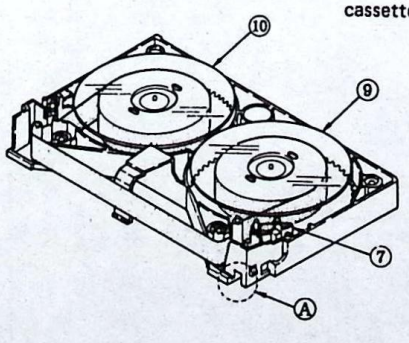

Fig. 5-1b

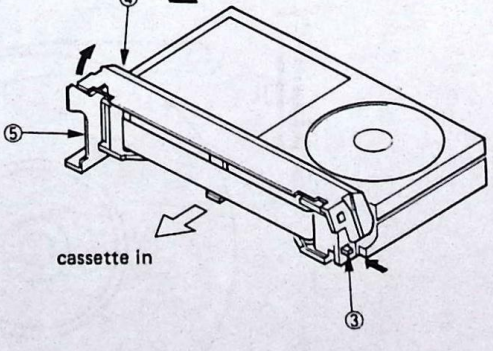

Fig. 5-1c

5-2. Threading

Fig. 5-2 shows the threading operation, and Fig. 5-3 is a view from the rear side of the chassis during threading. When a cassette is inserted in the cassette container and the container is pushed down, the cassette detection lever is pushed by the cassette to operate the cassette-in switch (2) (Fig. 5-2 insert at lower left).
When the cassette-in switch (2) operates, the brake solenoid (3) between the two reel motors releases the brake sues (5) and (6) while the S reel (7) rotates in the direction shown to supply the tape. In actual operation, a force is supplied to the S reel (8) in a direction opposite that shwon by the arrow in the diagram to maintain tape back tension, and the reel is pulled in the direction shown in the diagram by the tape. The T reel (7) does not rotate at this time because of an electrical brake. The threading motor (9) rotates in the direction of the arrow simultaneously with the rotation of the S reel. This rotation is transmitted to the gear set (9) by a belt, and the gears rotate in the direction of the arrows.
These gears rotate S-threading ring (11) and slider gear assembly (12) in the direction shown by the arrows.

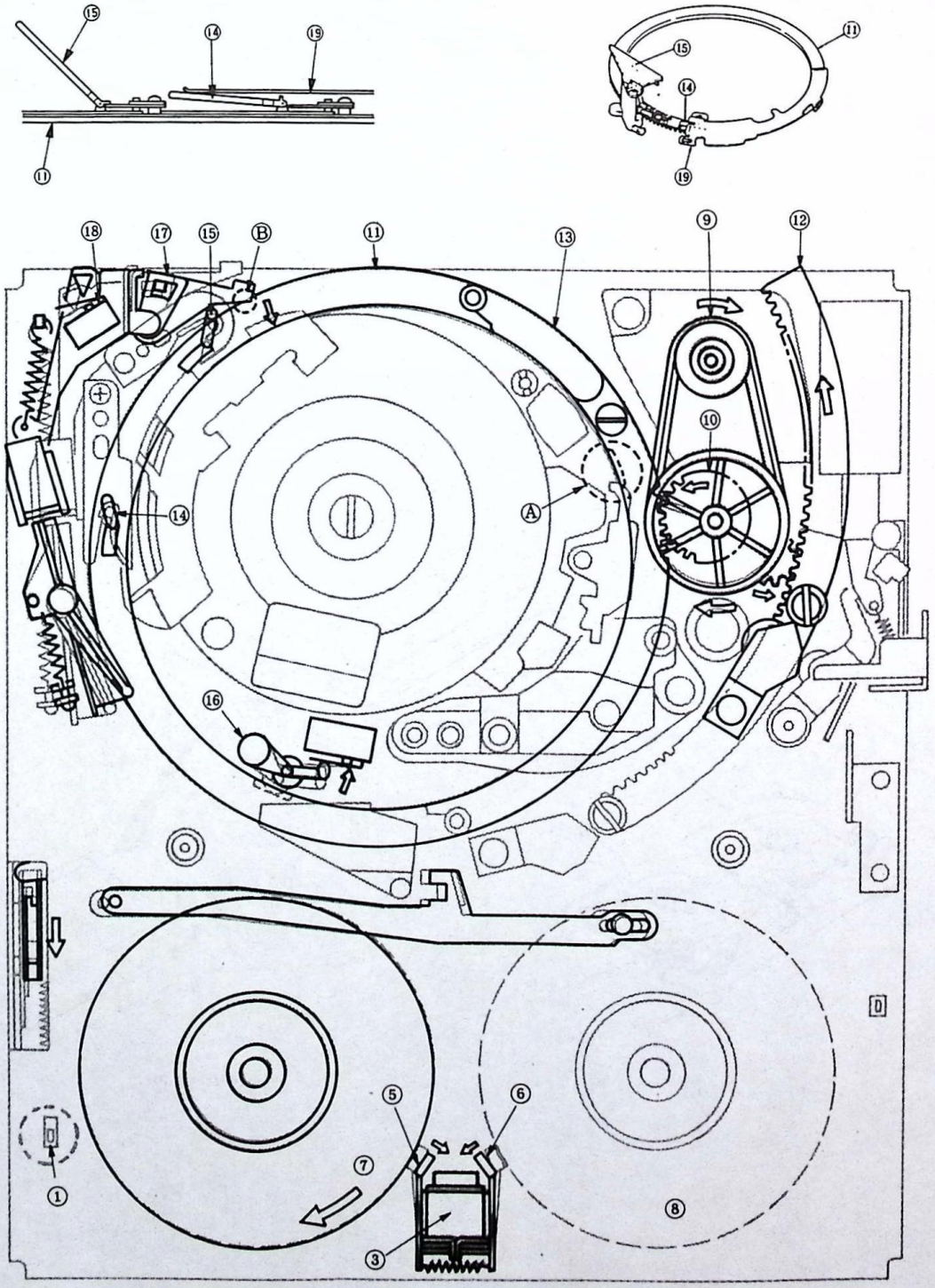

Fig. 5-2

Loading shuttle set (13) , No. 2 guide (14) , and No. 3 guide (15) mounted on the S threading ring (11) bring the tape to a predetermined position while guiding it. Number 2 and 3 guides (14) and (15) are pushed up by a spring as the S threading ring (11) , which is housed in a pin recliner (19) rotates (inset at top left of Fig. 5-2).

When S threading ring (11) started rotating at the beginning of threading, unthreading end switch arm assembly (16) moved in the direction of the arrow as notch (A) of the S threading ring (11) moved, pushing the actuator of the unthreading end switch to operate the unthreading end switch. This allowed threading.

Once the S threading ring (11) reaches the end of the threading position, the lock roller of the lock arm assembly (17) drops into notch (B) of the S threading ring, and locking arm assembly (17) moves in the direction of the arrow, opening the threading end switch (18) , which terminates threading.

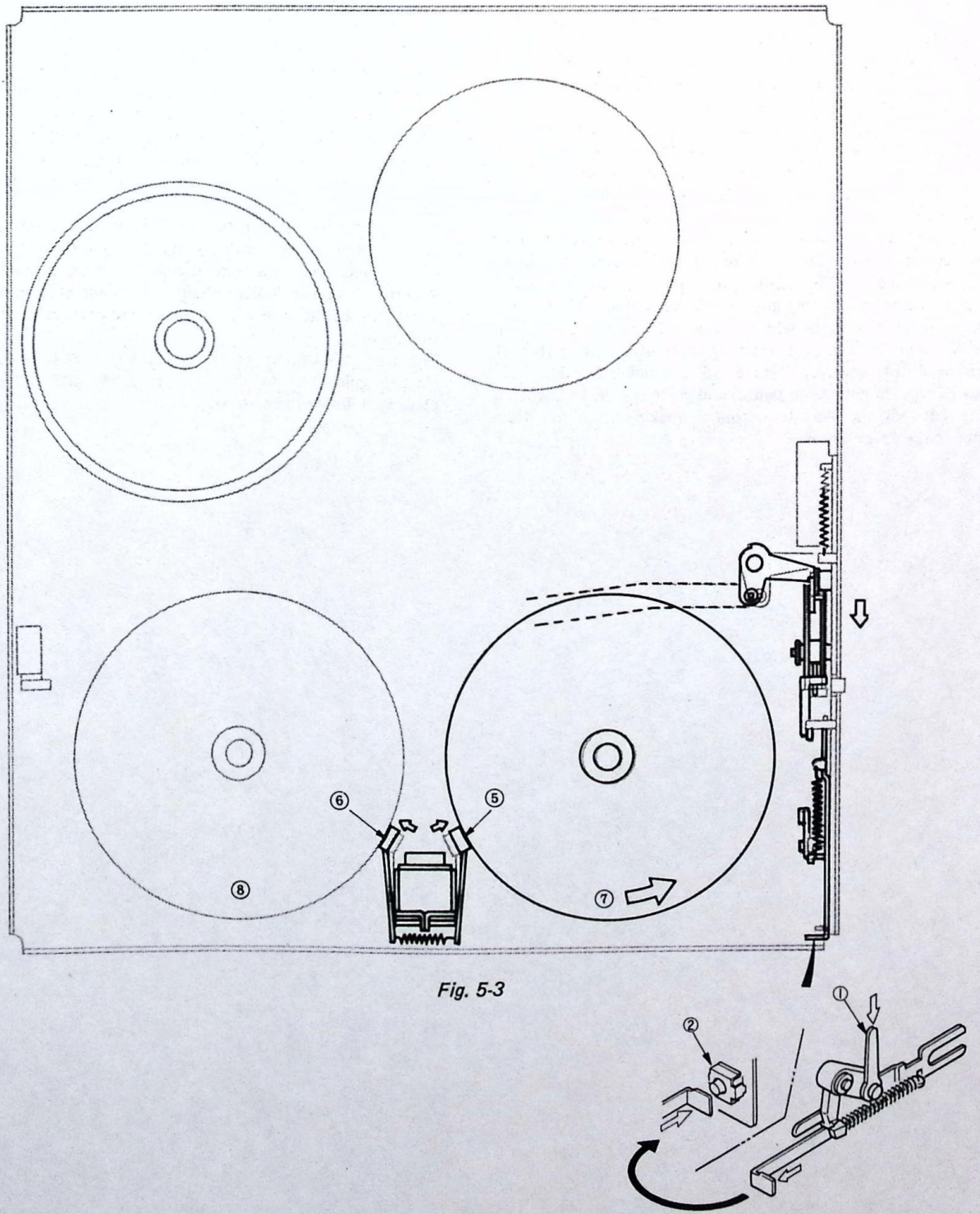

Fig. 5-3

5-3. TAPE PATH

Fig. 5-4 shows the tape phth from S reel (1) to T reel (2).
The tape emerging from the S reel (1) is drawn out from the cassette after passing through guide (3) in the cassette, tape antisag plate (4), and exit guide (5). (A) tape may be damaged when it is drawn out while it is sagging inside the cassette; the antisag plate (4) prevents this.
The tape passes by the S coil sensor (8) mounted on the TP base assembly (7) through No. 1 guide (6). When the entire tape is wound on the T reel (2) and an aluminum foil leader indicates that the tape is at its end, the S coil sensor (8) senses this condition. The mode then changes to the stop mode, and then momentarily changes to the rewind mode.
The tape passing by the S coil sensor passes through guides No. 2 and 3 (9), (10) and reaches No. 4 guide (12) mounted on the loading shuttle set (11).
The No. 2 guide (9) is adjusted so as to maintain constant tape height where the tape enters the cassette at the time the tape is drawn out or is rewound. The No. 3 guide (10) adjusts the tape direction and tension balance along the tape width, top and bottom.
The tape running direction is changed in the drum direction by the No. 5 guide (13), also mounted on the loading shuttle set (11). No. 5 guide (13) consists of a guide flange and guide roller and adjusts the running angle of the tape entering the drum. The tape, the direction of which is changed approximately 180° by the No. 5 guide (13), contacts the drum after passing through the FE head (14) and No. 6 guide (15). Number 6 guide (15) consists of a guide nut, guide flange, and guide spacer, and controls the top edge of the tape to optimize tracking from the drum entrance to the drum center.
The tape contacting the drum travels on the circumference of the drum (16) for about 180° and contacts two rotating video heads (17) during this time. The top edge of the tape travelling on the drum circumference (16) is controlled by a tape holder (20) inside the tape holder (19) mounted on the drum (18) while the bottom edge is controlled by the groove (12) in the lower drum.
The tape leaving the drum's circumference (16) passes through the No. 7 guide (22), ACE assembly (23), and No. 8 guide (23). Guides No. 7 and 8 (22) and (23) have guide flanges to control the top edge of the tape travel. The tracking from the drum center section to its exit is optimized by an adjustment screw.
The tape leaving the exit side guide passes between the capstan motor shaft (25) and pinch roller (26), reaching the No. 9 guide (27). The No. 9 guide (27) consists of a guide flange and guide roller, and the top edge of the tape is controlled by the guide flange, particularly to maintain the proper tape height between the capstan motor shaft (25) and the pinch roller (26) during reverse operation. Capstan motor shaft (25) is adjusted to be vertical relative to the travelling tape and rotates at a fixed speed depending on the mode to supply the tape at a predetermined speed.
The tape passing through the No. 9 guide (27) passes by the T coil sensor (28), and its height is adjusted by the No. 10 guide (30) of the pinch clamping arm assembly (29) as the tape enters the cassette. The T coil sensor (28) detects the aluminum foil leader at the end of the tape during rewind and changes the mode to the stop mode.
The tape is taken up on the T reel (2) after it travels from the No. 10 guide (30) to the entrance guide (31) and tape antisag plate (32) inside the cassette.

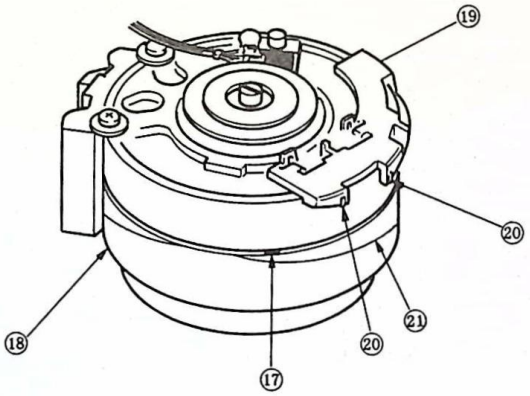
19
20
18
20
21
17

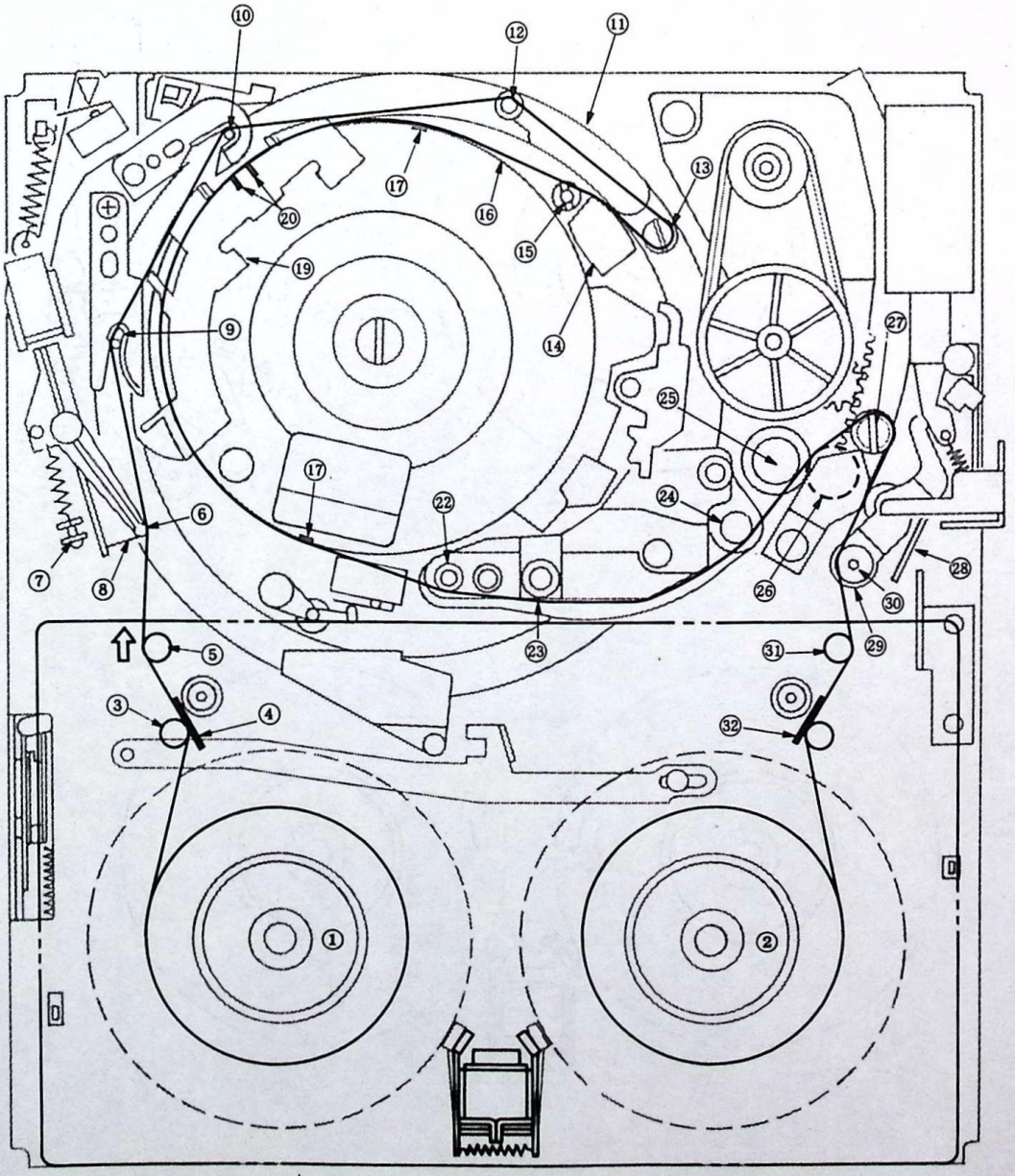
10
12
11
17
20
16
15
13
19
9
14
27
25
17
22
24
6
7
8
26
28
30
23
31
29
5
3
4
32
1
2

Fig. 5-4.

5-4. PLAY

Fig. 5-5 and 5-6 show the operation of the mechanical section during play. By pressing the play button, the rotary disc assembly (1) of the drum motor rotates in the direction shown. The capstan motor shaft (2) also rotates in the direction shown. The brake solenoid (3) on the reel motor circuit board pulled in the direction shown the brake sues (5), (6) and the brake is released and the S and T reel (7) and (8) start rotaing in the direction shown. When servicing, if there is no cassette installed, the supply motor (7) will be seen to rotate in a direction opposite that of the forward tape direction in order to eliminate tape sag and to maintain back tension. No. 1 guide provides back tension sensing. Refer to the servo section for description. (See Figs. 5-5 and 5-6).

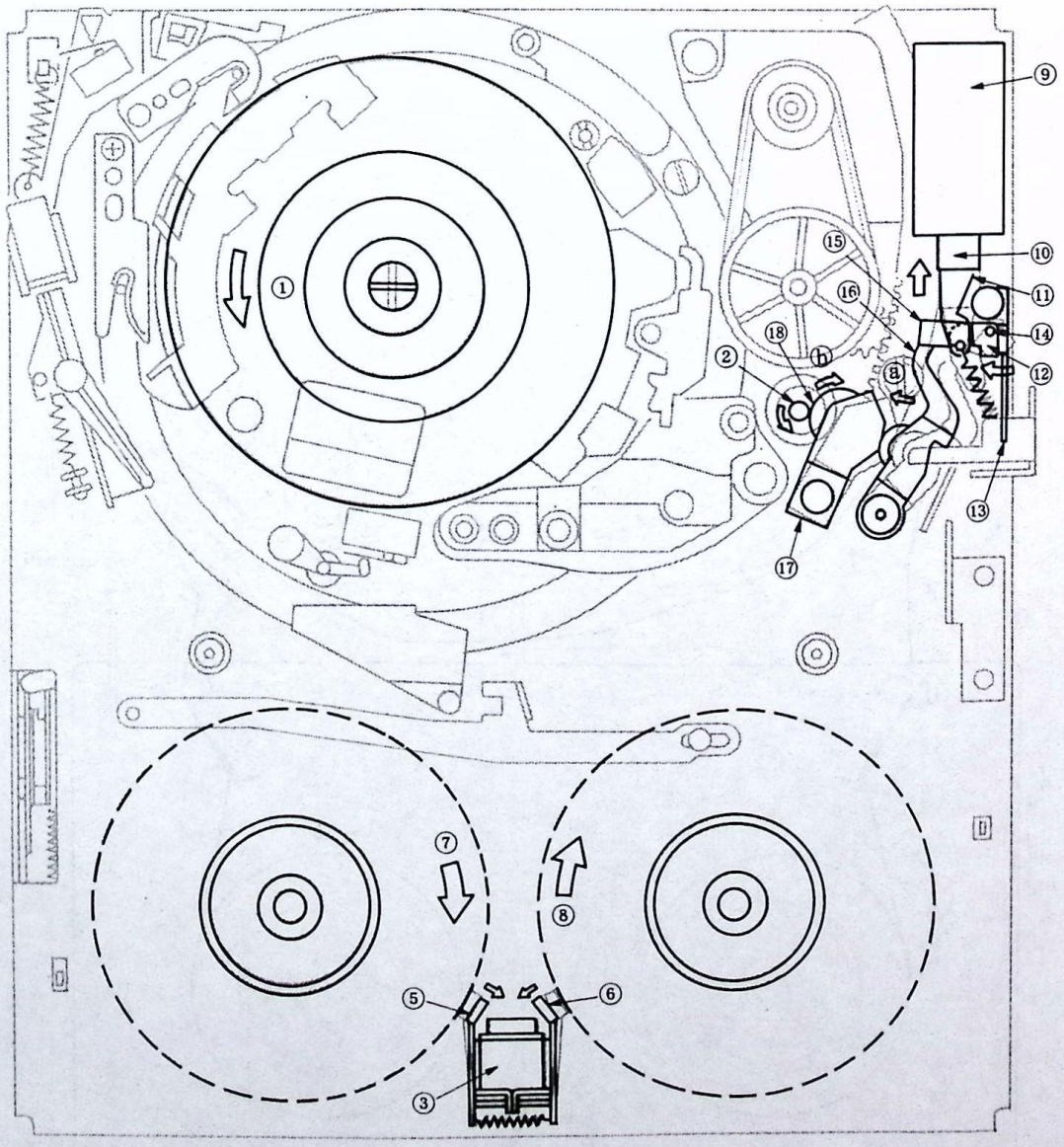

Fig. 5-5.

As pinch solenoid ⑨ attracts plunger ⑩ , pinch solenoid arm ⑪ pulls PL link ⑫ so that it rotates around shaft ⑭ of pinch limiter arm ⑬ in the direction of the arrow, thereby pushing pinch pressure arm ⑯ in the direction of arrow ⓐ via pressure arm link ⑮ . Pinch roller arm assembly ⑰ , pushed by pinch pressure arm ⑯ , presses against capstan motor shaft ② in the direction of arrow ⓐ on the other side of the tape. Pinch roller ⑱ of pinch roller arm assembly ⑰ rotates in the direction of arrow ⓑ according as capstan motor shaft ② rotates in order to let the tape tavel steadily.

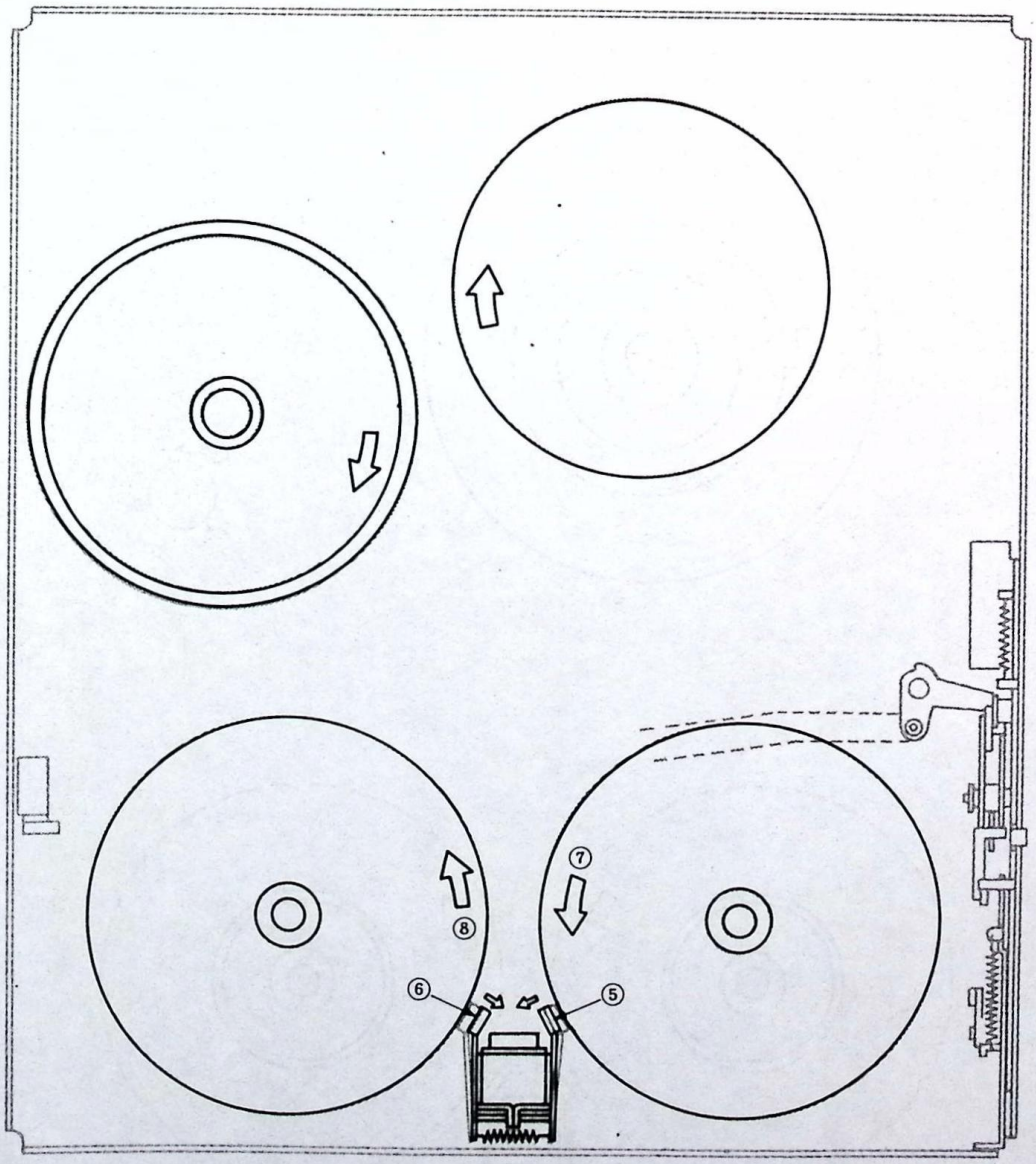

Fig. 5-6.

5-5. FAST FORWARD

Operation during fast forward is shown in Figs. 5-7 and 5-8. By pressing the FF button, the brake solenoid (1) is energized and the brake sues (2), (3) are pulled in the direction shown. By this action, the brake is released, and the T reel (6) starts rotating in the direction shown, tape is pulled into the take up reel causing the S reel to supply tape and turn in the direction shown. Simultaneously, the drum head disc (7) and pinch roller (8) rotate in the direction shown. Fig. 5-8 shows the foregoing operation as viewed from the bottom of the mechanical chassis.

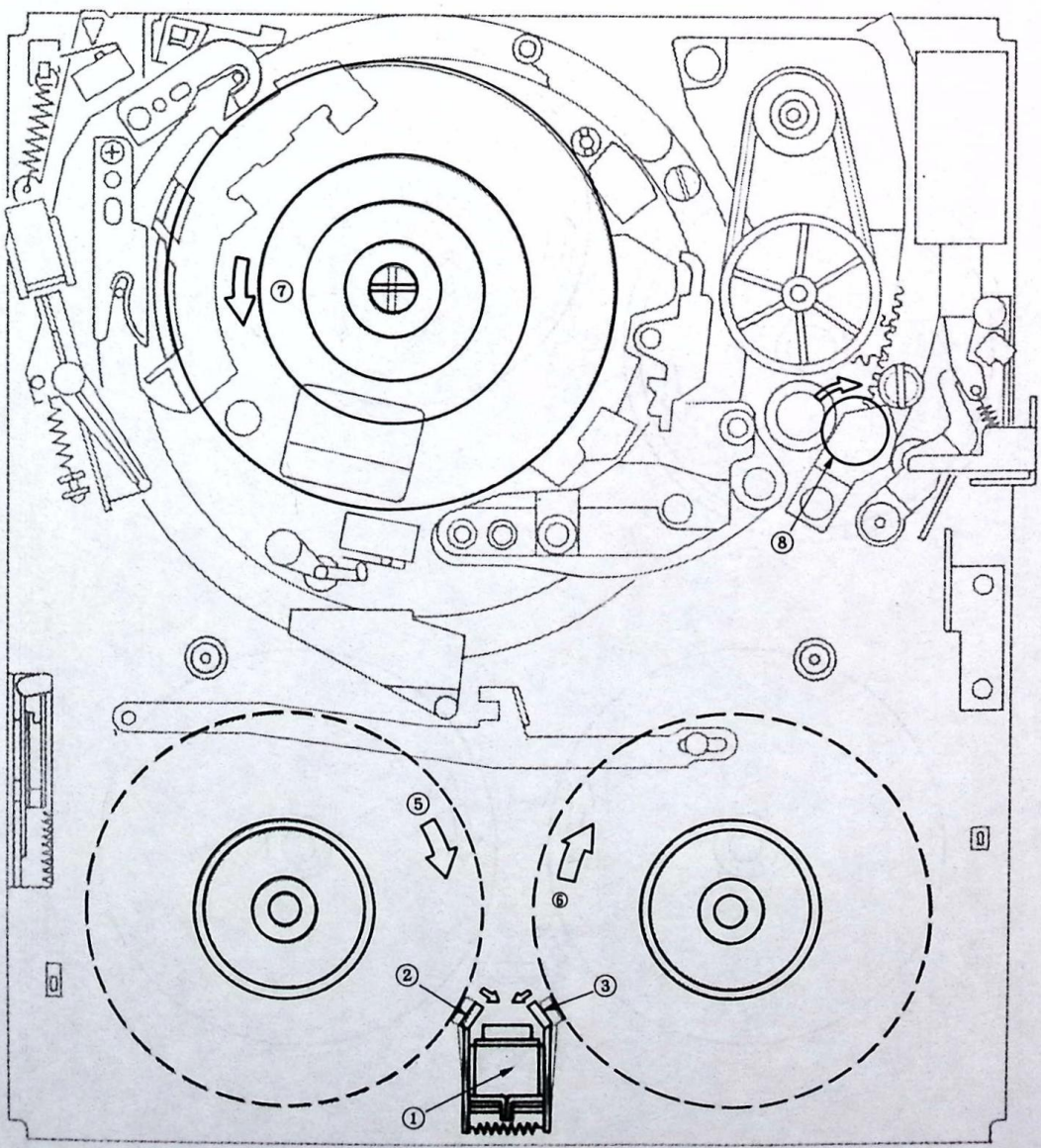

Fig. 5-7.

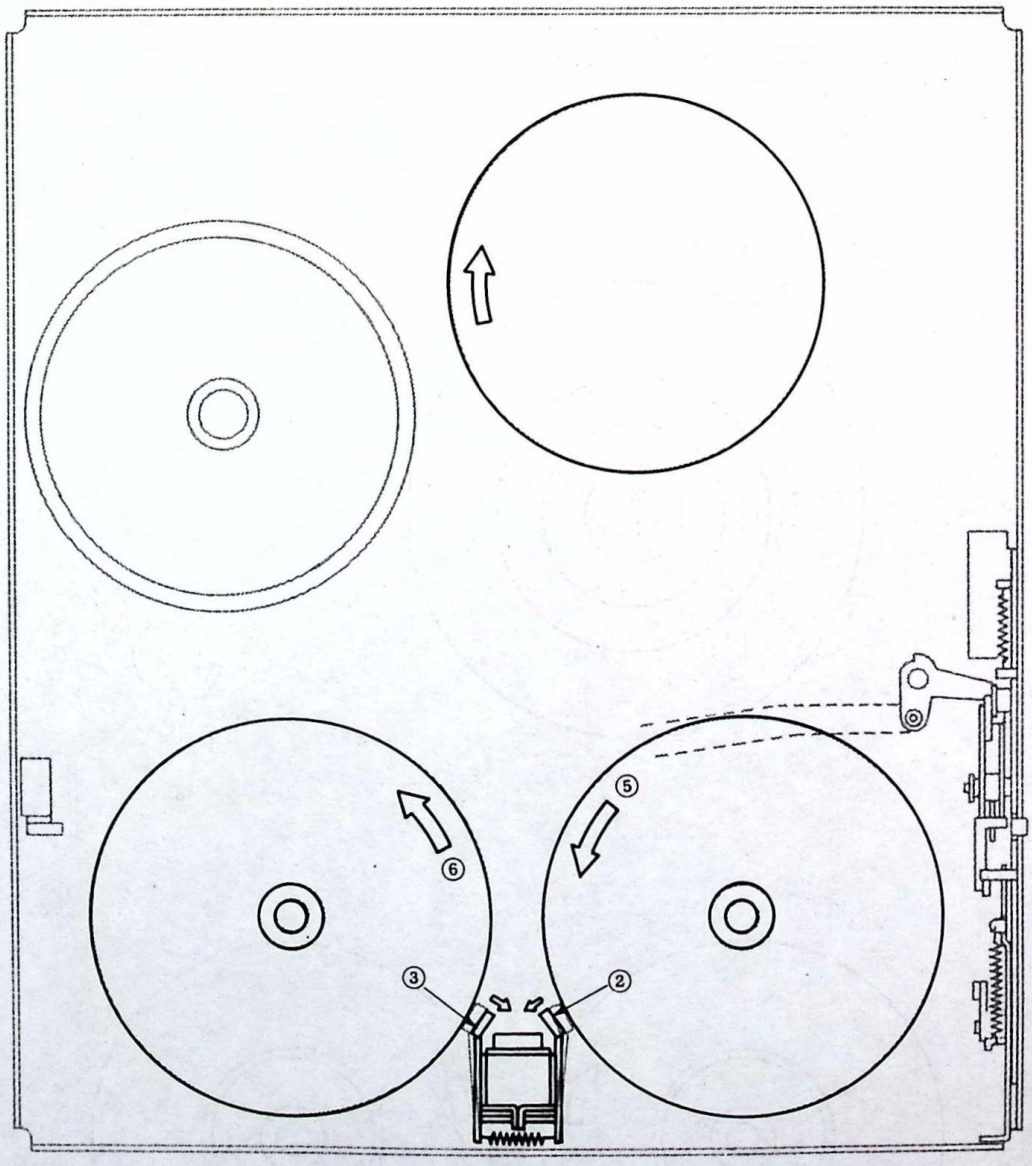

Fig. 5-8.

5-6. REWIND

Fig. 5-9 shows the operation during rewind. By pressing the rewind button, the brake solenoid (1) is energized and the brake sues (2), (3) are pulled towards the arrow. The brake is released, and the rewinding operation starts. Tape is pulled into the S reel (5), the S reel rotates in the direction shown, and tape is supplied by the T reel (6) which rotates as shown. Simultaneously, the drum head disc (7) and pinch roller (8) rotate in the directions shown. Fig. 5-10 shows the foregoing operation as viewed from the bottom of the mechanical chassis.
(See Figs. 5-9 and 5-10).

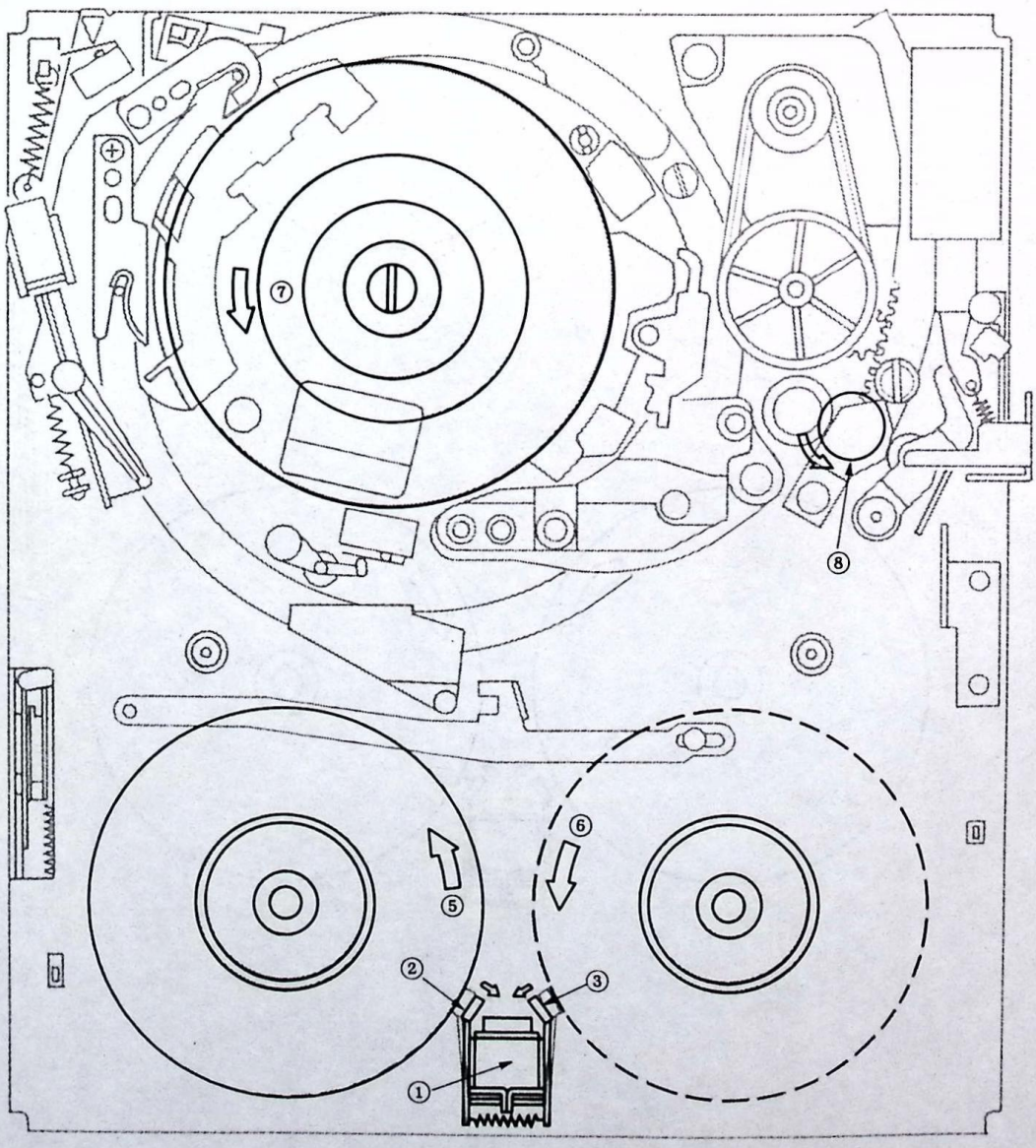

Fig. 5-9.

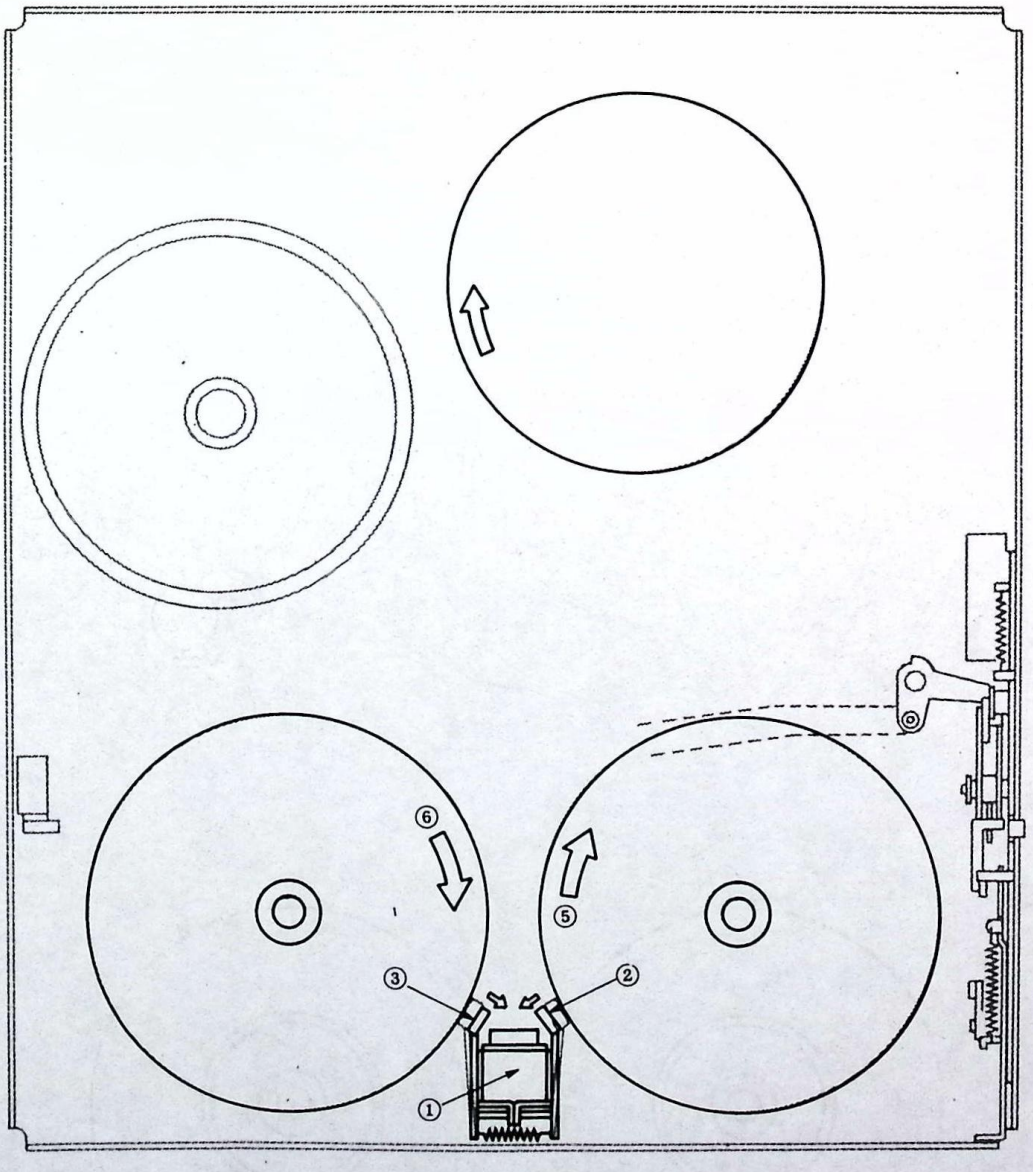

Fig. 5-10

5-7. PUCTURE SEARCH

5-7-1. Forward Picture Search (CUE) and Forward FR Picture Search

Fig. 5-11 shows the operation of the mechanical section in forward picture search. By pressing the fast-forward button in the play mode, the pinch roller (2) remains in contact with the capstan shaft (1) and rotates in the direction shown at a speed faster than in the play mode (about (12) times faster in the β II mode; about (15) times faster in the β III mode).

As for tape motion, the rotational speed of the T reel (4) is faster than in the play mode, and the operation of the S reel (3) follows accordingly. The rotational speed of the rotary head disc (5) does not change from that of play.

If you depress the fast-forward button during the fast-forward mode, the device enters the stop mode for a moment and then immediately, as pinch roller (2) presses against capstan motor shaft (1), reenters the forward FR picture search mode (same as the forward picture search mode) as long as the fast-forward button is kept depressed.

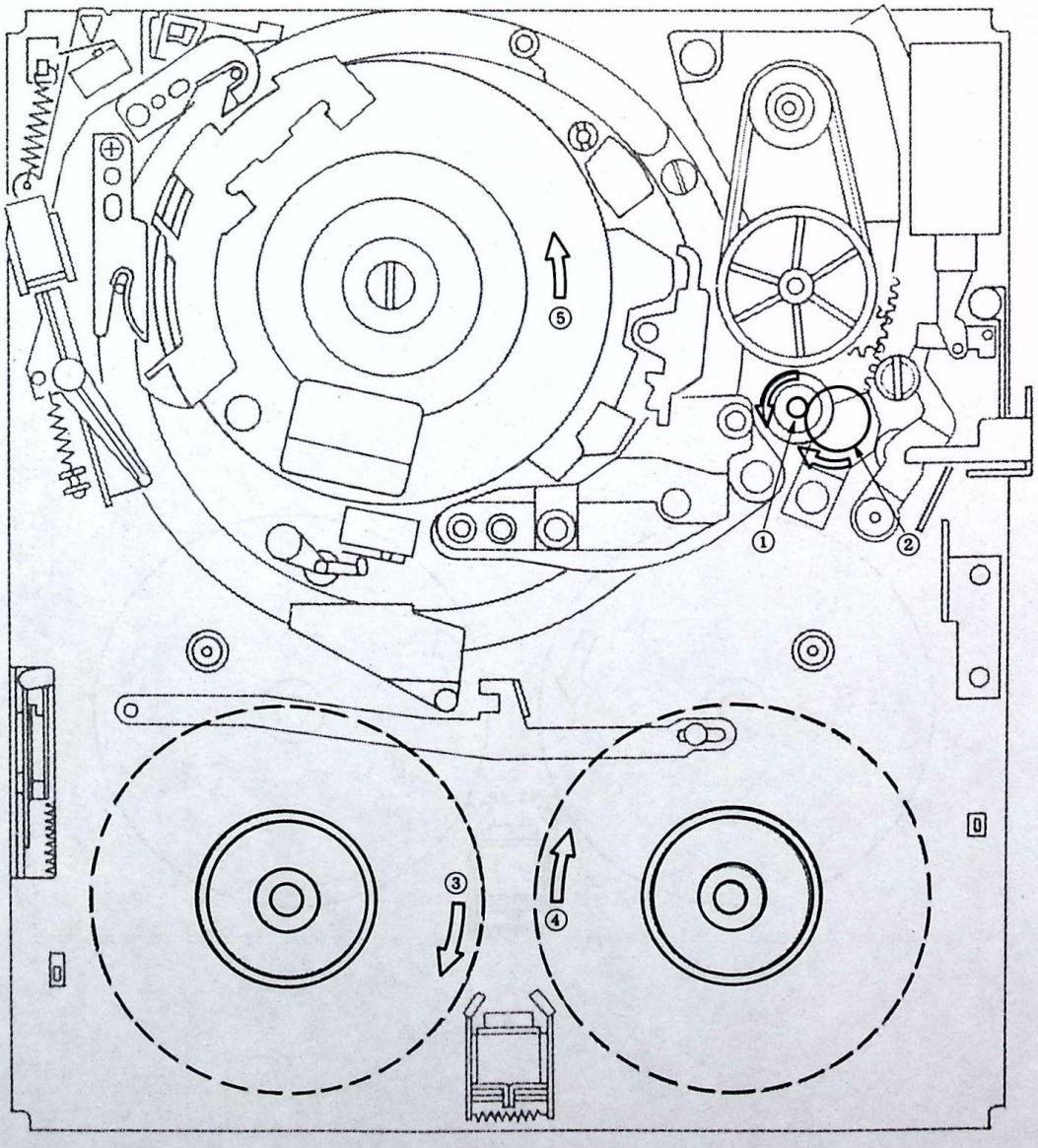

Fig. 5-11.

5-7-2. Reverse Picture Search (REVIEW) and Reverse FR Picture Search

Fig. 5-12 shows the operation of the mechanical section in reverse picture search. By pressing the REW button in the play mode, the capstan motor shaft (1) and pinch roller (2) start rotating in the direction opposite that during play. The rotational speed is the same as that in forward picture search. As for tape motion, the rotational speed of the S reel (3) is faster than that during play, and the T reel (4) also follows accordingly. In this instance, however, the motor for the T reel (4) tries to rotate in the same direction as in play, thus acting as a brake, preventing tape sag. If you depress the rewind button during the rewind mode, the device enters the stop mode for a moment and then immediately, as pinch roller (2) presses against capstan motor shaft (1), reenters the reverse FR picture search mode (same as the reverse picture search mode) as long as the rewind button is kept depressed.

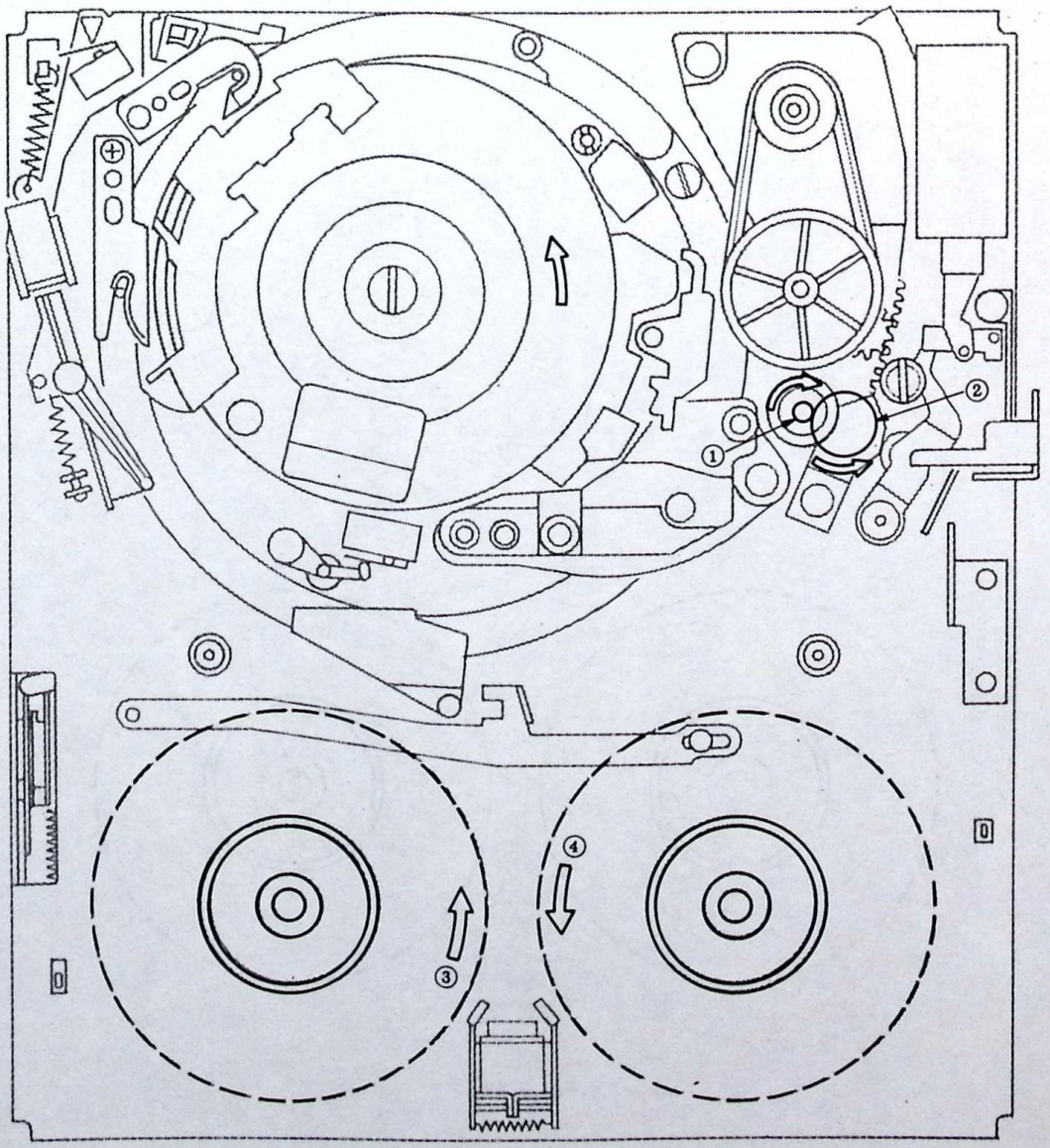

Fig. 5-12.

5-8. PAUSE

Fig. 5-13 shows the operation of the mechanical section during pause. This mode operates only in play, recrod, and dubbing modes.
The rotation of the capstan motor axis ① stops, as well as the pinch roller ② . The S and T reels ③ and ④ also stop rotating. This is not caused by the brakes applied to the reel motors. A tape tension balances the motion of the S and T reels ③ and ④ , which try to rotate in opposite directions, causing the tape to stop while contacting the drum under a fixed tension. This is the manner in which still pictures are displayed.

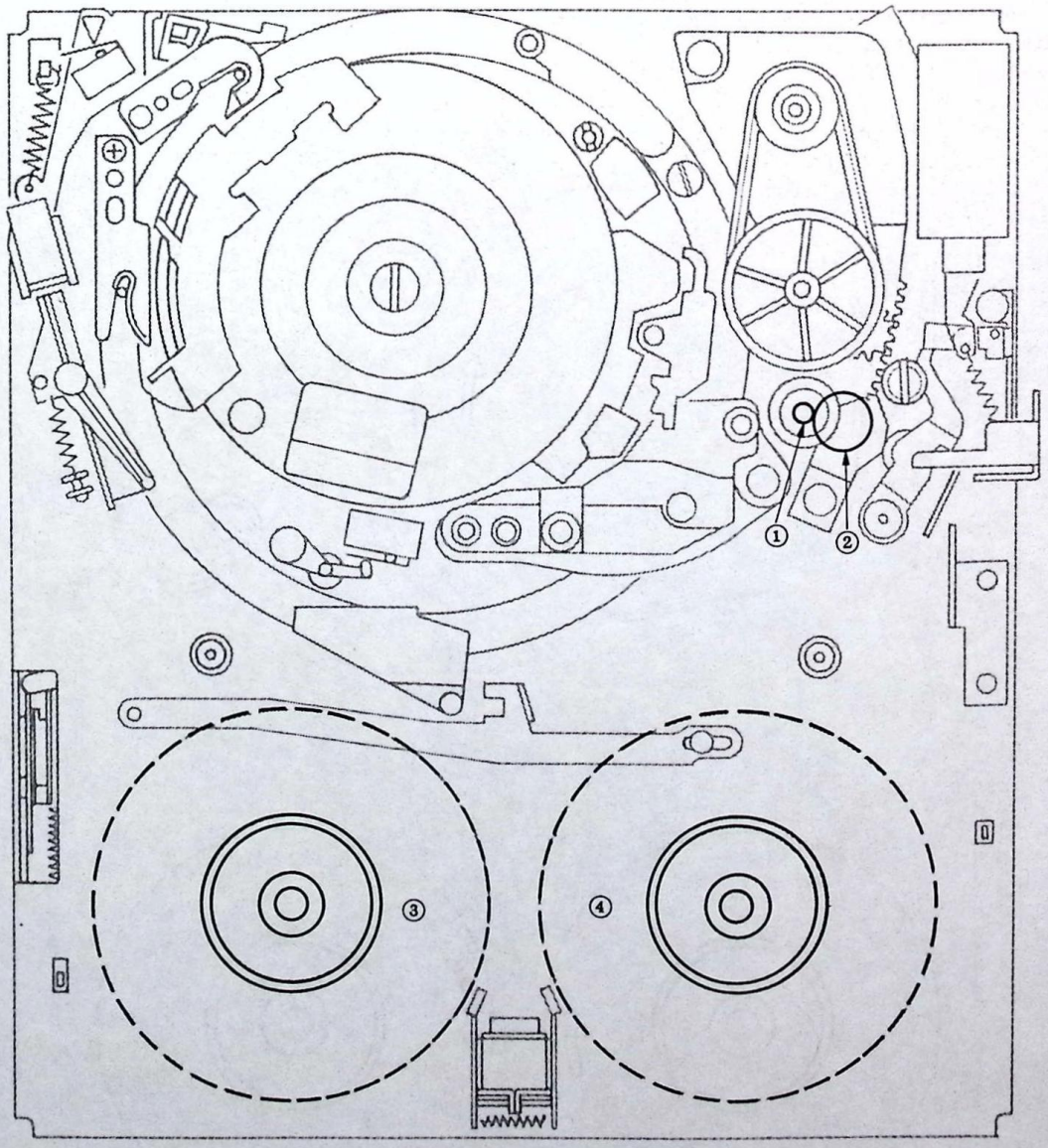

Fig. 5-13.

5-9. RECORDING

Fig. 5-14 and 5-15 show how the mechanisms operate during recording.

As brake solenoid (3) attracts brake shoes (5) and (6) in the direction of the arrow during recording mode, brake is released and S-reel (7) and T-reel (8) rotate in the directions of the arrows. If no tape is loaded, S-reel motor (7) rotates in the reverse direction to that when the tape travels forward, in order to let the tape extend tight with an appropriate back tension.

This sequence may be seen in Fig. 5-15 which shows the chassis viewed from its bottom side.

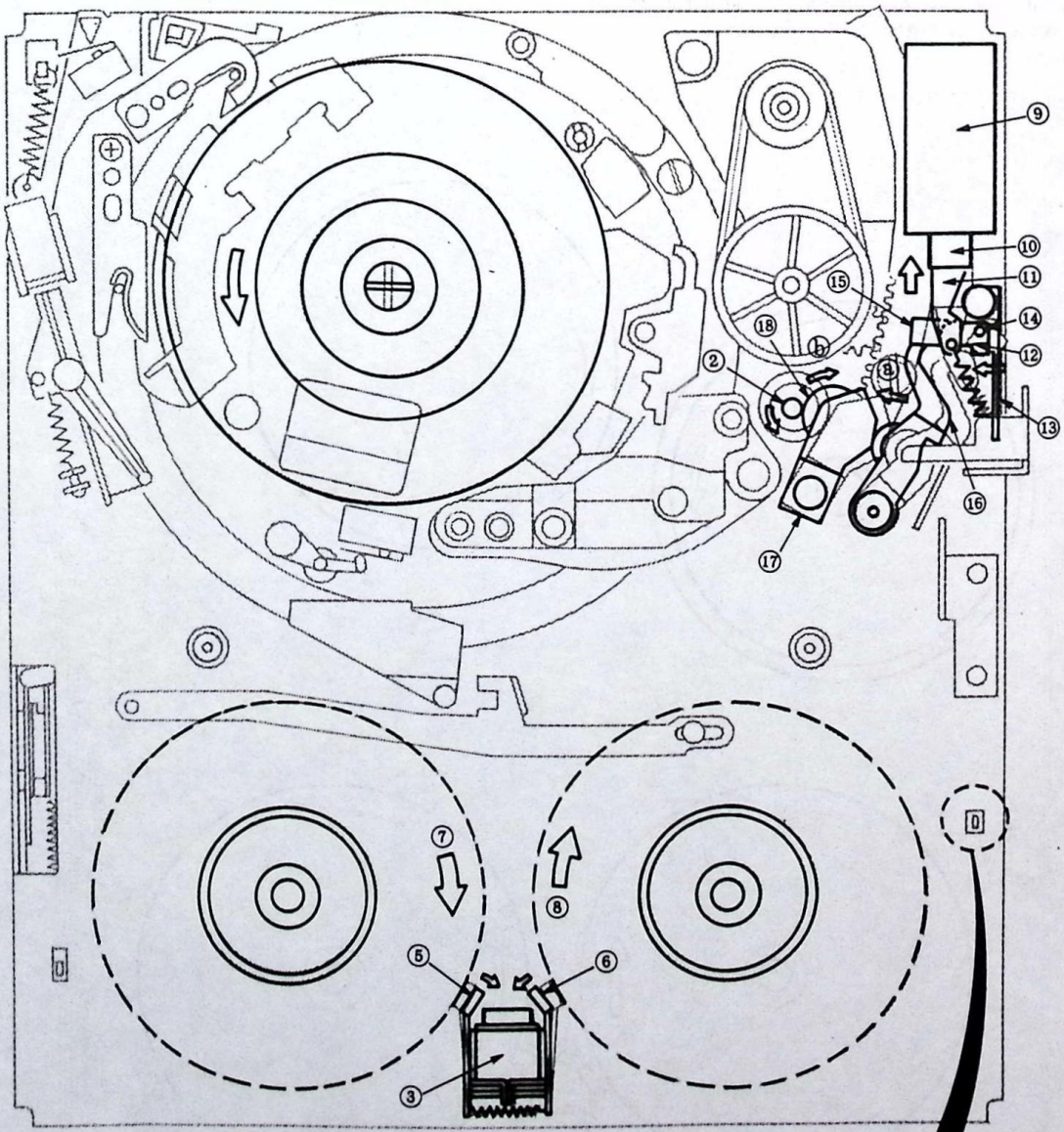

Fig. 5-14.

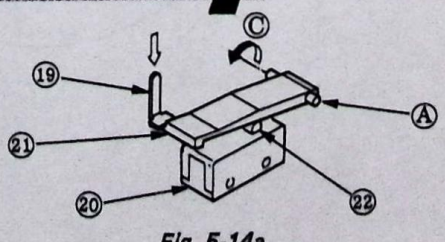

Fig. 5-14a

As pinch solenoid (9) attracts plunger (10) , pinch solenoid arm (11) pulls PL link (12) so that it rotates around shaft (14) of pinch limiter arm (13) in the direction of the arrow, thereby pushing pinch pressure arm (16) in the direction of arrow (a) via pressure arm link (15) . Pinch roller arm assembly (17) , pushed by pinch pressure arm (16) , presses against capstan motor shaft (2) in the direction of arrow (a) on the other side of the tape. Pinch roller (18) of pinch roller arm assembly (17) rotates in the direction of arrow (b) according as capstan motor shaft (2) rotates in order to let the tape travel steadily.

If the write-protect notch on the back of the cassette is removed, the cassette does not press MR probe (19) and microswitch (20) does not operate and therefore recording mode will not be enterd even if you depress the record button.

When the cassette pushes down MR probe (19) , MR arm (21) rotates around shaft (A) in the direction of arrow (C) (see Fig. 5-14a).

As MR arm (21) rotates, it pushes contact (22) of microswitch (20) and the device enters the recording mode.

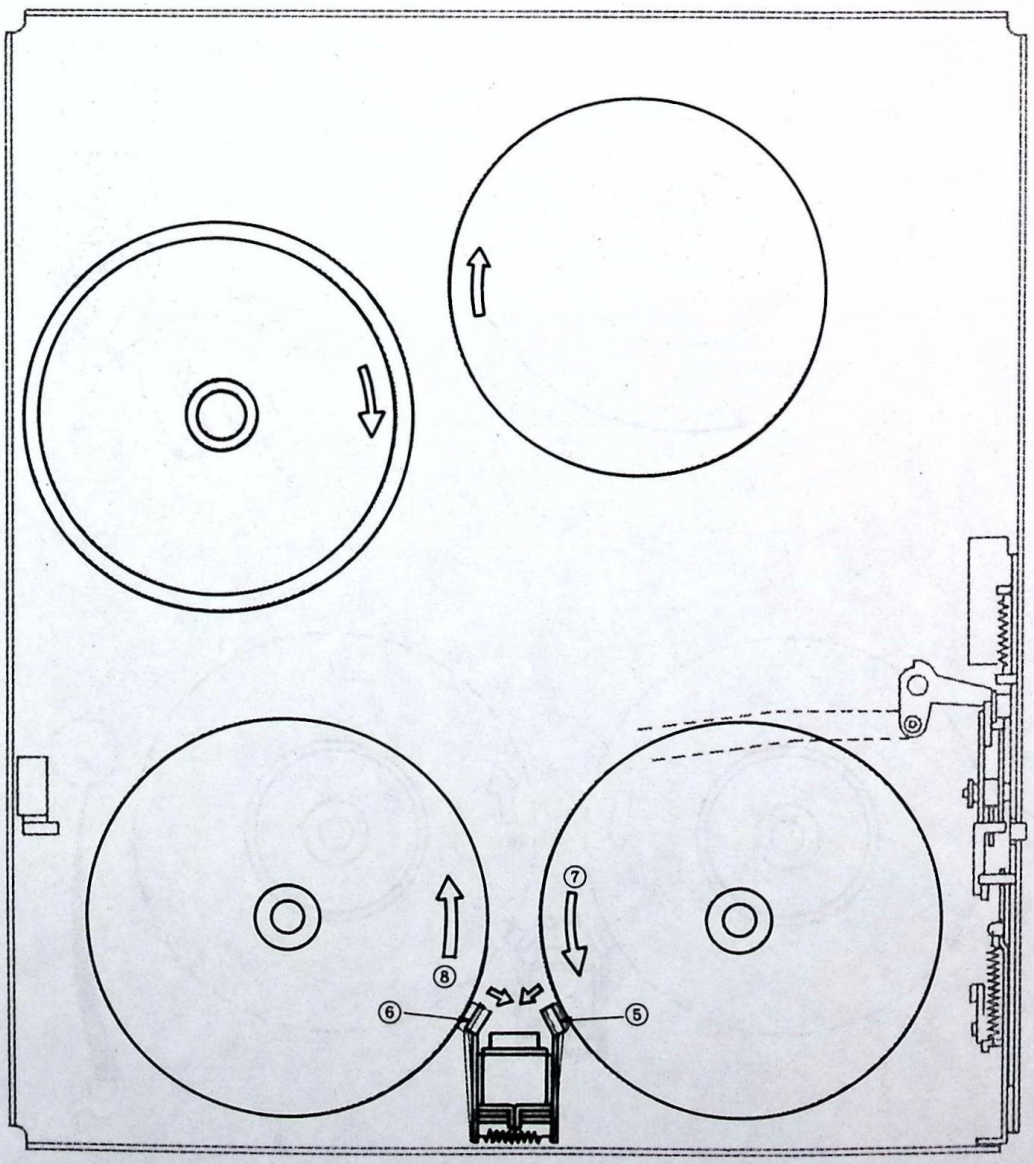

Fig. 5-15.

5-10. EJECT

Fig. 5-17 and 5-18 show operations of the mechanical section during cassette eject. Threading motor (1) rotates in the direction of the arrow when the EJECT button is pressed. This rotation is transmitted to the gear pulley (3) by a rubber belt (2) , and gears D and F (4) and (5) rotate in the direction shown. When gear D 4 rotates, the threading ring (6) rotates in the direction of the arrow. The slider gear assembly (7) moves in the direction of the arrow by the rotation of gear F 5 .

The notch of section (A) moves as the threading ring (6) rotates, and the lock arm assembly (B) is pushed in the direction shown while the TP assembly (9) also moves in the direction shown.

When roller (11) mounted on the unthreading end switch arm (10) drops into the detent of section (B) , the actuator of the unthreading end switch (12) moves in the direction indicated turning off the unthreading end switch (12) .

Movement of the slider gear assembly (7) pushes the IL slide plate (19) into section (D) , and the release lever (13) is pushed in the direction shown by the arrow. The release slide plate (14) is moved and the cassette container lock is unlocked, thus allowing the cassett container to lift.

Unthreading is completed when the threading ring (6) and slider gear (7) return in the threading direction, turning off the unthreading end switch.

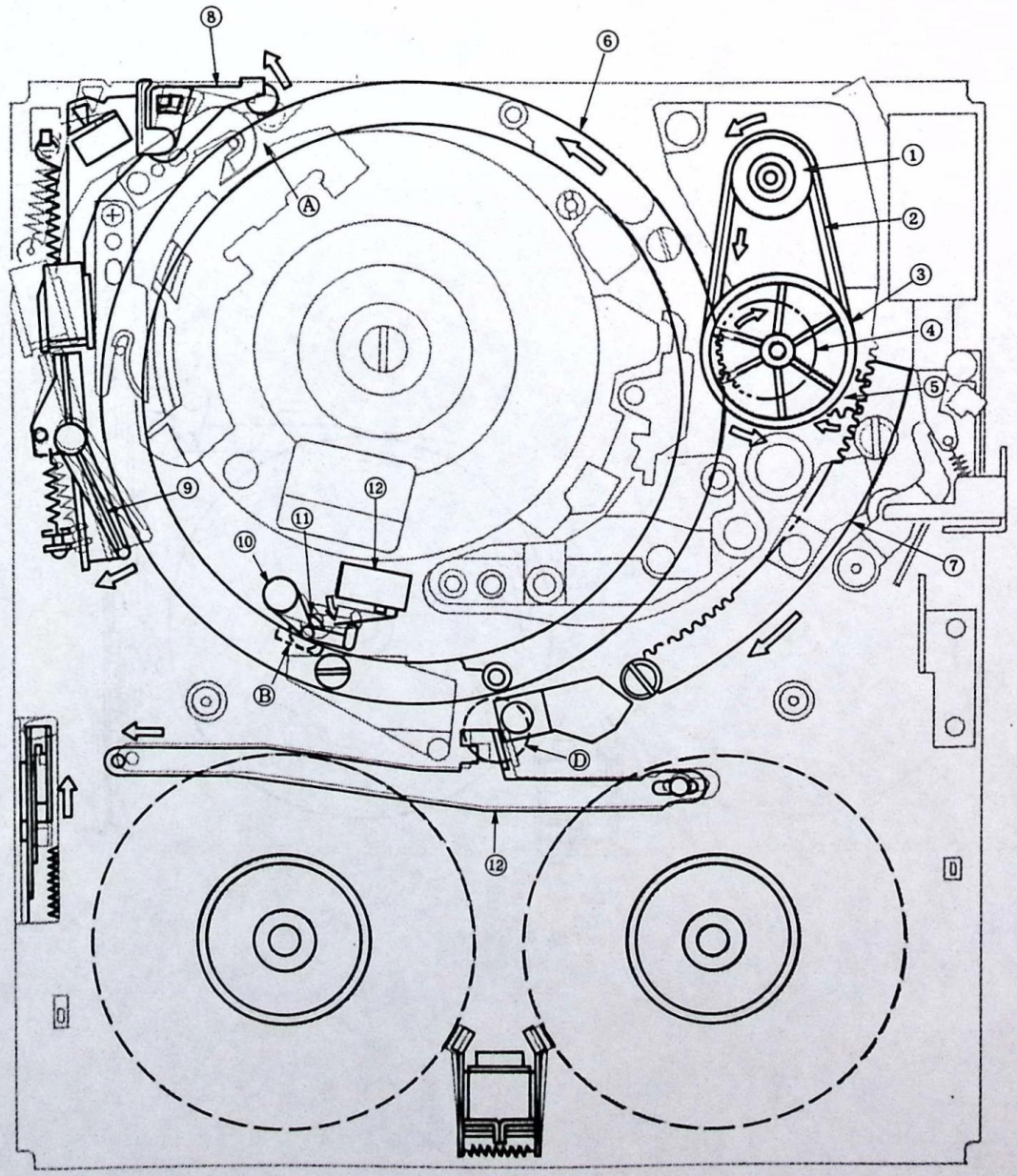

Fig. 5-17.

As for tape movement, the solenoid (15) pulled the brake sues (16) , (17) in during the operations of the threading ring (6) and slider gear (7) , releasing the brake. The S reel (18) starts rotating to take up the tape.

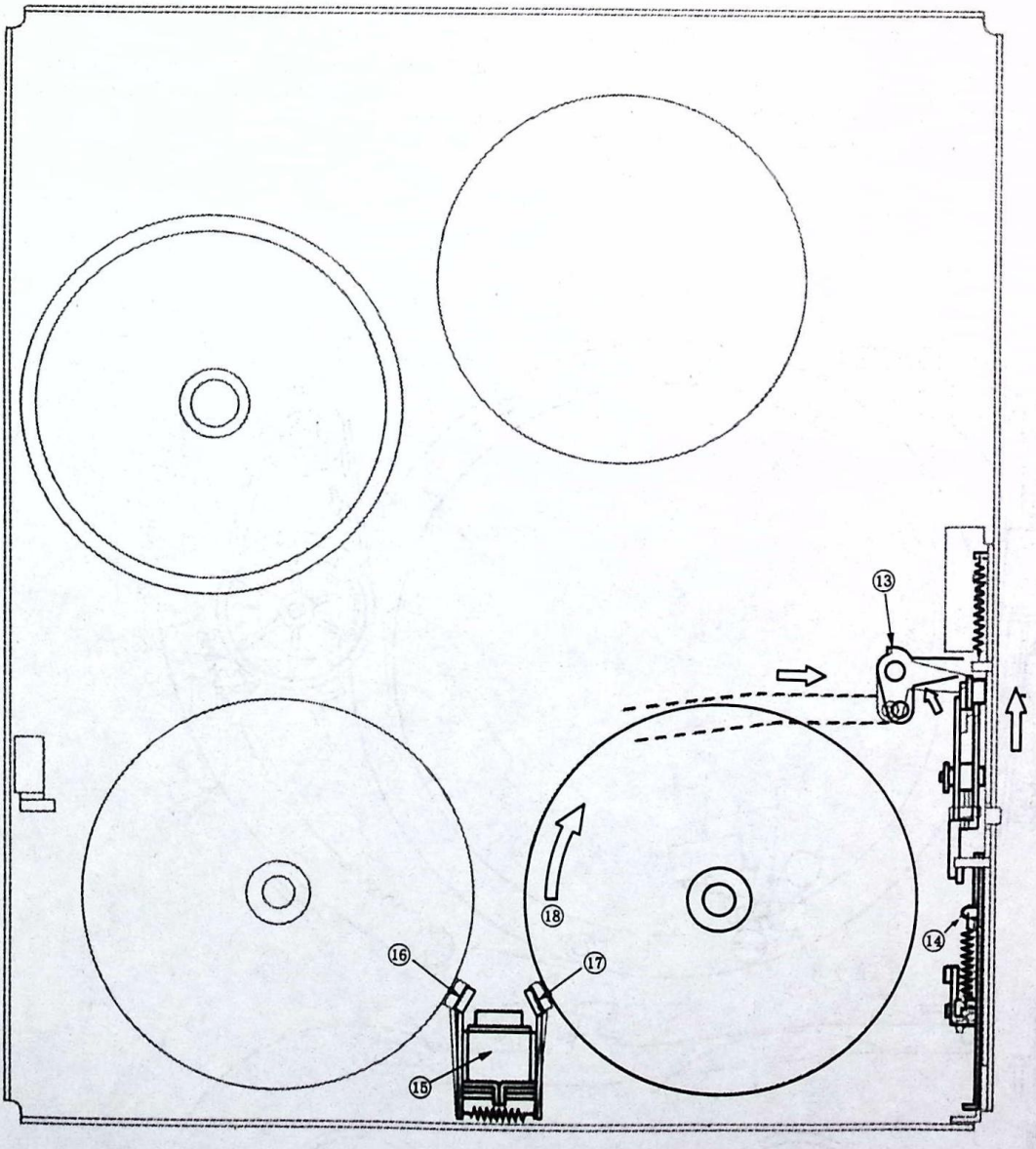

Fig. 5-18.

5-11. FUNCTION KEY (MODE) MATRIX

The following table shows button operations of this equipment and changes to various modes. Those marked "X" in the table show that there will be no change from the present mode. The items indicated in the table show that changes from the present mode to the mode instructed will be possible.

Function Key (Mode) Matrix Table

Present Mode \ Change Mode	PLAY	▶▶ FF *1	◀◀ REW *1	● REC	■ STOP	❚❚ PAUSE	◀ REVERSE PLAY *2	▲ ■ EJECT	TAPE RETURN	COUNT RESET
▶ PLAY	X	PICTURE SEARCH (F)	PICTURE SEARCH (R)	X	STOP	PAUSE	REVERSE PLAY	EJECT	X	X
▶▶ FF	PLAY	FR PICTURE SEARCH (F)	REW	X	STOP	X	X	EJECT	X	X
◀◀ REW	PLAY	FF	FR PICTURE SEARCH (R)	X	STOP	X	X	EJECT	X	X
● REC	X	X	X	X	STOP	PAUSE	X	X	X	X
■ PAUSE	PLAY	FF	REW	REC PAUSE	X	X	REVERSE PLAY	EJECT	FF REW	X
❚❚▶ PB PAUSE	X	X	X	REC PAUSE	STOP	PLAY	REVERSE PLAY	EJECT	X	X
❚❚● REC PAUSE	X	X	X	X	STOP	REC	X	X	X	X
◀ REVERSE PLAY	PLAY	X	X	X	STOP	PAUSE	X	EJECT	X	X
▲ ■ EJECT	X	X	X	X	X	X	X	X	X	X
TAPE RETURN	PLAY	FF REW	REW FF	X	STOP	X	X	EJECT	X	STOP

*1: F and R Picture Search are turned on only when the pushbutton are pressed.

*2: Reverse Play is turned on only when the wireless remotecontrol is used.

7-6. OTHERS

6-1. REMOTE CONTROL CIRCUIT

This equipment comes with wired remote control attached with MIC, and PB, STOP, FF, REW, and PAUSE functions can be remote controlled. IC1 (μPD652C-035) is used for remote control signal processing. This is a microcomputer to generate SCO codes. A total of 64 SCO codes can be generated by an 8 x 8 input matrix. In principle, double pressing of keys is prohibited, and the previous code is kept output until all the keys are released. In operation, seven-bit codes corresponding to the key matrix input are input to Pin (15) of IC1 ($\overline{SCO}$) on the FD-3 Board, and the mode for which the key is pressed is input. The pin configuration is shown below.

Pin No.	Symbol	Operation
1	CL1	Clock oscillation
2	KI5	Matrix input
3	KI6	Matrix input
4	KI7	Matrix input
5	KI8	Matrix input
6	INH	Key is valid with "L", invalid with "H"
7	F1	1 REC mode is set up with "L", 2 REC mode of REC and PB is set up with "H"
8	F2	Priority is given to first pressed with "L", priority is given to last pressed only in FF and REW with "H"
9	LAMP	Flickers at intervals of 90 ms while $\overline{SCO}$ is output
10	KO1	Matrix output
11	KO2	Matrix output
12	KO3	Matrix output
13	KO4	Matrix output
14	Vcc	5V
15	TEST	Make sure to connect to 5 V
16	KO5	Matrix output
17	KO6	Matrix output
18	KO7	Matrix output
19	KO8	Matrix output
20	SCO	SCO output positive polarity
21	KI1	Matrix input
22	KI2	Matrix input
23	KI3	Matrix input
24	KI4	Matrix input
25	$\overline{INT}$	Connect to 5 V
26	RES	RESET with "H"
27	Vss	OV
28	CLo.	Clock oscillation

6-2. PINCH PLUNGER EMERGENCY RELEASE CIRCUIT

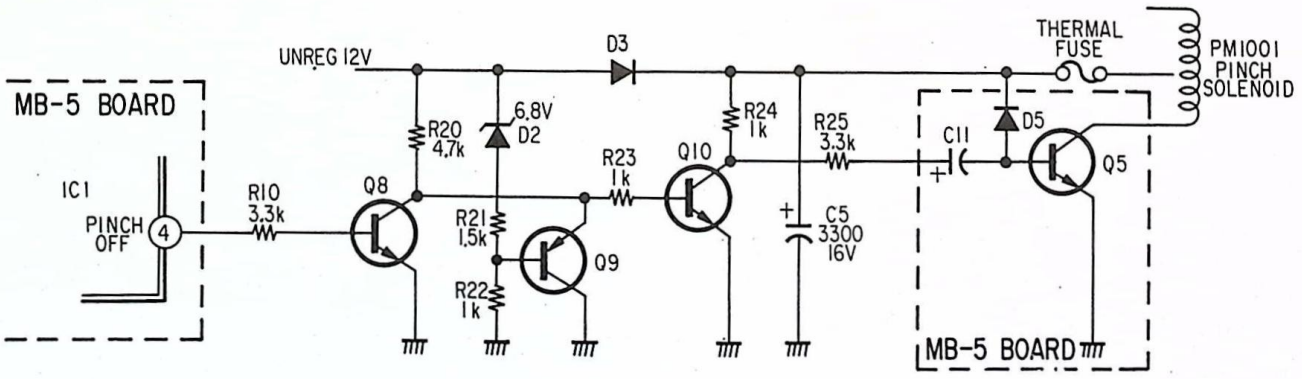

The pinch plunger emergency release circuit is shown above. In normal pinch OFF operation, the level of Pin (4) of IC1 (PINCH OFF) becomes "H" to turn ON Q8. As a result, Q10 turns OFF and Q5 turns ON, with the current from UNREG 12 V switching off the pinch solenoid and flowing to Q5. Next, circuit operation in an emergency state, that is, when AC power is exhausted, is described.

COM 12 V of the plunger is backed up by C5, and Q10 is in an ON state, while Q5 is in an OFF state. Q9 is momentarily switched on by the anti-reverse current diode D3 for the discharge current of C5 and by the 6.8 V Zener diode D2, and A10 is turned off while Q5 is turned on as a result. The pinch plunger is always released even when UNREG 12 V is exhausted.

6-3. BUZZER OSCILLATION CIRCUIT

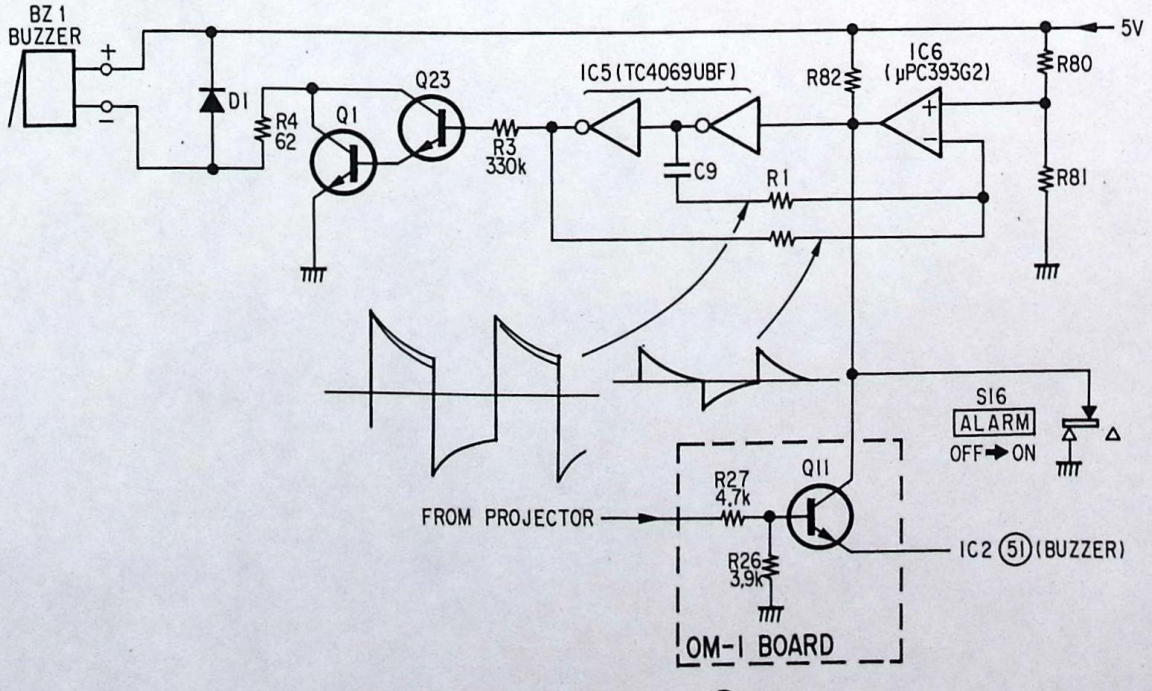

The buzzer oscillation circuit and waveforms of it are shown above. The buzzer is of a compact winding type. Normally, Q11 is turned ON, and oscillation is not performed. When a function key of the VTR is pressed, a serial code is output from Pin (51) of IC2, and the buzzer oscillation circuit opens to start oscillation and to output a sound from the buzzer. When a function key on the projector is pressed, Q11 is switched off, the buzzer oscillation circuit functions, and a sound is output.

SECTION 8
DIAGRAMS
(Projector:FP-60/62)

TABLE OF CONTENTS

Section	*Title*	*Page*
8.	**DIAGRAMS**	
8-1.	Block Diagram	8-1
8-2.	Circuit Boards Location	8-5
8-3.	Flame Schematic Diagram	8-9
8-4.	Schematic Diagrams and Printed Wiring Boards	
	BA Board	8-11
	A, MA, MB and MC Boards	8-15
	UA, UB, BB and C Boards	8-23
	P and T Boards	8-31
	D, GA, GB and V Boards	8-39
8-5.	Semiconductors	8-46

SECTION 8
DIAGRAMS

8-1. BLOCK DIAGRAM

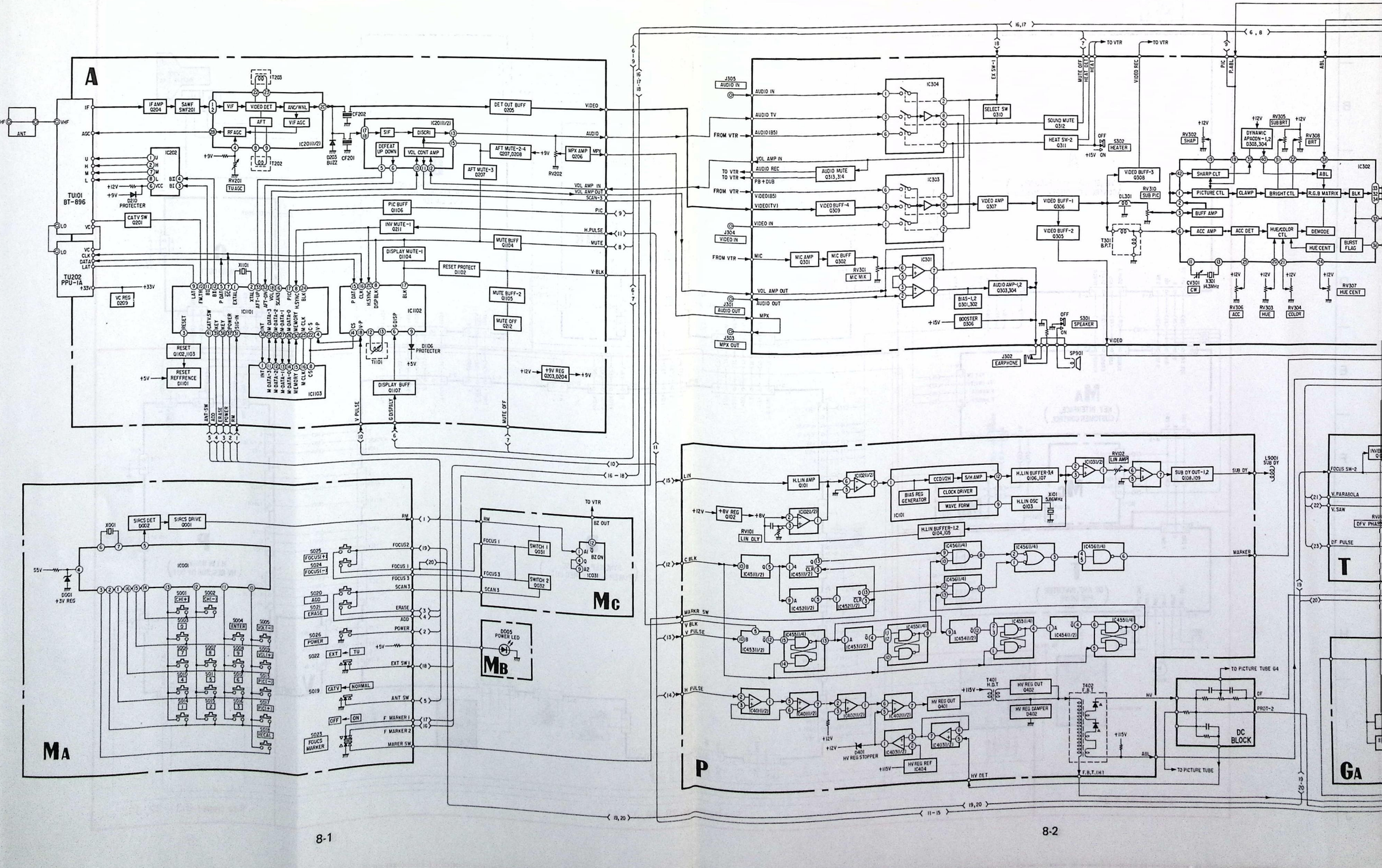

8-1

8-2

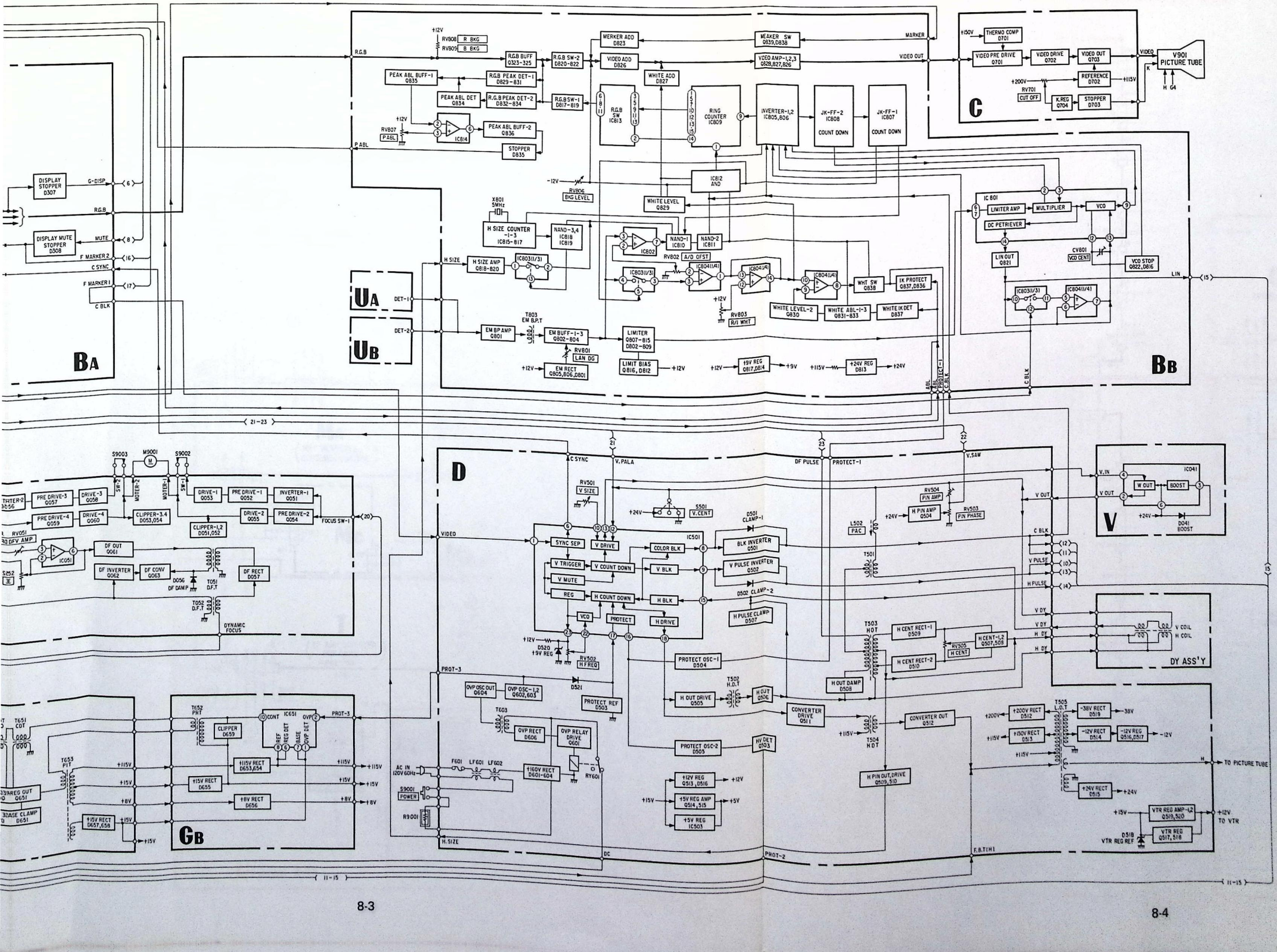

BA
BB
C
D
V
GB
UA
UB
DY ASS'Y
V901 PICTURE TUBE
DISPLAY STOPPER D307
DISPLAY MUTE STOPPER D308
R.G.B BUFF Q323-325
R.G.B SW-2 D820-822
R.G.B SW-1 D817-819
R.G.B SW IC813
RING COUNTER IC809
INVERTER-1,2 IC805,806
JK-FF-2 IC808 COUNT DOWN
JK-FF-1 IC807 COUNT DOWN
MERKER ADD D823
VIDEO ADD D826
WHITE ADD D827
MEAKER SW Q839,D838
VIDEO AMP-1,2,3 Q828,827,826
THERMO COMP D701
VIDEO PRE DRIVE Q701
VIDEO DRIVE Q702
VIDEO OUT Q703
REFERENCE D702
K.REG Q704
STOPPER D703
PEAK ABL BUFF-1 Q835
PEAK ABL DET Q834
PEAK ABL BUFF-2 Q836
STOPPER D835
IC814
IC812 AND
WHITE LEVEL Q829
H SIZE COUNTER -1-3 IC815-817
NAND-3,4 IC818 IC819
H SIZE AMP Q818-820
NAND-1 IC810
NAND-2 IC811
IC802
IC801
LIMITER AMP
MULTIPLIER
VCO
DC PETRIEVER
LIN OUT Q821
VCO STOP Q822,D816
WHT SW Q838
IK PROTECT Q837,D836
WHITE LEVEL-2 Q830
WHITE ABL-1-3 Q831-833
WHITE IK DET D837
EM BP AMP Q801
EM BUFF-1-3 Q802-804
EM RECT Q805,806,D801
LIMITER Q807-815 D802-809
LIMIT BIAS Q816,D812
+9V REG Q817,D814
+24V REG D813
PRE DRIVE-3 Q057
DRIVE-3 Q058
PRE DRIVE-4 Q059
DRIVE-4 Q060
CLIPPER-3,4 D053,054
DRIVE-1 Q053
PRE DRIVE-1 Q052
INVERTER-1 Q051
DRIVE-2 Q055
PRE DRIVE-2 Q054
CLIPPER-1,2 D051,052
DF OUT Q061
DF INVERTER Q062
DF CONV Q063
DF RECT D057
DYNAMIC FOCUS
SYNC SEP
V DRIVE
V TRIGGER
V COUNT DOWN
V MUTE
REG
H COUNT DOWN
VCO
PROTECT
H DRIVE
COLOR BLK
V BLK
H BLK
BLK INVERTER Q501
V PULSE INVERTER Q502
H PULSE CLAMP D507
PROTECT OSC-1 D504
PROTECT OSC-2 D505
H OUT DRIVE Q505
H OUT Q506
CONVERTER DRIVE Q511
CONVERTER OUT Q512
H PIN OUT,DRIVE Q509,510
H CENT RECT-1 D509
H CENT RECT-2 D510
H CENT-1,2 Q507,508
H OUT DAMP D508
OVP OSC OUT Q604
OVP OSC-1,2 Q602,603
OVP RECT D606
OVP RELAY DRIVE Q601
PROTECT REF D503
HV DET Q503
+12V REG Q513,D516
+5V REG AMP Q514,515
+5V REG IC503
+200V RECT D512
+150V RECT D513
-38V RECT D519
-12V RECT D514
-12V REG Q516,D517
+24V RECT D515
VTR REG AMP-1,2 Q519,520
VTR REG Q517,518
TO PICTURE TUBE
TO VTR
+115V RECT D653,654
+15V RECT D655
+8V RECT D656
+15V RECT D657,658
CLIPPER D659
IC651

8-2. CIRCUIT BOARDS LOCATION

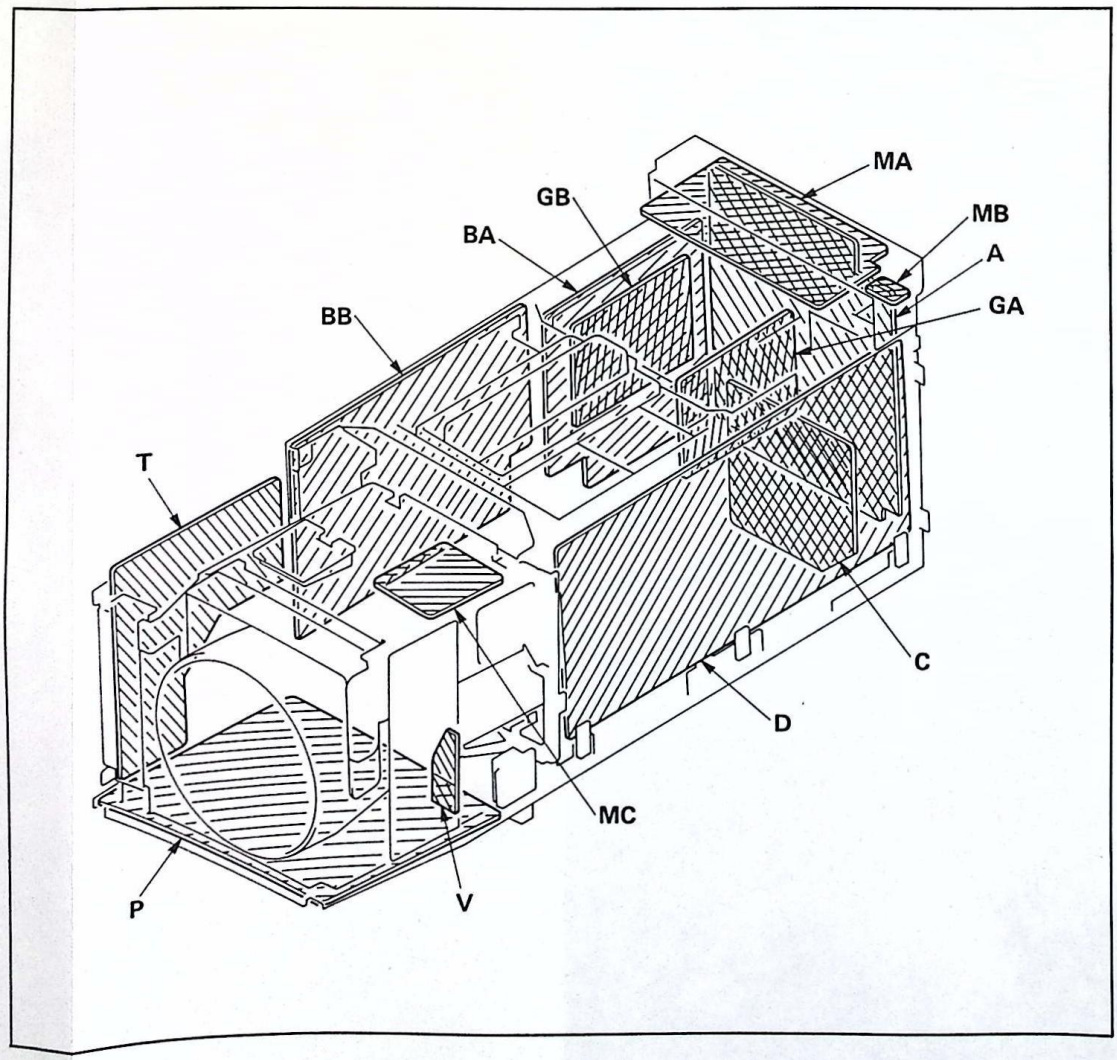

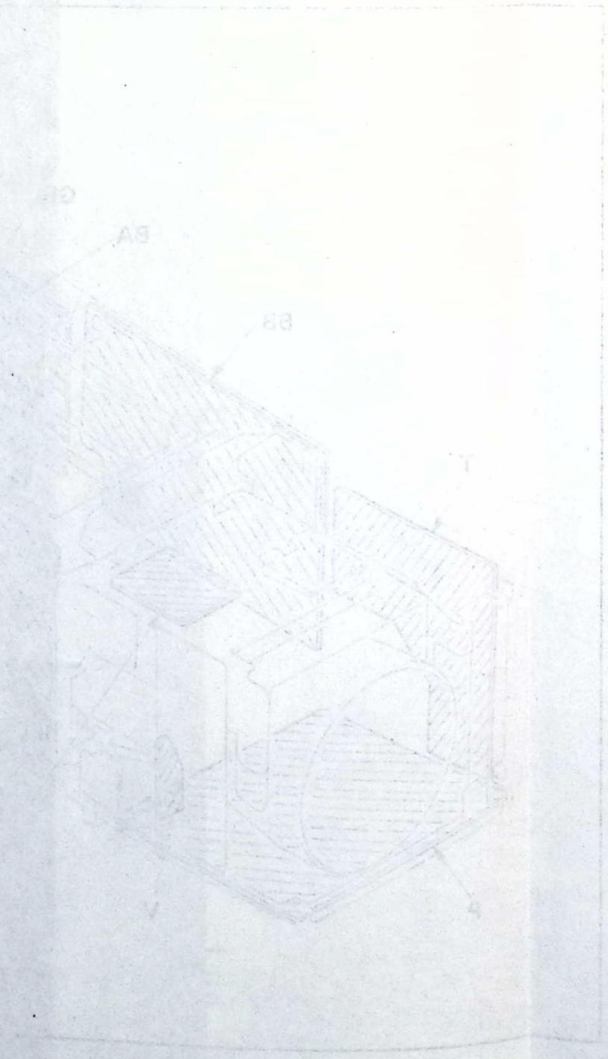

FLAME

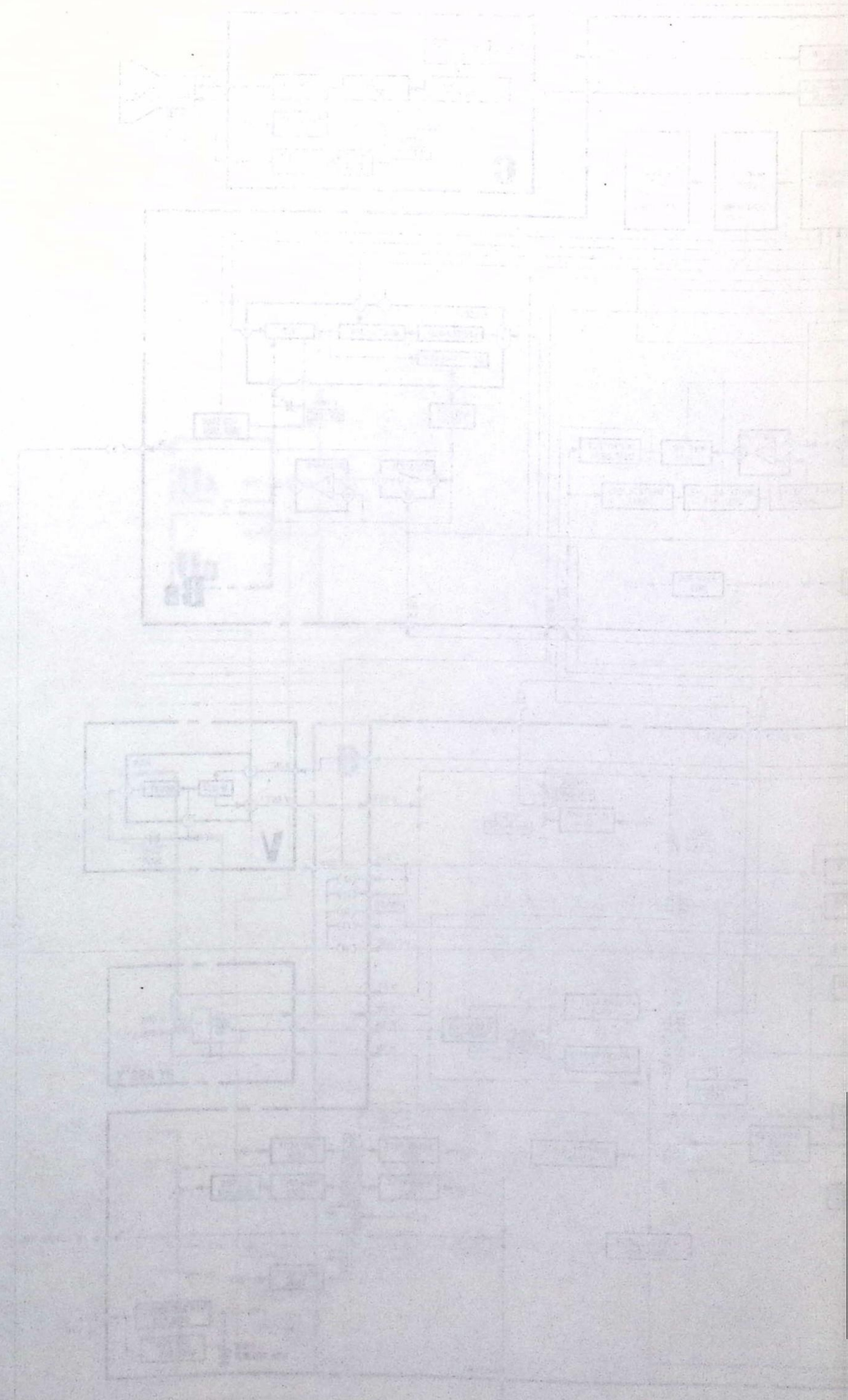

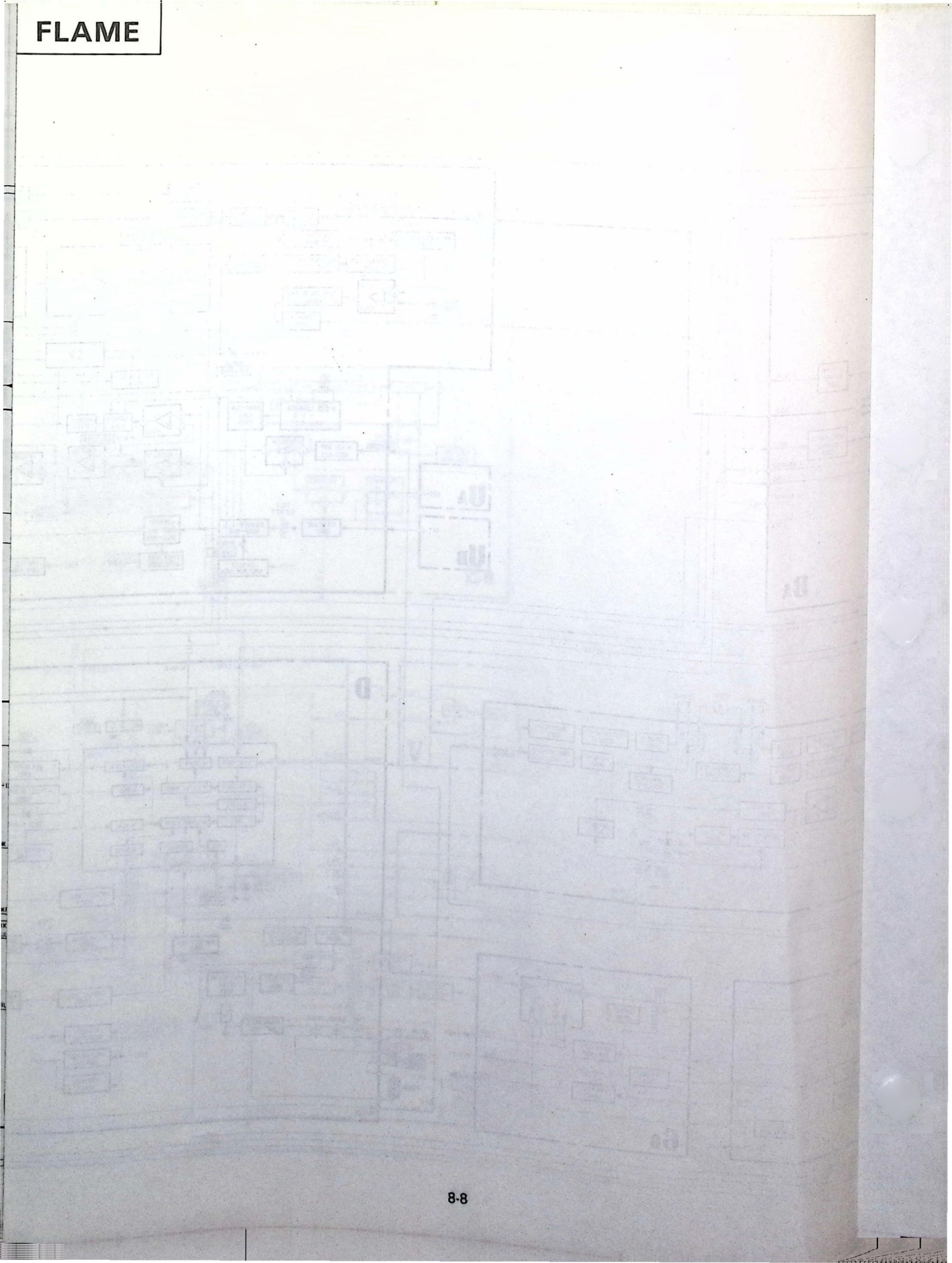

8-3. FLAME SCHEMATIC DIAGRAM

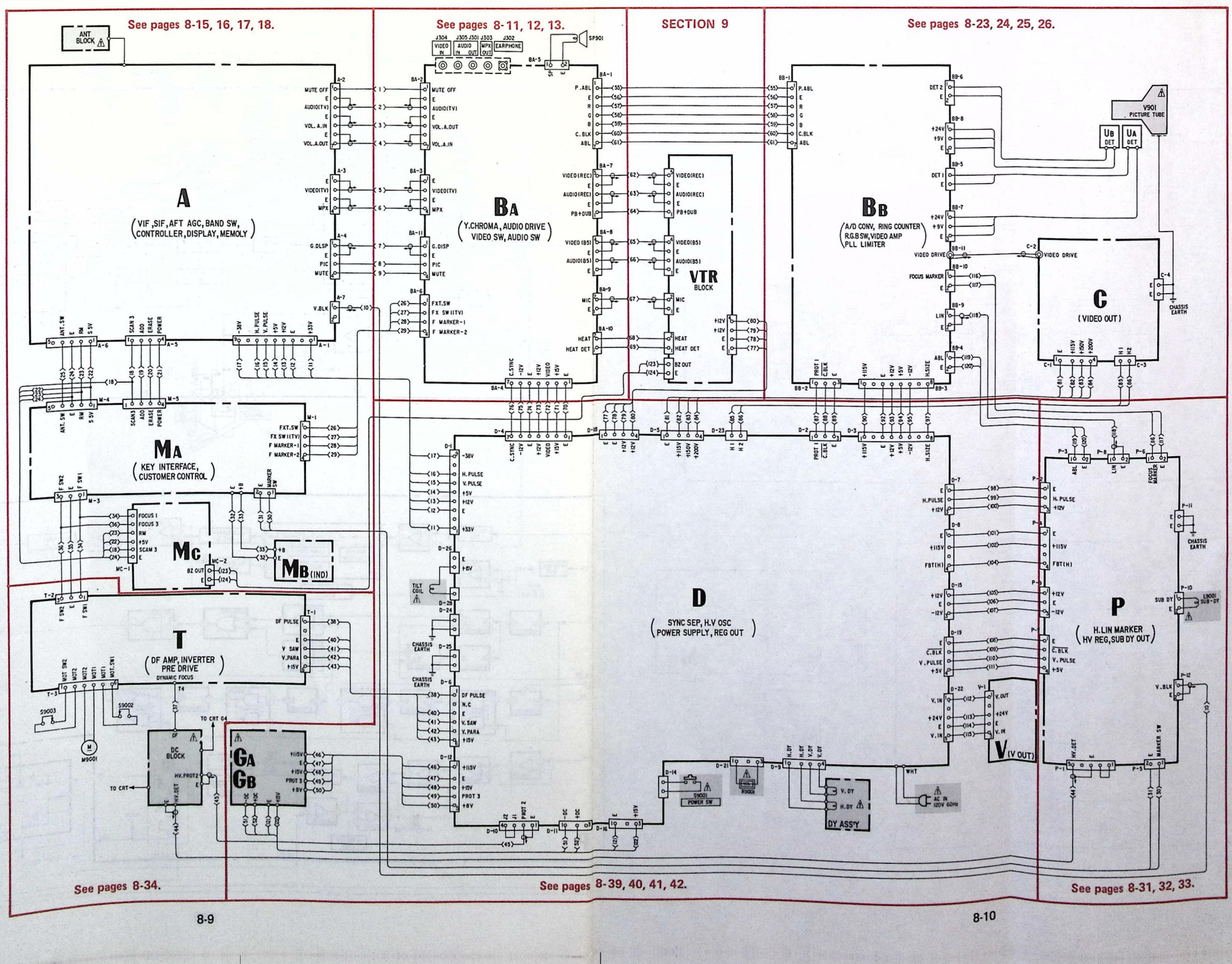

8-4. SCHEMATIC DIAGRAMS AND PRINTED WIRING BOARDS

Note: The components identified by shading and mark ⚠ are critical for safety. Replace only with part number specified.

Note:

- All capacitors are in μF unless otherwise noted. pF : μμF 50WV or less are not indicated except for electrolytics.
- All resistors are in ohms, 1/6 W unless otherwise noted. kΩ : 1000Ω, MΩ : 1000kΩ
- : nonflammable resistor.
- All variable and adjustable resistors have characteristic curve B, unless otherwise noted.
- : fusible resistor.
- △ : internal component.
- : panel designation.
- The components identified by ■ in this manual have been carefully factory-selected for each set in order to satisfy regulations regarding X-ray radiation. Should replacement be required, replace only with the value originally used.
- When replacing components identified by ◪ , make the necessary adjustments indicated. If results do not meet the specified value, change the component identified by ■ and repeat the adjustment until the specified value is achieved.
  (Refer to HV HOLD DOWN, HV REG and BEAM CURRENT HOLD DOWN adjustments on page 4-7–4-11).
- When replacing the part in below table, be suer to perform the related adjustment.

Part replaced (◪)	Adjustment (■)
HV block	HV REG (R427, R428) HV HOLD DOWN (R527, R528) BEAM CURRENT (R959)
D board complete D503, IC501, R521, R522, R523 . . . in D board	HV HOLD DOWN (R527, R528) BEAM CURRENT (R959)
P board complete R432 . . . in P board	BEAM CURRENT (R959) HV REG (R427, R428)
IC403, IC404, R417, R420, R424, R425, R426, R427, R428, R429 . . . in P board	HV REG (R427, R428)
D505, Q503, R524, R525, R526, R527, R528 . . . in D board	HV HOLD DOWN (R527.528)
D504, D516, Q513, R564, R565, R566, R582 . . . in D board R433, R434, R435, R437 . . . in P board D836, D837, Q837, R933, R956, R957, R958, R959, R960, R972, R974, R980, R982 . . in BB board BB board complete	BEAM CURRENT HOLD DOWN (R959)

- Voltages are dc with respect to ground unless otherwise noted.
- Readings are taken with a 10MΩ digital multimeter.
- : adjustment for repair.
- Readings are taken with a color-bar signal input.
- Voltage variations may be noted due to normal production tolerances.
- ——— : B+ bus.
- – – – : B– bus.
- Do not touch marked ♦ on D board with probe of digital multimeter it reset in off position the set.
- Waveforms marked are taken with 1:100 oscilloscope probe used.

BA (Y. CHROMA, AUDIO DRIVE, VIDEO SW, AUDIO SW) SCHEMATIC DIAGRAM

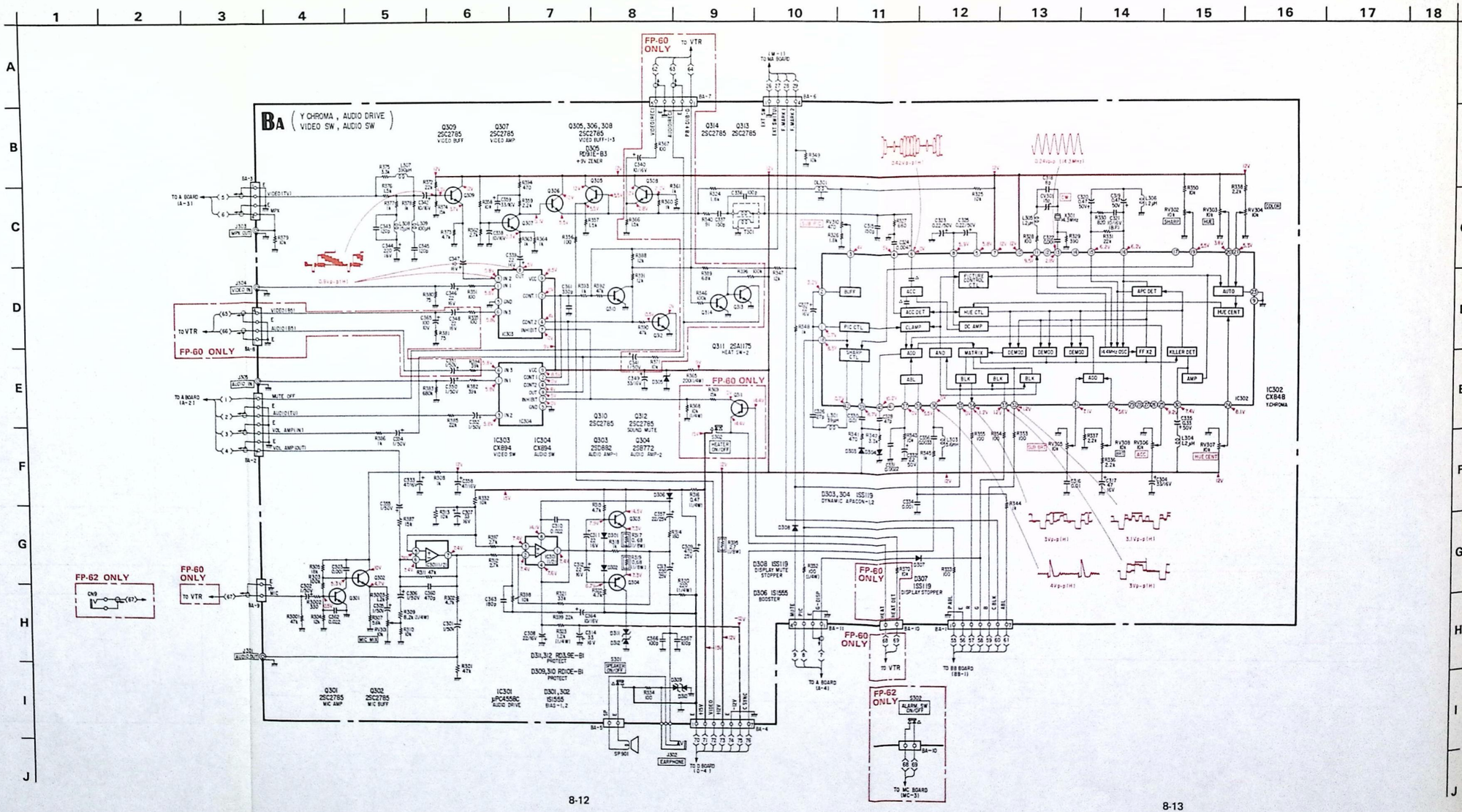

BA (Y. CHROMA, AUDIO DRIVE, VIDEO SW, AUDIO SW) PRINTED WIRING BOARDS

— BA Board —

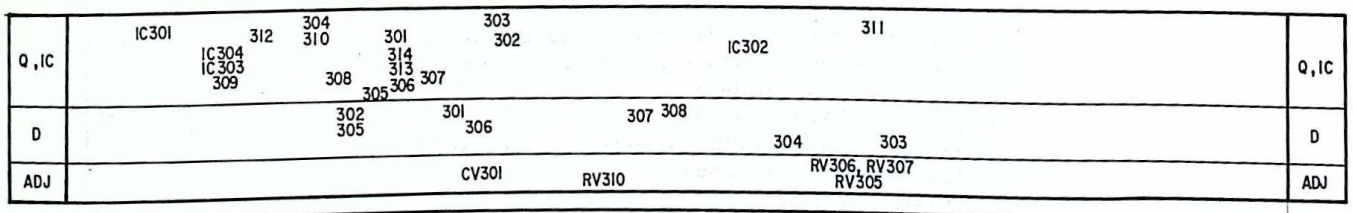

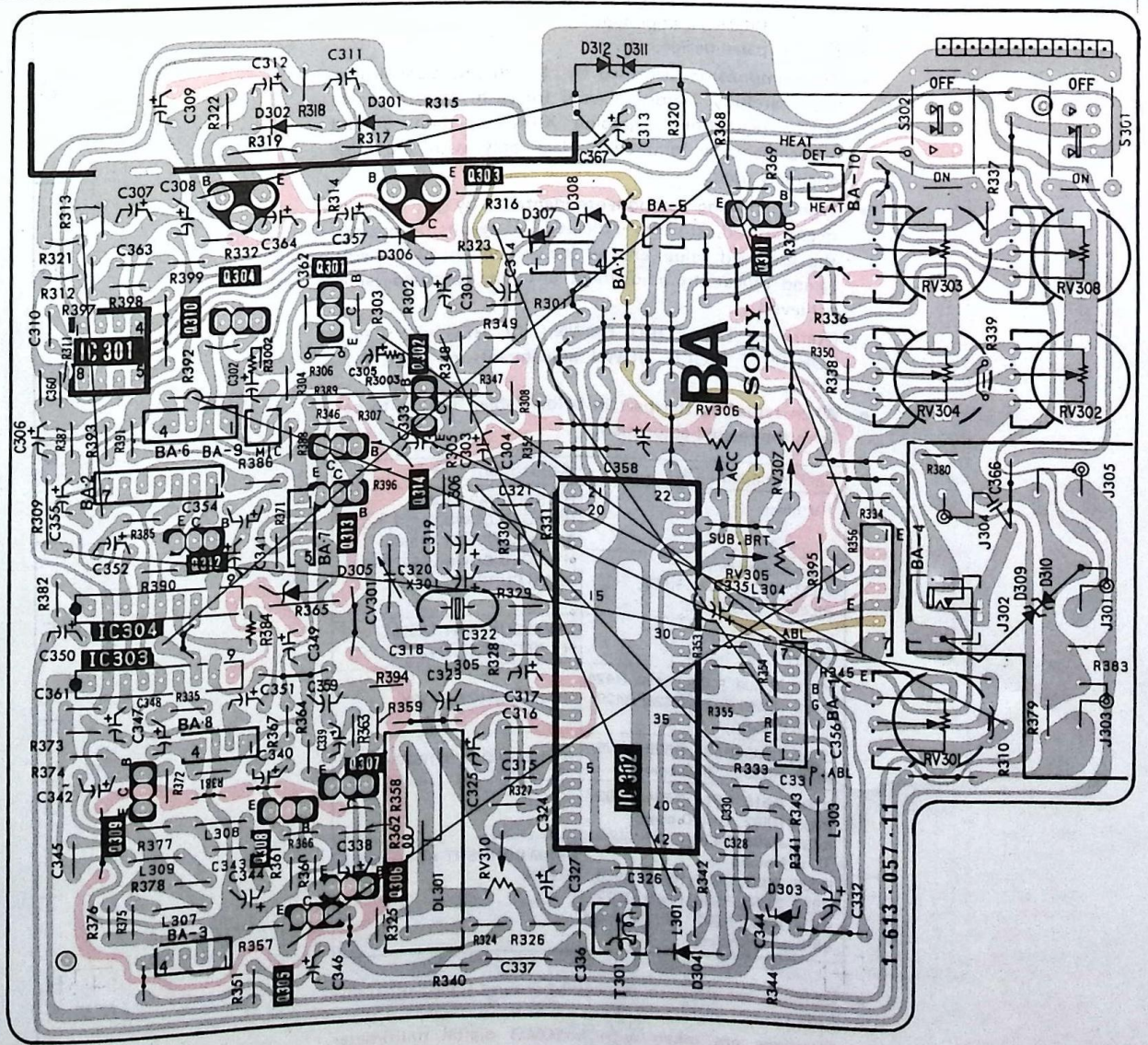

Note:

- ○— : indicates a lead wire mounted on the component side.
- ●— : indicates a lead wire mounted on the printed side.
- : soldering side
- : B+ pattern
- : B− pattern

Note: The components identified by shading and mark ⚠ are critical for safety. Replace only with part number specified.

Note:

- All capacitors are in μF unless otherwise noted. pF : μμF 50WV or less are not indicated except for electrolytics.
- All resistors are in ohms, 1/6 W unless otherwise noted. kΩ : 1000Ω, MΩ : 1000kΩ
- : nonflammable resistor.
- All variable and adjustable resistors have characteristic curve B, unless otherwise noted.
- : fusible resistor.
- △ : internal component.
- : panel designation.
- The components identified by ⊠ in this manual have been carefully factory-selected for each set in order to satisfy regulations regarding X-ray radiation. Should replacement be required, replace only with the value originally used.
- When replacing components identified by ◪ , make the necessary adjustments indicated. If results do not meet the specified value, change the component identified by ⊠ and repeat the adjustment until the specified value is achieved.
  (Refer to HV HOLD DOWN, HV REG and BEAM CURRENT HOLD DOWN adjustments on page 4-7—4-11).
- **When replacing the part in below table, be suer to perform the related adjustment.**

Part replaced (◪)	Adjustment (⊠)
HV block	HV REG (R427, R428) HV HOLD DOWN (R527, R528) BEAM CURRENT (R959)
D board complete D503, IC501, R521, R522, R523 . . . in D board	HV HOLD DOWN (R527, R528) BEAM CURRENT (R959)
P board complete R432 . . . in P board	BEAM CURRENT (R959) HV REG (R427, R428)
IC403, IC404, R417, R420, R424, R425, R426, R427, R428, R429 . . . in P board	HV REG (R427, R428)
D505, Q503, R524, R525, R526, R527, R528 . . . in D board	HV HOLD DOWN (R527, 528)
D504, D516, Q513, R564, R565, R566, R582 . . . in D board R433, R434, R435, R437 . . . in P board D836, D837, Q837, R933, R956, R957, R958, R959, R960, R972, R974, R980, R982 . . in BB board BB board complete	BEAM CURRENT HOLD DOWN (R959)

- Voltages are dc with respect to ground unless otherwise noted.
- Readings are taken with a 10MΩ digital multimeter.
- : adjustment for repair.
- Readings are taken with a color-bar signal input.
- Voltage variations may be noted due to normal production tolerances.
- ——— : B+ bus.
- – – – : B- bus.
- Do not touch marked ◆ on D board with probe of digital multimeter it reset in off position the set.
- Waveforms marked ☛ are taken with 1:100 oscilloscope probe used.

FT AGC, BAND SW, CONTROLLER, DISPLAY, MEMORY), MA (KEY INTERFACE, CUSTOMER CONTROL), MC, MB (IND) SCHEMATIC DIAGRAM

VIF, SIF MEMORY

2 3 4 5 6 7 8 9 10 11 12 13 14 15 16

A (VIF, SIF, AFT AGC, BAND SW CONTROLLER, DISPLAY, MEMORY)

Q204 2SC2839 IF AMP

IC201 CX20014A VIF SIF AFT AGC

D208 ISS119 AFT MUTE 4

D204 RD10E-N3 +9V REG REFERENCE

Q207 2SA1175 AFT MUTE 2

D207 ISS119 AFT MUTE 3

Q206 2SC2785 MPX AMP

IC1101 CX520-108N PLL CONTROLLER

D1104 ISS119 DISPLAY MUTE-1

IC1103 UPD6250C MEMORY

TO BA BOARD (BA-3)

ANT

TU 201 BT-896

Q205 2SC2785 DET OUT BUFF

IC 201

D203 RD5.6E-N1 BUZZ COMPNE SATION

Q203 2SD880 +9V REG

Q201 2SC2785 CATV SW

IC202, LA7910 BAND SW

D210 ISS119 PROTECT

TU 202 PPU-1A

D1105 ISS119 DISPLAY MUTE-2

D1102 ISS119 RESET PROTECT

D209 RD33E-B2 VC REG

Q1105 2SC2785 MUTE BUFF-2

Q212 2SC2785 MUTE OFF

Q1106 2SA1175 PICTURE BUFF

Q1102 2SA1175 RESET 2

Q211 2SC2785 INV MUTE-1

Q1103 2SC2785 RESET 1

D1101 RD3.9E-N2 REST REFERENCE

Q1104 2SC 2785 MUTE BUFF

IC1102 CX7958 DISPLAY

D1106 ISS119 PROTECT

Q1107 2SC2785 DISPLAY BOFF

TO P BOARD (P-12)

TO BA BOARD (MA-2)

TO D BOARD (D-1)

TO BA BOARD (BA-11)

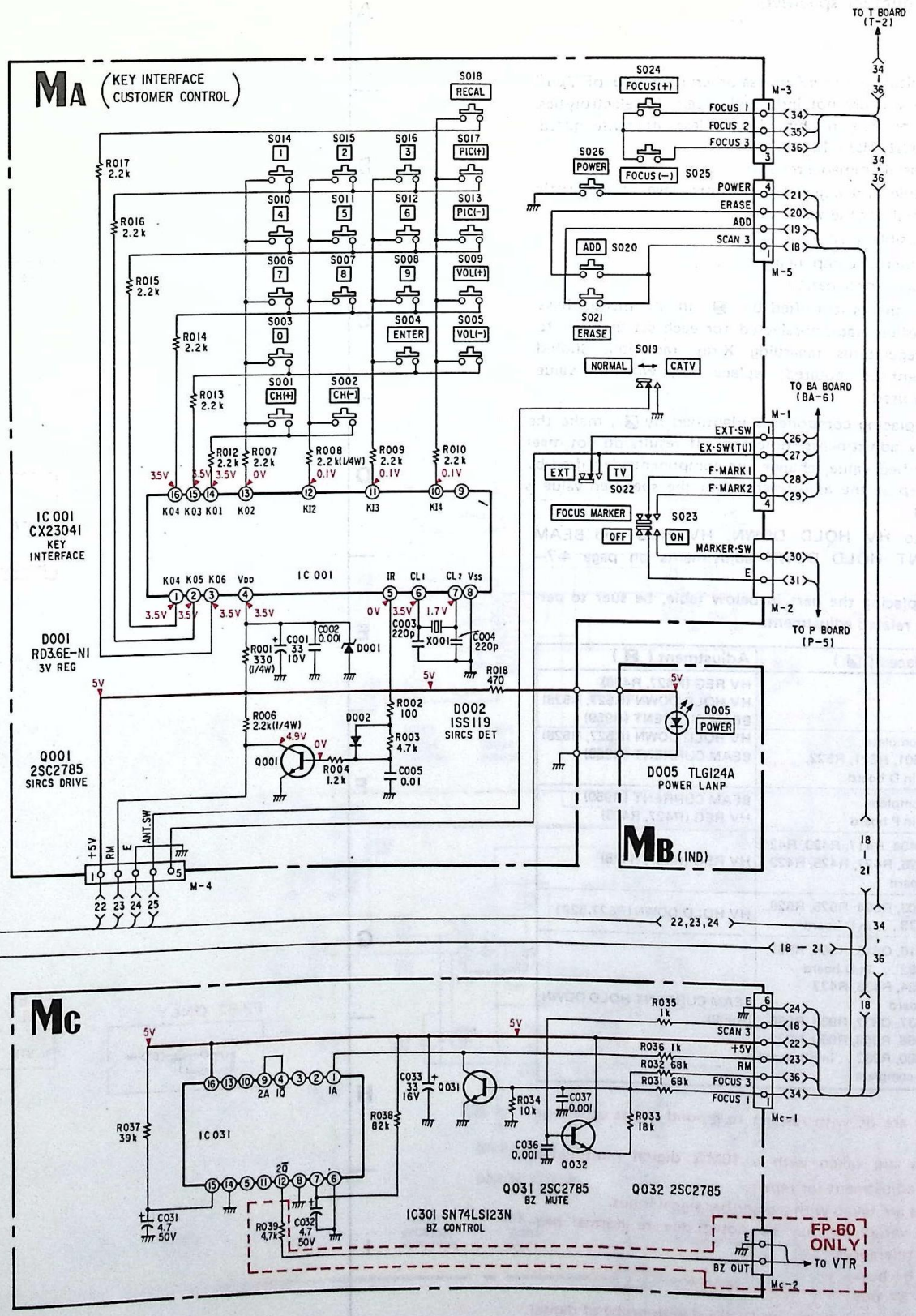
MA (KEY INTERFACE CUSTOMER CONTROL)
IC 001 CX23041 KEY INTERFACE
D001 RD3.6E-NI 3V REG
Q001 2SC2785 SIRCS DRIVE
D002 ISS119 SIRCS DET
D005 TLGI24A POWER LANP
MB (IND)
Mc
IC031
IC301 SN74LSI23N BZ CONTROL
Q031 2SC2785 BZ MUTE
Q032 2SC2785
FP-60 ONLY
TO VTR
TO T BOARD (T-2)
TO BA BOARD (BA-6)
TO P BOARD (P-5)
RECAL
ENTER
POWER
ERASE
ADD
NORMAL
CATV
FOCUS MARKER
OFF
ON
EXT
TV
FOCUS 1
FOCUS 2
FOCUS 3
SCAN 3
EXT·SW
EX·SW(TU)
F·MARK1
F·MARK2
MARKER·SW
+5V
RM
ANT.SW
BZ OUT

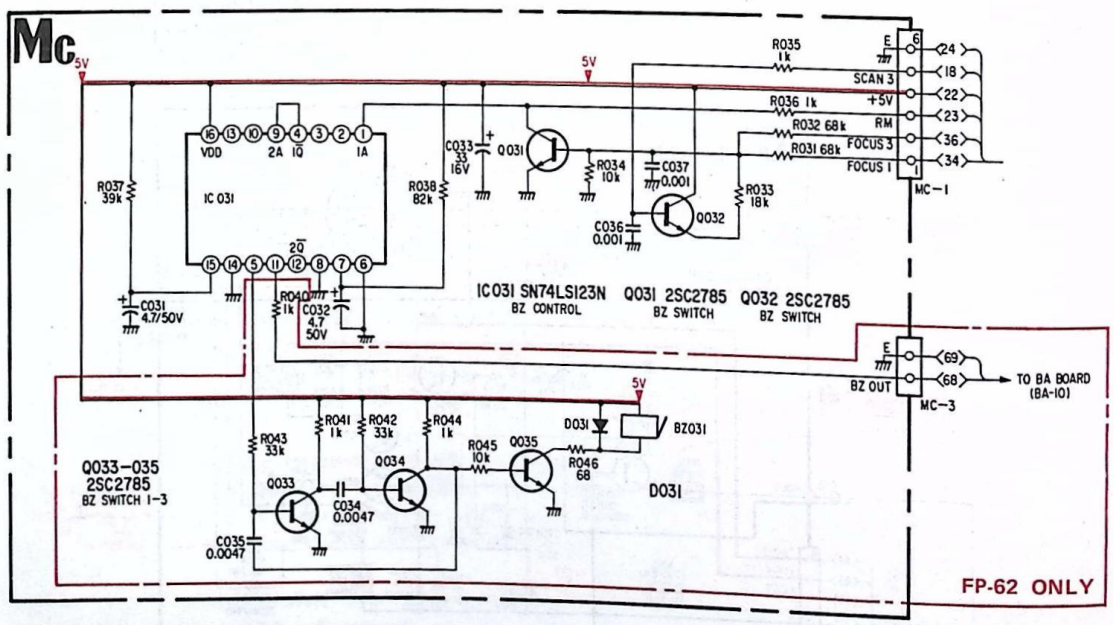
Mc
5V
R035 1k
SCAN 3
R036 1k
+5V
R032 68k
RM
R031 68k
FOCUS 3
FOCUS 1
MC-1
VDD
2A
1Q
1A
IC 031
R037 39k
R038 82k
C033 33 16V
Q031
R034 10k
C037 0.001
Q032
R033 18k
C036 0.001
C031 4.7/50V
R040 1k
C032 4.7 50V
IC031 SN74LS123N
BZ CONTROL
Q031 2SC2785
BZ SWITCH
Q032 2SC2785
BZ SWITCH
BZ OUT
MC-3
TO BA BOARD (BA-10)
R043 33k
R041 1k
R042 33k
R044 1k
R045 10k
Q035
D031
BZ031
R046 68
Q033
Q034
C034 0.0047
C035 0.0047
Q033-035
2SC2785
BZ SWITCH 1-3
D031
FP-62 ONLY

VIF, SIF MEMORY

A (VIF, SIF, AFT AGC, BAND SW, CONTROLLER, DISPLAY, MEMORY), MA (KEY INTERFACE, CUSTOMER CONT

— A Board —

| | | |

– MA Board –

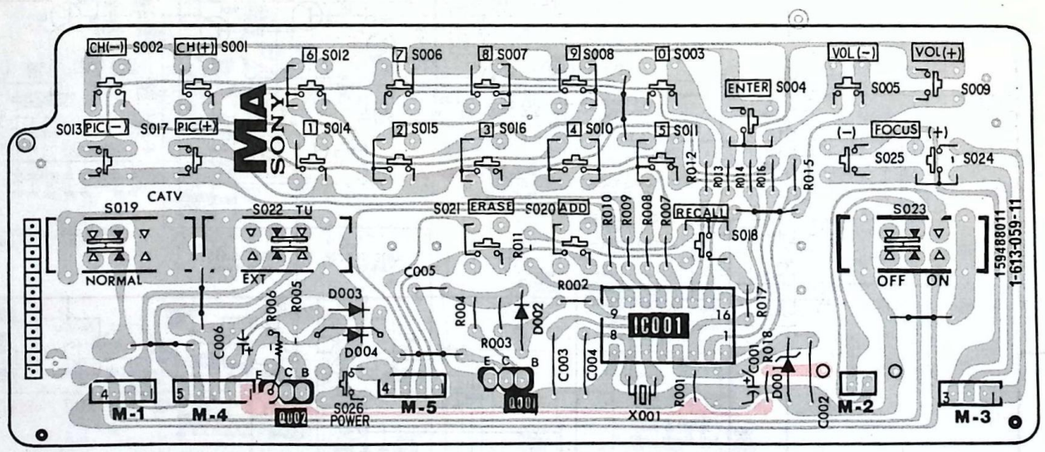

– MC Board –

Q, IC		032	031	IC031	035	033 034	Q, IC
D					031		D

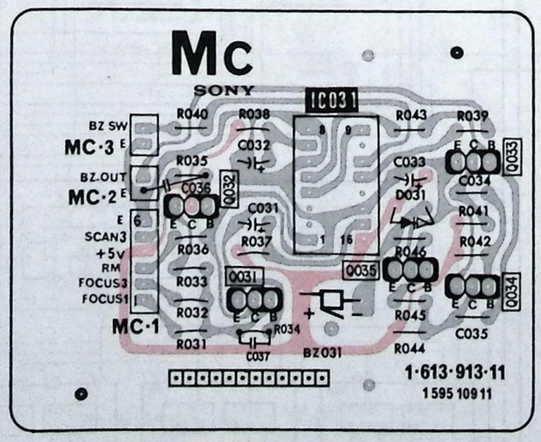

– MB Board –

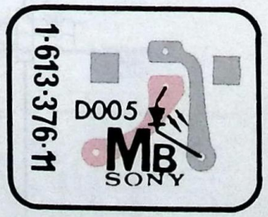

Note:
- ● ○— : indicates a lead wire mounted on the component side.
- ● ●— : indicates a lead wire mounted on the printed side.
- ● : soldering side
- ● : B+ pattern
- ● : B– pattern

Note: The components identified by shading and mark ⚠ are critical for safety. Replace only with part number specified.

Note:

- All capacitors are in μF unless otherwise noted. pF : μμF 50WV or less are not indicated except for electrolytics.
- All resistors are in ohms, 1/6 W unless otherwise noted. kΩ : 1000Ω, MΩ : 1000kΩ
- : nonflammable resistor.
- All variable and adjustable resistors have characteristic curve B, unless otherwise noted.
- : fusible resistor.
- △ : internal component.
- : panel designation.
- The components identified by ⊠ in this manual have been carefully factory-selected for each set in order to satisfy regulations regarding X-ray radiation. Should replacement be required, replace only with the value originally used.
- When replacing components identified by ◪ , make the necessary adjustments indicated. If results do not meet the specified value, change the component identified by ⊠ and repeat the adjustment until the specified value is achieved.
  (Refer to HV HOLD DOWN, HV REG and BEAM CURRENT HOLD DOWN adjustments on page 4-7—4-11).
- **When replacing the part in below table, be suer to perform the related adjustment.**

Part replaced (◪)	Adjustment (⊠)
HV block	HV REG (R427, R428) HV HOLD DOWN (R527, R528) BEAM CURRENT (R959)
D board complete D503, IC501, R521, R522, R523 . . . in D board	HV HOLD DOWN (R527, R528) BEAM CURRENT (R959)
P board complete R432 . . . in P board	BEAM CURRENT (R959) HV REG (R427, R428)
IC403, IC404, R417, R420, R424, R425, R426, R427, R428, R429 . . . in P board	HV REG (R427, R428)
D505, Q503, R524, R525, R526, R527, R528 . . . in D board	HV HOLD DOWN (R527,528)
D504, D516, Q513, R564, R565, R566, R582 . . . in D board R433, R434, R435, R437 . . . in P board D836, D837, Q837, R933, R956, R957, R958, R959, R960, R972, R974, R980, R982 . . in BB board BB board complete	BEAM CURRENT HOLD DOWN (R959)

- Voltages are dc with respect to ground unless otherwise noted.
- Readings are taken with a 10MΩ digital multimeter.
- : adjustment for repair.
- Readings are taken with a color-bar signal input.
- Voltage variations may be noted due to normal production tolerances.
- ——— : B+ bus.
- – – – : B- bus.
- Do not touch marked ♦ on D board with probe of digital multimeter it reset in off position the set.
- Waveforms marked ☛ are taken with 1:100 oscilloscope probe used.

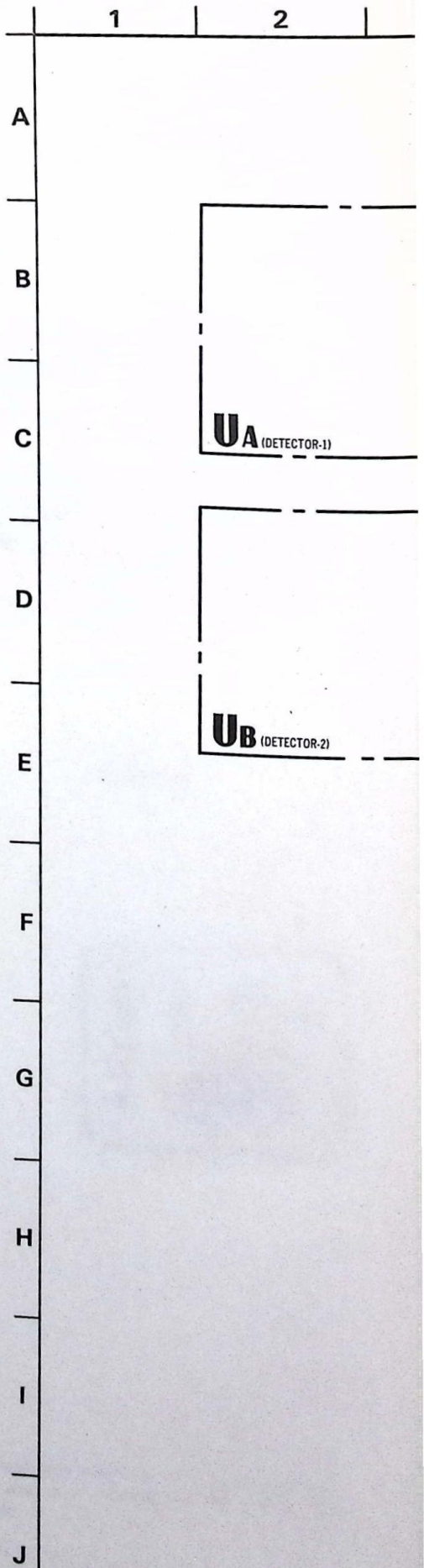

UNTER, R.G.B SW, VIDEO AMP, PLL, LIMITTER), C (VIDEO OUT) SCHEMATIC DIAGRAM

RING COUNTER, R.G.B SW

3 | 4 | 5 | 6 | 7 | 8 | 9 | 10 | 11 | 12 | 13 | 14 | 15 | 16 | 17 | 18

BB (A/D CONV, RING COUNTER R.G.B SW, VIDEO AMP PLL LIMITER)

Q803,802 2SC403C EM BUFF-2,1
Q804 2SAII75 EM BUFF-3
Q807 2SC403C LIMIT BUFF-1
Q808 2SC403C LIMIT AMP-1
Q809 2SC403C LIMIT BUFF-2
Q812 2SC403C LIMIT AMP-3
Q813 2SC403C LIMIT BUFF-4
Q814 4SC403C LIMIT AMP-4
Q815 2SC403C BUFF
Q816 2SC463C LIMIT BIAS
D812 RD6.2E-B2 LIMIT BIAS
IC801 NE564N PLL
Q821 2SC2785 LIN OUT
IC803 TC4066BP SAMPLE SW
IC804 μPC324C AMP
Q822 2SC403C VCO STOP
D816 ISS106 VCO STOP
Q818 2SA1175 H SIZE BUFF
Q819 2SC2785 H. SIZE AMP-1
Q820 2SC2551 H. SIZE AMP-2
Q805, 806 2SC403C EM RECT-1,2
Q801 2SC403C EM BP AMP
Q817 2SC2785 +9V REG
D814 RD10E-N3 +9V REG
D813 RD27E-B4 +24V REG
D815 RD6.2E-B2 -6V REG
IC802 TL710CP A/D CONV
D801 ISI555 EM RECT BIAS
D810 ISI555 LIMIT BIAS
D802-809 ISI555 LIMIT-I-8
Q810 2SC403C LIMIT AMP-2
Q811 2SC403C LIMIT BUFF-3
Q830 2SAII75 WHIT LEVEL-2
Q829 2SC2785 WHIT LEVEL-1
Q833,832 2SC2785 WHIT ABL-3,2
Q831 2SAII75 WHIT ABL-1
Q838 2SC2785
D811 ISS106 THERMO COMP-1
D837 RD6.2E-B2 WHIT IK DET
Q828 2SAII75 VIDEO AMP-1
Q827,826 2SC2785 VIDEO AMP-2,3
D824,825 ISI555 THERMO COMP-2,3
D836 RD6.2E-B2 IK PROTECT DET
Q837 2SAII75 IK PROTECT
D827 ISS97 WHIT ADD
D826 ISS97 VIDEO ADD
D823 ISS97 MARKER ADD
IC805 SN740L04N INV-1
IC806 SN7405N INV-2
IC807,808 SN74LS112N JK-FF-1,2
IC815-817 SN74LS393N H. SIZE V COUNTER-1-3
IC810 SN74LS00N NAND-1
IC811 SN74LS00N NAND-2
IC812 SN74LS09N AND
IC818 SN74LS00N NAND-3
IC819 SN74LS10N NAND-4
IC809 SN74LS175N RING COUNTER
IC813 SN74LS09N R.G.B SW
D817-819 ISI555 R.B.G SW-2
D820-822 ISS97 R.B.G SW-1
D829,832 ISS106 G PEAK DET-1,2
D830,833 ISS106 B PEAK DET-1,2
D831,834 ISS106 R PEAK DET-1,2
Q839 2SC2785
D838 ISI555
IC814 TL081CP PEAK ABL AMP
Q823 2SC2785 R BUFFER
Q825 2SC2785 G BUFFER
Q824 2SC2785 B BUFFER
Q834 2SC2785 PEAK ABL DET
Q835 2SC2785 PEAK ABL BUFF-1
Q836 2SAII75 PEAK ABL BUFF-2
D835 ISI555 STOPPER-1
TO D BOARD (D-2)
TO D BOARD (D-3)

RING COUNTER, R.G.B SW

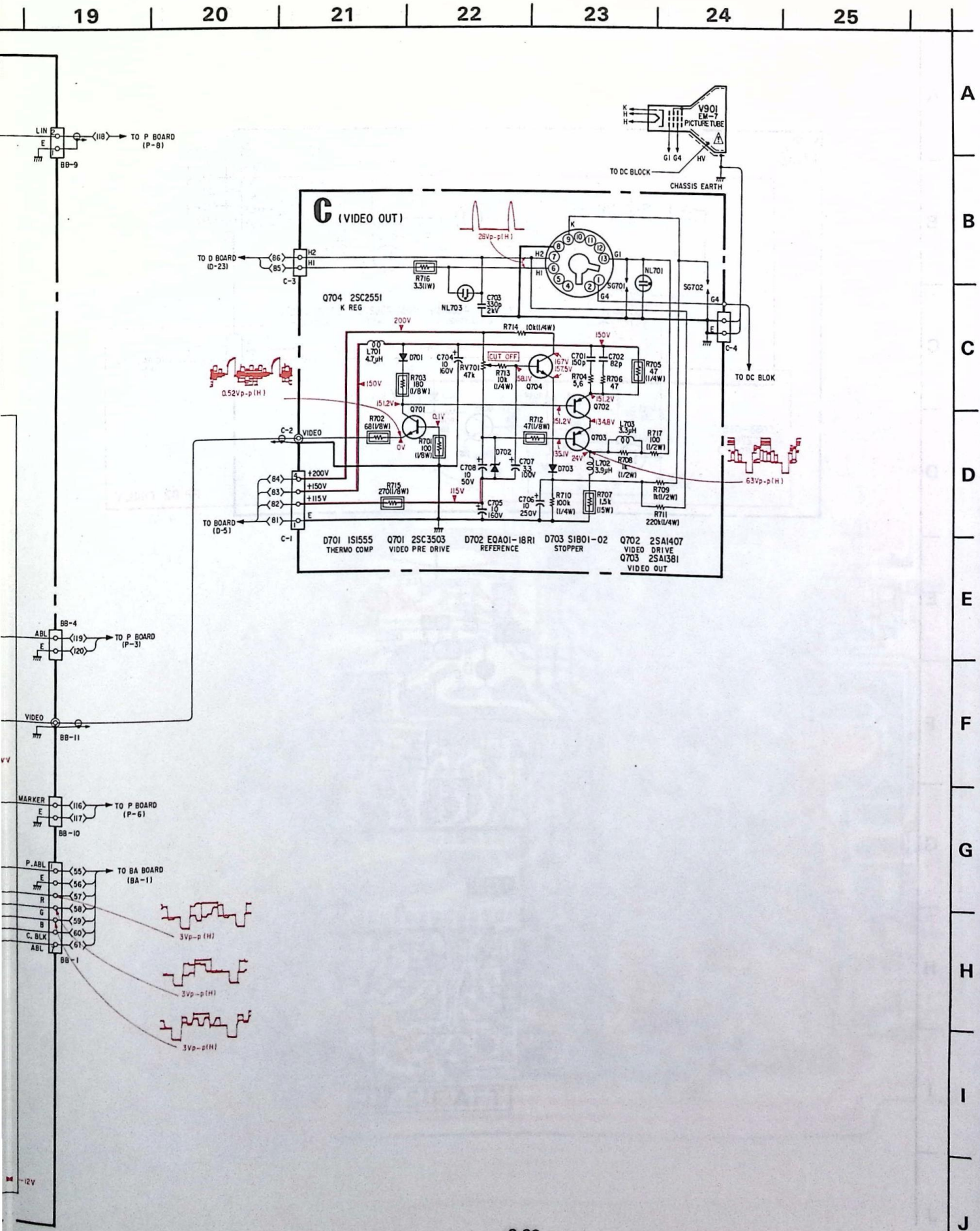

UA, UB, BB (A/D CONV, RING COUNTER, R.G.B SW, VIDEO AMP, PLL, LIMITTER), C (VIDEO OUT) PRINTED WIRING BOARDS

— BB Board —

Q, IC	817 837 836 IC814 835 834 820 823 824 825 826 839 819 IC815 827 828 IC818 IC816 838 IC812 IC819 IC811 IC817 IC813 831 IC810 IC809 832 IC806 818 833 830 829 IC808 IC807 IC805 822 IC804 821 IC801 IC803 IC802 806,805 801 804 807 808,809 810,811 812,813 814,815 802,803	Q, IC
D	814 813 836 835 831 834 837 825,824 830 826,827 823 838 829 822 833,832 819 820,821 818 817 816 812 811 815 801 810 802 804 806 808 803 805 807 809	D
ADJ	RV805 RV808 RV809 RV810 RV806 RV811 RV804 RV803 CV801 RV802 RV801	ADJ

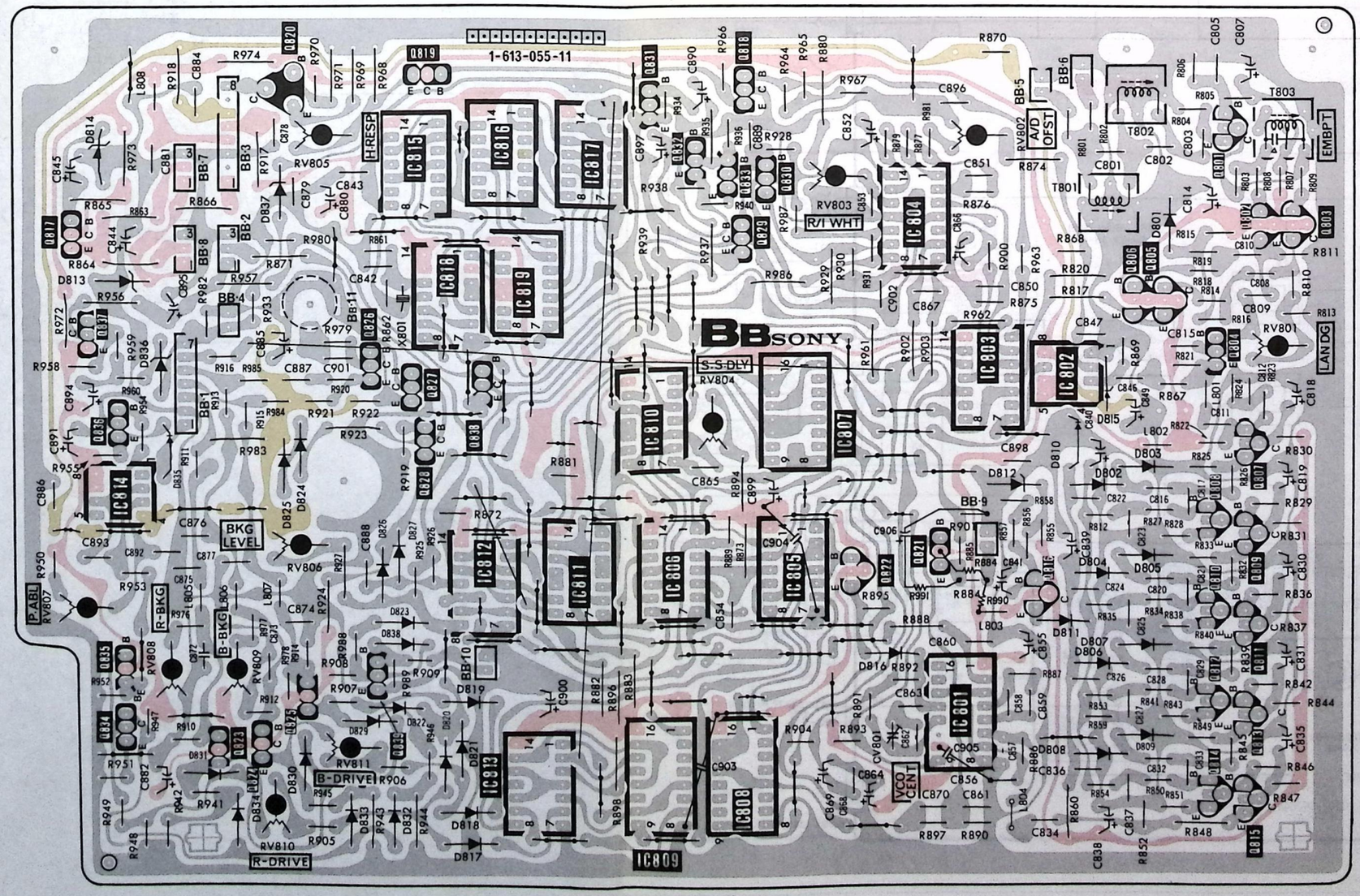

Note:
- : indicates a lead w
- : indicates a lead
- : soldering side
- : B+ pattern
- : B− pattern

16 | 17 | 18 | 19 | 20 | 21 | 22 | 23

— C Board —

Q	703 701 702 704	Q
D	701 702 703	D
ADJ	RV701	ADJ

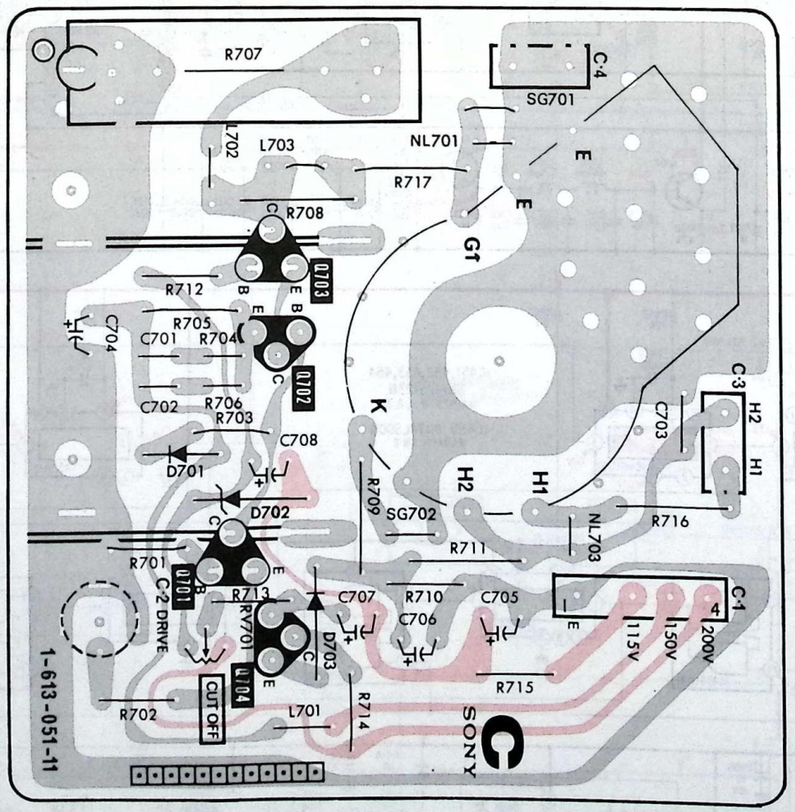

ire mounted on the component side.
Wire mounted on the printed side.

Note: The components identified by shading and mark ⚠ are critical for safety. Replace only with part number specified.

Note:

- All capacitors are in μF unless otherwise noted. pF : μμF 50WV or less are not indicated except for electrolytics.
- All resistors are in ohms, 1/6 W unless otherwise noted. kΩ : 1000Ω, MΩ : 1000kΩ
- : nonflammable resistor.
- All variable and adjustable resistors have characteristic curve B, unless otherwise noted.
- : fusible resistor.
- △ : internal component.
- : panel designation.
- The components identified by ⊠ in this manual have been carefully factory-selected for each set in order to satisfy regulations regarding X-ray radiation. Should replacement be required, replace only with the value originally used.
- When replacing components identified by ◪ , make the necessary adjustments indicated. If results do not meet the specified value, change the component identified by ⊠ and repeat the adjustment until the specified value is achieved.
  (Refer to HV HOLD DOWN, HV REG and BEAM CURRENT HOLD DOWN adjustments on page 4-7—4-11).
- **When replacing the part in below table, be suer to perform the related adjustment.**

Part replaced (◪)	Adjustment (⊠)
HV block	HV REG (R427, R428) HV HOLD DOWN (R527, R528) BEAM CURRENT (R959)
D board complete D503, IC501, R521, R522, R523 . . . in D board	HV HOLD DOWN (R527, R528) BEAM CURRENT (R959)
P board complete R432 . . . in P board	BEAM CURRENT (R959) HV REG (R427, R428)
IC403, IC404, R417, R420, R424, R425, R426, R427, R428, R429 . . . in P board	HV REG (R427, R428)
D505, Q503, R524, R525, R526, R527, R528 . . . in D board	HV HOLD DOWN (R527,528)
D504, D516, Q513, R564, R565, R566, R582 . . . in D board R433, R434, R435, R437 . . . in P board D836, D837, Q837, R933, R956, R957, R958, R959, R960, R972, R974, R980, R982 . . in BB board BB board complete	BEAM CURRENT HOLD DOWN (R959)

- Voltages are dc with respect to ground unless otherwise noted.
- Readings are taken with a 10MΩ digital multimeter.
- : adjustment for repair.
- Readings are taken with a color-bar signal input.
- Voltage variations may be noted due to normal production tolerances.
- ——— : B+ bus.
- – – – : B- bus.
- Do not touch marked ◆ on D board with probe of digital multimeter it reset in off position the set.
- Waveforms marked ☛ are taken with 1:100 oscilloscope probe used.

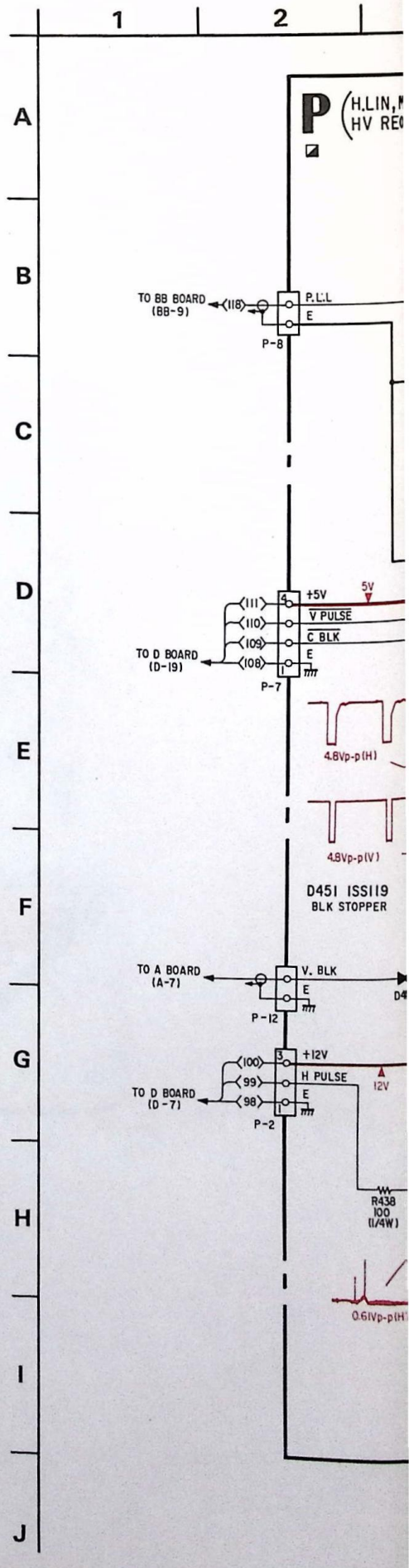

P (H. LIN MARKER, HV REG, SUB DY OUT), T (DF AMP, INVERTER, PRE DRIVE) SCHEMATIC DIAGRAM

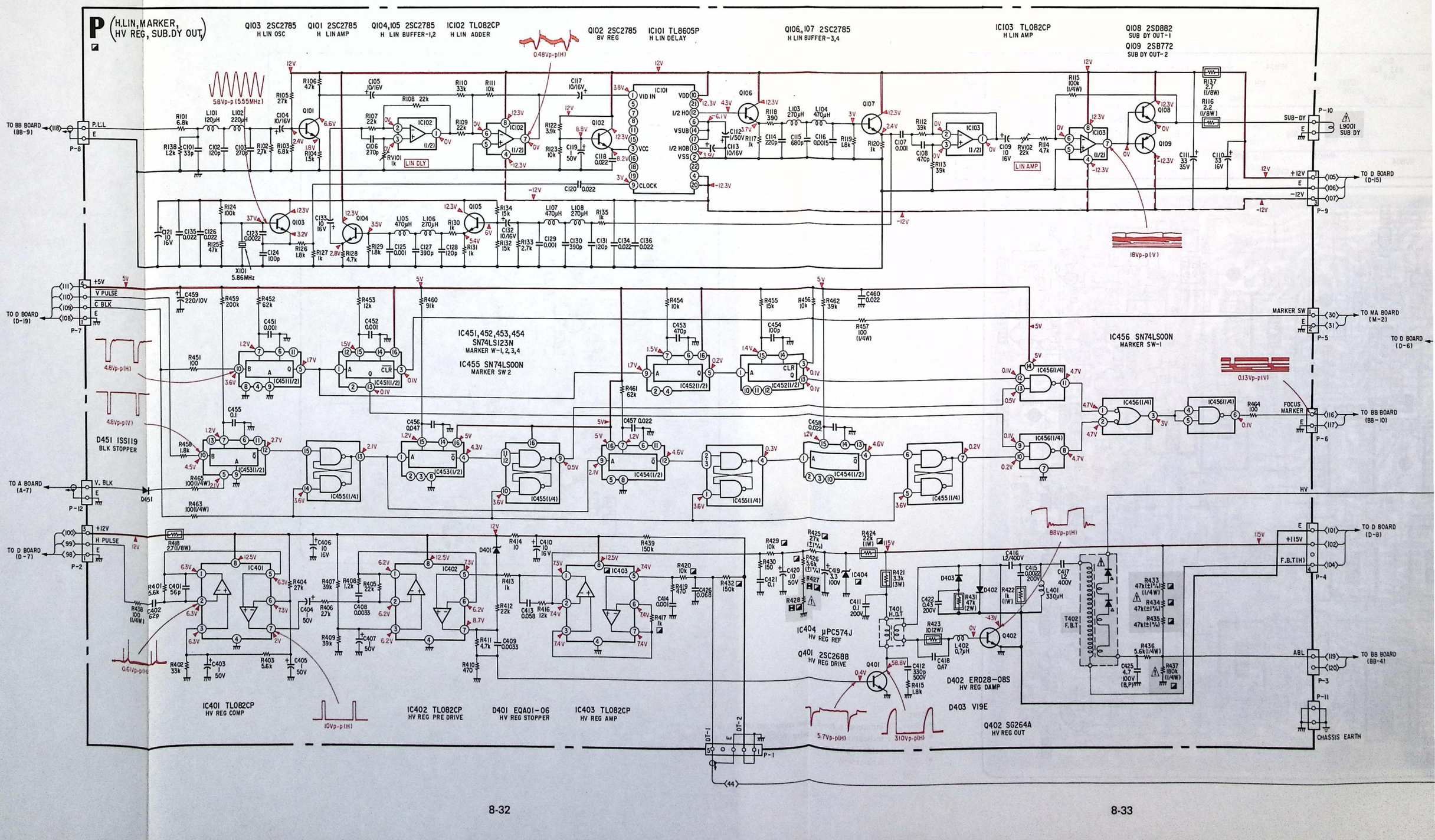

MARKER, HV REG, SUB DY OUT

11 12 13 14 15 16 17 18 19 20 21 22 23 24 25

A B C D E F G H I J

V7 2SC2785
BUFFER-3,4

IC103 TL082CP
H LIN AMP

Q108 2SD882
SUB DY OUT-1

Q109 2SB772
SUB DY OUT-2

L104 470μH
C116 0.0015
R119 1.8k
Q107
R120 1k
C107 0.001
C108 470p
R112 39k
R113 39k
IC103 (1/2)
C109 10 16V
LIN AMP
RV102 22k
R114 4.7k
R115 100k (1/4W)
IC103 (1/2)
R116 2.2 (1/8W)
R117 2.7 (1/8W)
Q108
Q109
C111 33 35V
C110 33 16V
SUB-DY
P-10
L9001 SUB DY
+12V
-12V
P-9
TO D BOARD (D-15)
18Vp-p(V)

R462 39k
C460 0.022
R457 100 (1/4W)
MARKER SW
P-5
TO MA BOARD (M-2)

IC456 SN74LS00N
MARKER SW-1

IC456(1/4)
IC454(1/2)
IC455(1/4)
0.13Vp-p(V)
R464 100
FOCUS MARKER
P-6
TO BB BOARD (BB-10)

HV
P-4
E
+115V
F.B.T(H)
TO D BOARD (D-8)
ABL
P-3
TO BB BOARD (BB-4)
P-11
CHASSIS EARTH
8Vp-p(H)

R424 22k (1W)
C419 3.3 100V
IC404 μPC574J
HV REG REF
C411 0.1 200V
R421 3.3k (3W)
T401 H.D.T
Q401 2SC2688
HV REG DRIVE
C412 330p 500V
R415 1.8k
D403
D402
R431 47k (2W)
R422 1k (1W)
C422 0.43 200V
C415 0.0022 200V
C417 12 400V
C416 12/400V
L401 330μH
R423 10 (2W)
L402 0.7μH
C418 0.47
Q402
T402 F.B.T
R433 47k(±1%) (1/4W)
R434 47k(±1%)
R435 47k(±1%)
R436 5.6k (1/4W)
C425 4.7 100V (B,P)
R437 180k (1/4W)
D402 ERD28-08S
HV REG DAMP
D403 V19E
Q402 SG264A
HV REG OUT
5.7Vp-p(H)
310Vp-p(H)

TO MA BOARD (M-3)
T-2
T-3
M9001 FOCUS
S9002
S9003
FS SW2
+15V
F SW1
MOT SW1
MOT 1
MOT 2
MOT SW2

T (DF AMP, INVERTER, PRE DRIVE)

Q052 2SC2785
PRE DRIVE-1
Q053 2SD882
DRIVE-1
Q051 2SC2785
INVERTER 1
Q054 2SC2785
PRE DRIVE-2
Q055 2SD882
DRIVE-2
D051~054
SIB01-02
CLIPPER-1-4
( ) : Focus sw(+)
( ) : Focus sw(-)
Q056 2SC2785
INVERTER-2
Q057,059 2SC2785
PRE DRIVE-3,4
Q058,060 2SD882
DRIVE-3,4

T-1
D055 RD9.1E-B2
+9V REG
+15V
V PARA
V SAW
DF PULSE
TO D BOARD (D-6)
DFV PHASE
DFV AMP
RV052 220
RV051 22k
C052 47 25V
C053 47 25V
R064 4.7k
C054 22 25V
R060 1k
C051 100 16V
R061 5.6k (1/4W)
R065 22k
R066 47 (1/4W)
R063 1k
IC051
Q061
R071 10k
T051 D.F.T
D057
D057 V30N DF RECT
C058 330p 2kV
R070 120k
C057 0.0022 200V
C055 3.3 160V
C056 0.001/100V
Q062
Q063
D056
D056 SIB01-02 DF AMP
R067 56k (1/4W)
R068 180k (1/4W)
R069 10k
L051 2.7mH
T052 D.F.T
C059 180p 2kV
C060 33p 3kV
DYNAMIC FOCUS
T-4
37
550Vp-p(H)
1.55Vp-p(V)
10Vp-p(H)
IC501 TL081CP DF AMP
Q061 2SD774 DF OUT
Q062 2SC2785 DF INVERTER
Q063 2SD774 DF CONV

TO CRT
DC BLOCK
FOCUS
TO CRT G4
R9002 2.2M
R9003 2.2M
44
45
TO D BOARD (D-10)

P (H. LIN MARKER, HV REG, SUB DY OUT), T (DF AMP, INVERTER, PRE DRIVE) PRINTED WIRING BOARDS

— P Board —

Q, IC	402 401 IC455 IC453 IC402 IC404 IC454 IC451 IC452 IC456 IC401 IC403 101 IC102 102 IC103 103 104 IC101 105 107 108 109 106	Q, IC
D	402 403 401 451	D
ADJ	RV102 RV101	ADJ

— T Board —

Q, IC	058 057 056	
D	054 052	
ADJ		

1-613-054-11

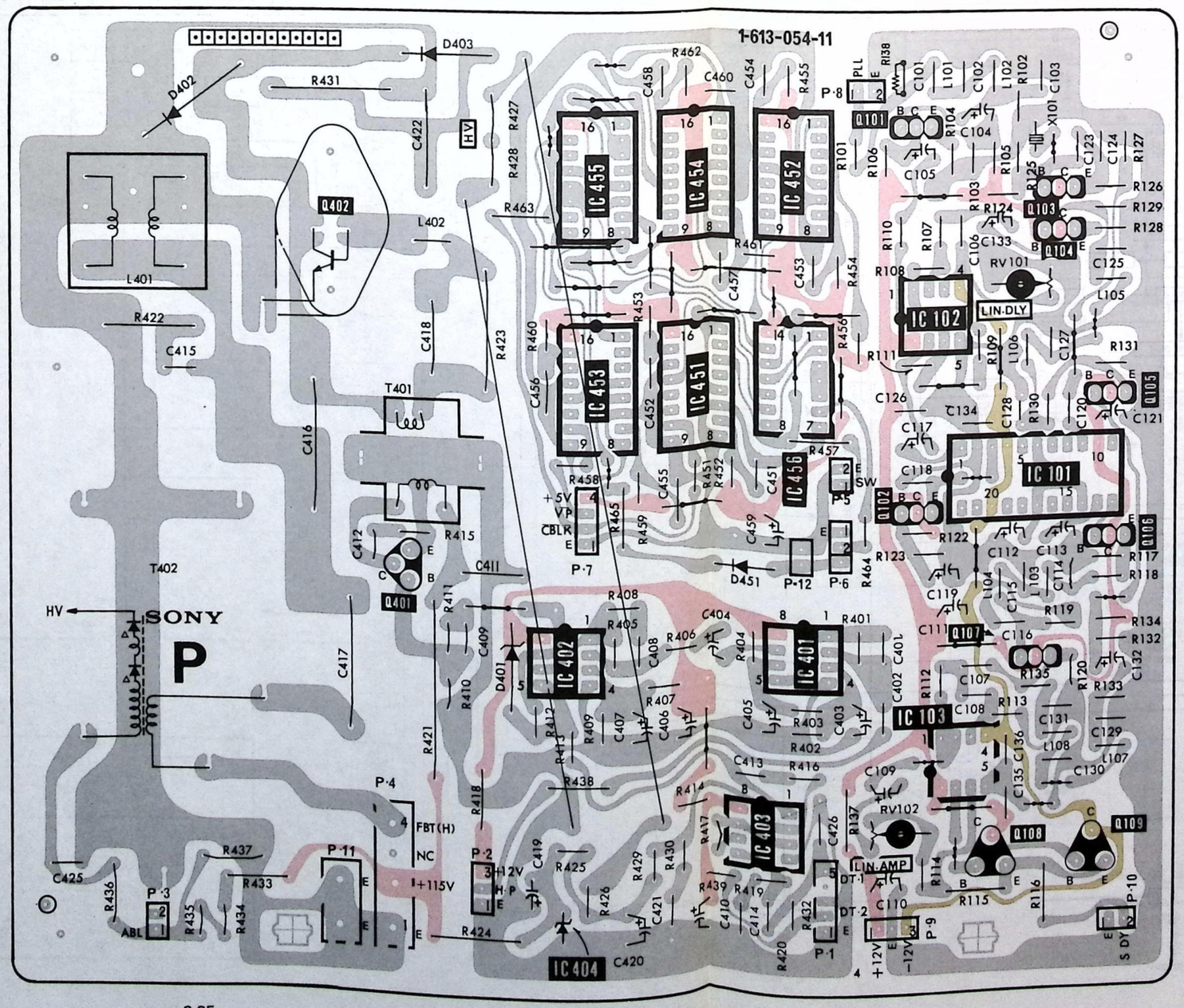

Note:

- : indicates a lead wire mounted on the component side.
- : indicates a lead wire mounted on the printed side.
- : soldering side
- : B+ pattern
- : B− pattern

MARKER, HV REG, SUB DY OUT

12 | 13 | 14 | 15 | 16 | 17 | 18 | 19 | 20 | 21 | 22

A B C D E F G H I J

– T Board –

Q,IC	058 057 056	060 059	055 054 051	053 052	IC051 061	062 063	Q,IC
D	054 052		053 051		057 056 055		D
ADJ					RV051	RV052	ADJ

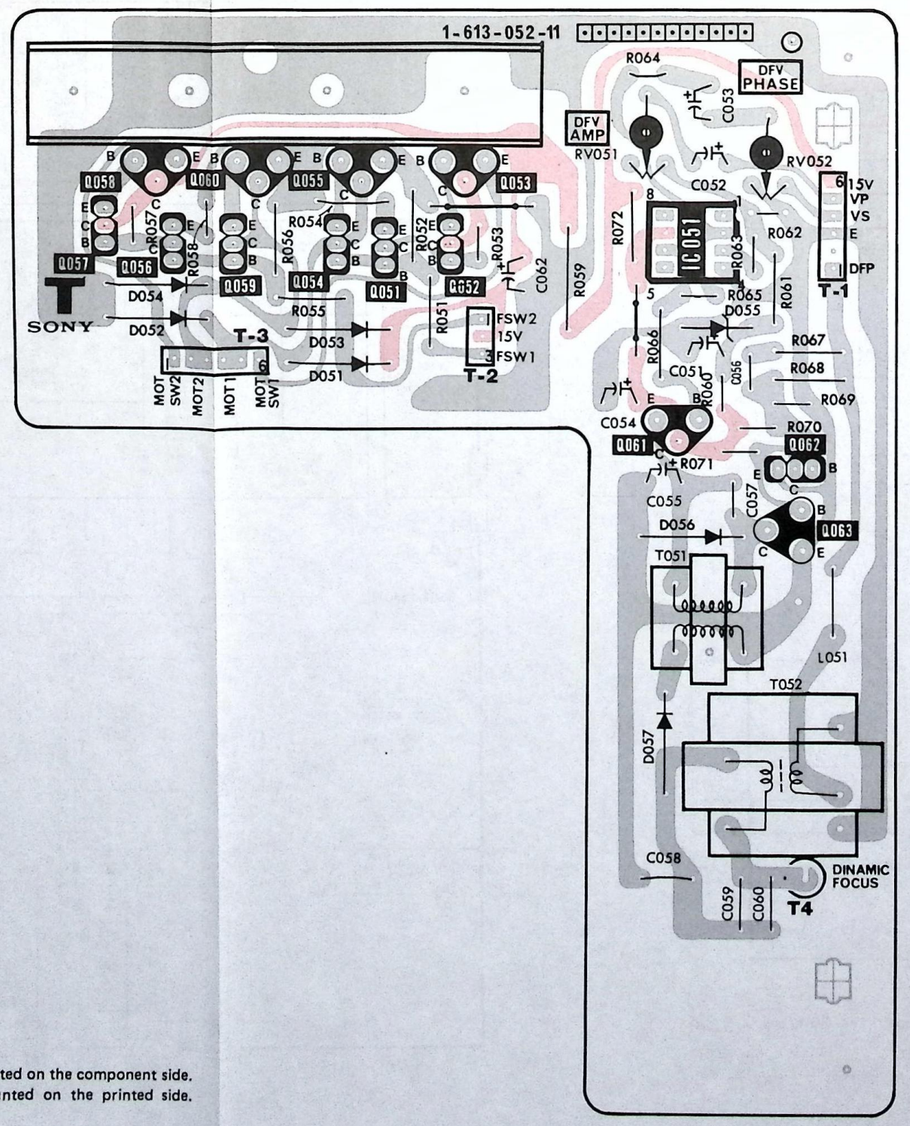

Note:

- ● o— : indicates a lead wire mounted on the component side.
- ● ●— : indicates a lead wire mounted on the printed side.
- ● : soldering side
- ● : B+ pattern
- ● : B– pattern

D (SYNC SEP, H. V OSC, POWER SUPPLY, REG OUT), GA, GB, V (V OUT) SCHEMATIC DIAGRAM

Note: The components identified by shading and mark ⚠ are critical for safety. Replace only with part number specified.

Note:

- All capacitors are in μF unless otherwise noted. pF : μμF 50WV or less are not indicated except for electrolytics.
- All resistors are in ohms, 1/6 W unless otherwise noted. kΩ : 1000Ω, MΩ : 1000kΩ
- : nonflammable resistor.
- All variable and adjustable resistors have characteristic curve B, unless otherwise noted.
- : fusible resistor.
- △ : internal component.
- : panel designation.
- The components identified by ⊠ in this manual have been carefully factory-selected for each set in order to satisfy regulations regarding X-ray radiation. Should replacement be required, replace only with the value originally used.
- When replacing components identified by ◪ , make the necessary adjustments indicated. If results do not meet the specified value, change the component identified by ⊠ and repeat the adjustment until the specified value is achieved.
  (Refer to HV HOLD DOWN, HV REG and BEAM CURRENT HOLD DOWN adjustments on page 4-7—4-11).
- **When replacing the part in below table, be suer to perform the related adjustment.**

Part replaced (◪)	Adjustment (⊠)
HV block	HV REG (R427, R428) HV HOLD DOWN (R527, R528) BEAM CURRENT (R959)
D board complete D503, IC501, R521, R522, R523 . . . in D board	HV HOLD DOWN (R527, R528) BEAM CURRENT (R959)
P board complete R432 . . . in P board	BEAM CURRENT (R959) HV REG (R427, R428)
IC403, IC404, R417, R420, R424, R425, R426, R427, R428, R429 . . . in P board	HV REG (R427, R428)
D505, Q503, R524, R525, R526, R527, R528 . . . in D board	HV HOLD DOWN (R527,528)
D504, D516, Q513, R564, R565, R566, R582 . . . in D board R433, R434, R435, R437 . . . in P board D836, D837, Q837, R933, R956, R957, R958, R959, R960, R972, R974, R980, R982 . . in BB board BB board complete	BEAM CURRENT HOLD DOWN (R959)

- Voltages are dc with respect to ground unless otherwise noted.
- Readings are taken with a 10MΩ digital multimeter.
- : adjustment for repair.
- Readings are taken with a color-bar signal input.
- Voltage variations may be noted due to normal production tolerances.
- ——— : B+ bus.
- – – – : B- bus.
- Do not touch marked ◆ on D board with probe of digital multimeter it reset in off position the set.
- Waveforms marked ☛ are taken with 1:100 oscilloscope probe used.

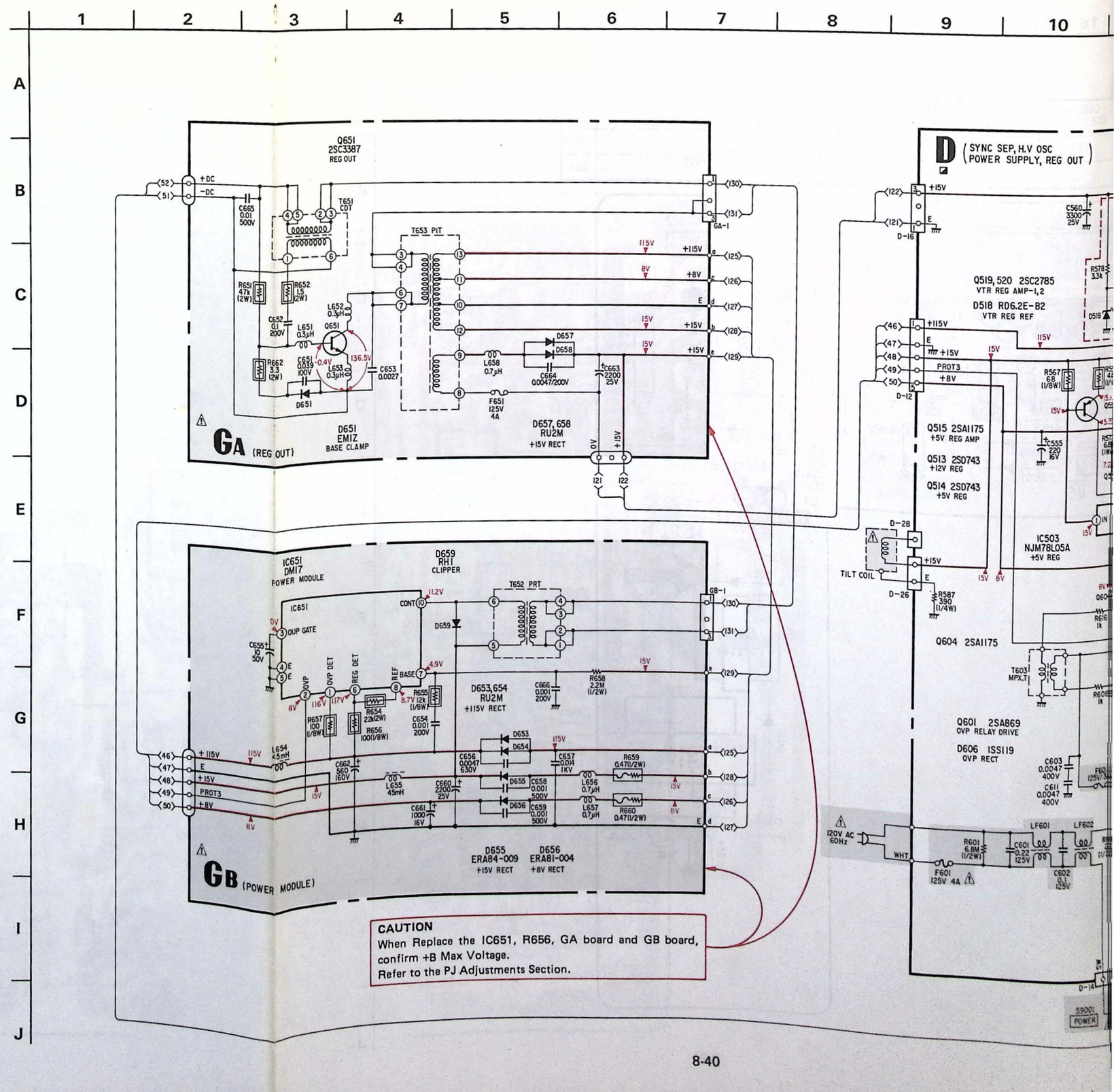

SYNC SEP, H.V OSC, V OUT

SYNC SEP, H.V OSC, V OUT

9 10 11 12 13 14 15 16 17 18 19 20 21 22 23 24 25

A B C D E F G H I J

D (SYNC SEP, H.V OSC / POWER SUPPLY, REG OUT)

FP-60 ONLY TO VTR

TO BA BOARD (BA-4) TO A BOARD (A-1) TO P BOARD (P-7) TO BB BOARD (BB-2) TO P BOARD (P-2) TO T BOARD (T-1) TO P BOARD (P-4) TO C BOARD (C-1)

Q517 2SB856 VTR REG
Q518 2SA1175 VTR REG DRIVE
Q519, 520 2SC2785 VTR REG AMP-1,2
D518 RD6.2E-B2 VTR REG REF
Q515 2SA1175 +5V REG AMP
Q513 2SD743 +12V REG
Q514 2SD743 +5V REG
D516 RD13E-B2 +12V REG REF
IC503 NJM78L05A +5V REG
Q602,603 2SC2785 OVP OSC-1,2
Q604 2SA1175
Q601 2SA869 OVP RELAY DRIVE
D606 ISS119 OVP RECT
D601-604 U05E +160V RECT-1-4
IC501 CX20013A H.V OSC, SYNC SEP
D520 RD9.1E-B3 +9V REG
D521 1S1555
D503 RD5.6E-B2 PROTECT REF
Q505 2SC2688 H OUT DRIVE
Q506 2SD1397 H OUT
Q503 2SC2785 HV DET
D501,502 ISS119 CLAMP-1,2
Q501 2SC2785 BLK INV
Q502 2SC2785 V PULSE INV
Q504 2SC2785 H PIN AMP
Q511 2SC2688 CONV DRIVE
Q512 2SD1398 CONV OUT
D519 V30N -38V RECT
D512 V30N +200V RECT
D513 V19E +150V RECT
D514 V19E -12V RECT
D517 RD13E-B2 -12V REG REF
D515 V19E +24V RECT
D509,510 V19C H CENT-1,2
D508 ERC26-15S H OUT DAMP
D504,505 ISS119 PROT MIX-1,2
Q516 2SB772 -12V REG
Q507 2SD774 H CENT-1
Q508 2SB734 H CENT-2
D507 S1B01-02 H.PULSE CLAMP
Q509 2SC2534 H.PIN OUT
Q510 2SC2551 H. PIN DRIVE
IC041 μPC1378H-L V OUT
D041 S1B01-02 V BOOST
DY. ASS'Y
CHASSIS EARTH
TO DC BLOK
TO P BOARD (P-9)
TO BB BOARD (BB-3)
TO C BOARD (C-3)

8-41 8-42

SYNC SEP, H.V OSC, V OUT SYNC SEP, H.V OSC, V OUT

D (SYNC SEP, H. V OSC, POWER SUPPLY, REG OUT), GA, GB, V (V OUT) PRINTED WIRING BOARDS

— D Board —

Q, IC	501 502 IC501 504 503 510 509 512 506 505 511 516 515, IC503 508 507 514 513 517 518 519 520 602 601 603 604	Q, IC
D	501 502 520 504 505 503 521 507 508 512 513 510 509 515 519 514 517 516 518 604 603 601 602 606	D
ADJ	RV501 RV502 RV504 RV503 RV505	ADJ

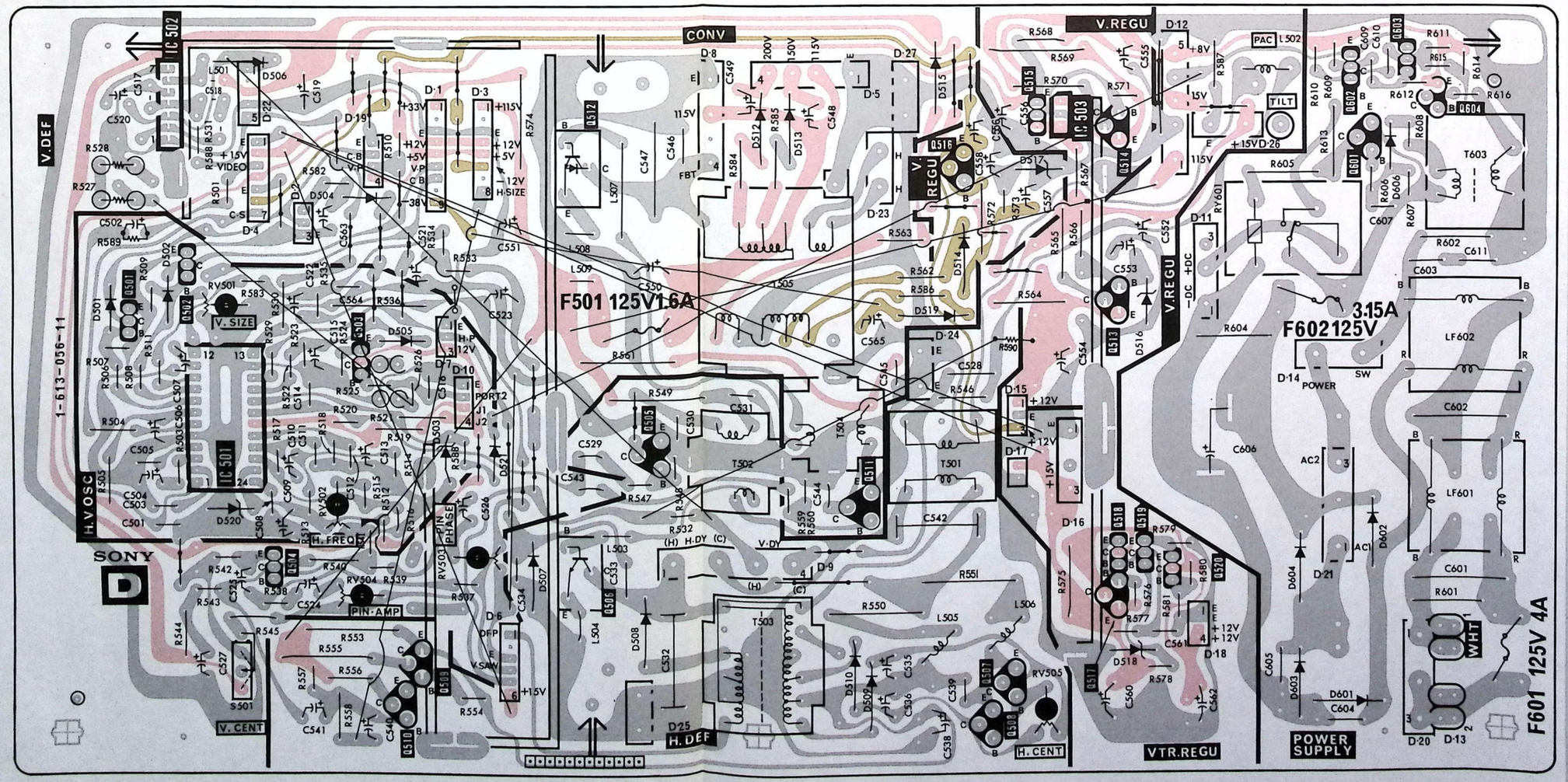

— GB Board —

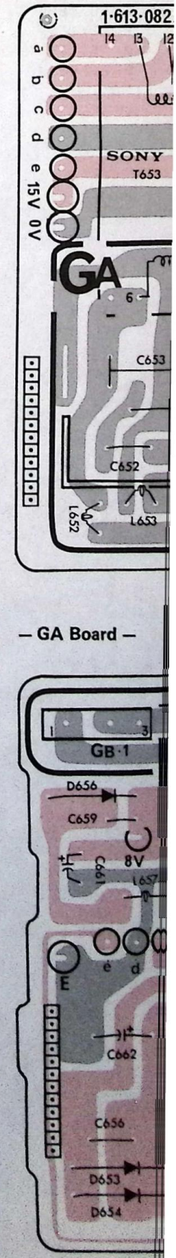

— GA Board —

Note:

- ● —○— : indicates a lead wire mounted on the component side.
- ● —●— : indicates a lead wire mounted on the printed side.
- ● : soldering side
- ● : B+ pattern
- ● : B− pattern

16 | 17 | 18 | 19 | 20 | 21 | 22 | 23

A B C D E F G H I J

, IC
D
ADJ

— GB Board —

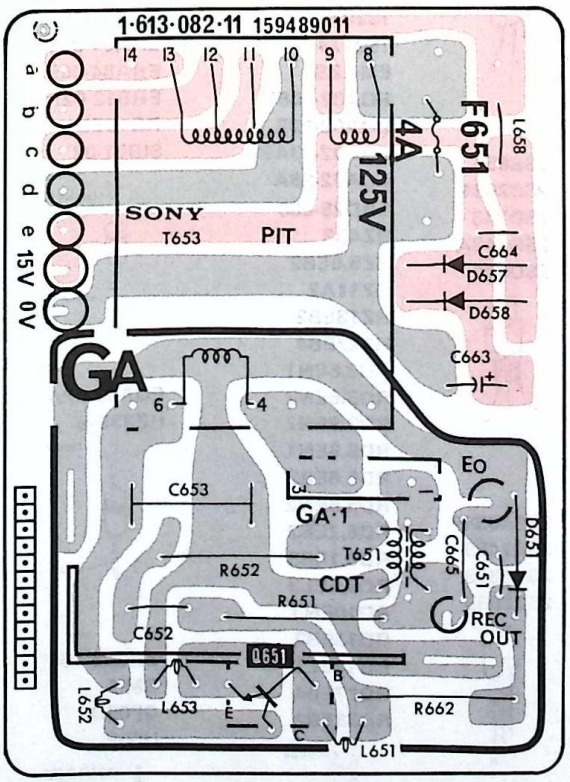

— V Board —

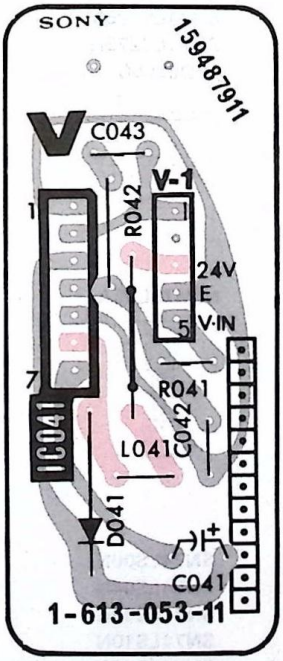

— GA Board —

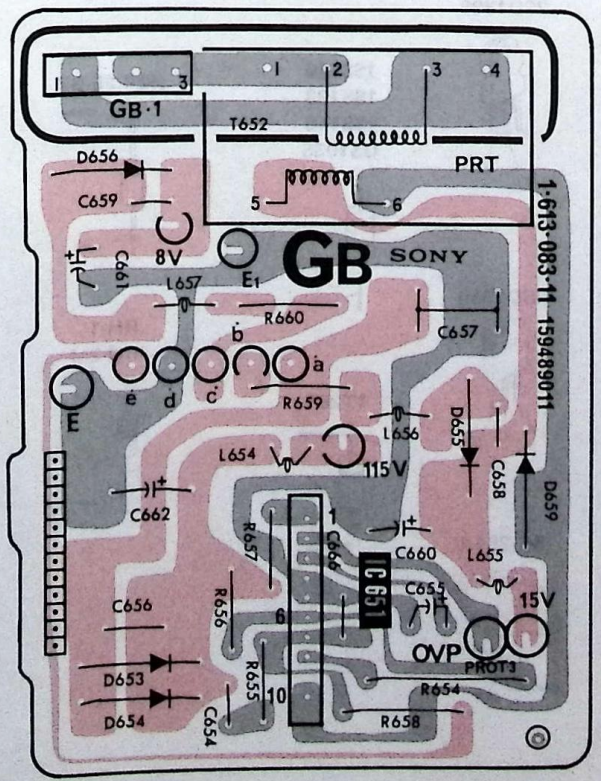

8-5. SEMICONDUCTORS

CX520-108N
CX520-111N
CX848

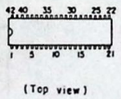

CX894
LA7910



CX7958
TL8605P

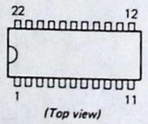

CX20013A



CX20014A

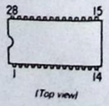

CX23041

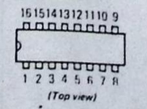

DM-17

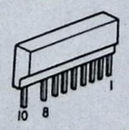

NE564N
SN74LS112AN
SN74LS123N
SN74LS175N
SN74LS279N
μPD6250C

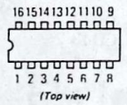

NJM78L05A



SN74LS00N
SN74LS04N
SN74LS09N
SN74LS10N
SN74LS393N
SN74405N
TC4066BP
μPC324C

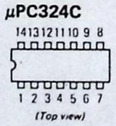

TL081CP
TL082CP
TL710CP
μPC4558C



μPC574J

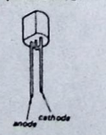

μPC1378H-L

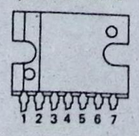

2SA733
2SC945
2SC1364
2SC1740S
2SC2551



2SA896
2SC1475
2SD789



2SA1048
2SA1115
2SC403C

2SA1175
2SC2785



2SA1381
2SC3503



2SA1407
2SB772
2SC2688
2SD882

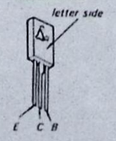

2SB734
2SD774



2SB856
2SC2534
2SD743
2SD743A
2SD880



2SC403SP
2SC2458
2SC2603
2SC2839



2SC3387
2SD1397
2SD1398



2SD1310



SG-264A

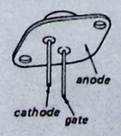

1N4148H
1SS106
1S1555
1S2076
1S2473
EM-1ZS
EQA02-10B5
EQA02-12B
EQA02-13AB5
EQA02-28A
ERD28-08S
HZ4B3
HZ5.6EB2
HZ11A2
HZ13EB2
HZ27EB4
RD3.6EN1
RD3.6EN2
RD3.9EN2
RD5.6EN1
RD5.6EB2
RD5.6EN2
RD6.2EB2
RD9.1EB3
RD9.1EL3
RD10EN3
RD13EB2
RD13EL2
RD27EB4
RD33EB2



1SS119
1SS133
1SS148
US1035

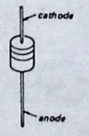

1T261



10E-2
EM-1Z
EQA01-06S2
EQA01-18R1
ERA81-004
ERA84-009
ERB12-02RK
RD13EB2
SIB01-02



EQA02-32A
HZ33E-B



ERC26-15S
GM-3
GP08D
U05E

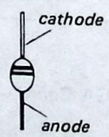

HZ6.2E-B2

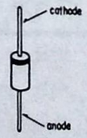

RH-1
RU-2M

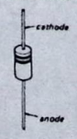

SEL2310G
TLG124A

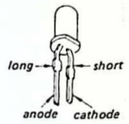

V06C
V19C
V19E
V30N

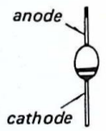

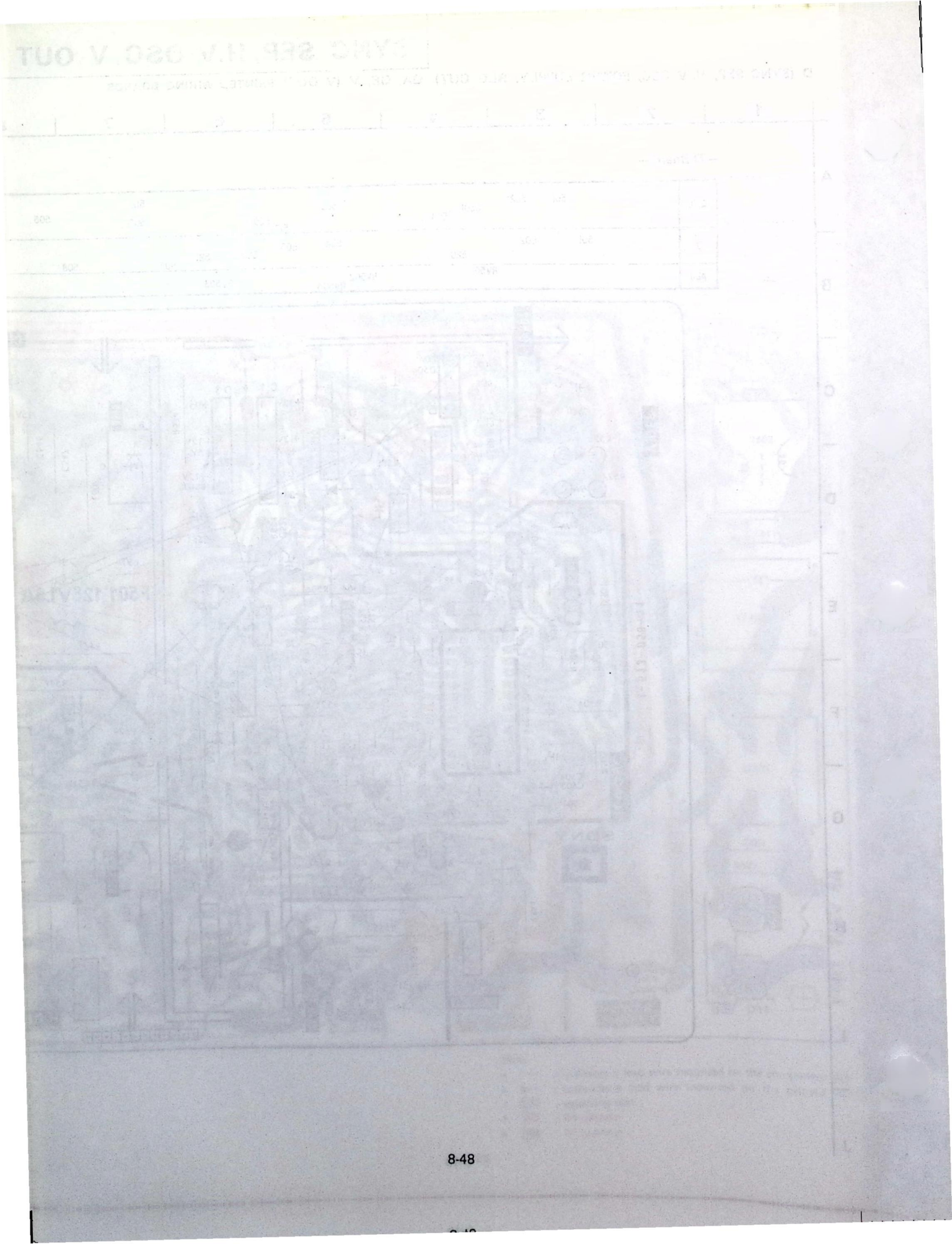

SECTION 9
DIAGRAMS
(Video : FP-60)

TABLE OF CONTENTS

Title	*Page*
9-1. CIRCUIT BOARDS LOCATION	9-1
9-2. BLOCK DIAGRAMS	
Video Circuit	9-5
Rec Sytem	9-9
PB System Video	9-11
Servo Circuit	9-13
Reel Servo	9-17
System Control Section	9-21
Audio System	9-25
9-3. INTERFACE	
System Control–Servo Block	9-27
System Control–Audio Block	9-27
System Control–Reel Block	9-29
System Control–Video Block	9-29
System Control–Power Block	9-31
System Control–Tuner, Timer Block	9-31
System Control–Mechanism Block	9-33
9-4. TIMING CHART	
Capstan Phase (REC)	9-34
Capstan Phase (PB)	9-35
Capstan Speed System	9-35
Drum Phase System	9-36
Instrumentation Counter	9-36
Drum Speed	9-37
Instrumentation Period Produce	9-37
FG Circuit	9-38
PG–A, B, S	9-39

TABLE OF CONTENTS

Title	Page
PG (REC/PB)	9-39
Basic Servo Circuit	9-40
SP-1 CTL Circuit	9-41
CTL-RF SWP	9-41
Pause ON/OFF	9-42
9-5. AUDIO LEVEL DIAGRAM	9-43
9-6. SEMICONDUCTORS	9-45
9-7. WAVEFORM	9-47
9-8. SCHEMATIC DIAGRAMS AND PRINTED WIRING BOARDS	
MA-6, LU-1 BOARD CONNECTION	9-67
MA-6, LU-1 PRINTED WIRING BOARD	9-70
MA-6 SCHEMATIC DIAGRAM	9-73
MC-1 PRINTED WIRING BOARD	9-78
MC-1 SCHEMATIC DIAGRAM	9-83
FD-3, TS-43 PRINTED WIRING BOARD	9-86
FD-3, TS-43 SCHEMATIC DIAGRAM	9-89
YM-1 PRINTED WIRING BOARD	9-94
YM-1 SCHEMATIC DIAGRAM	9-97
OM-1 PRINTED WIRING BOARD	9-100
OM-1 SCHEMATIC DIAGRAM	9-100
JG-1 PRINTED WIRING BOARD	9-101
JG-1 SCHEMATIC DIAGRAM	9-103
VB-1 PRINTED WIRING BOARD	9-105
VB-1 SCHEMATIC DIAGRAM	9-107
YS-1 PRINTED WIRING BOARD	9-108
YS-1 SCHEMATIC DIAGRAM	9-109
PE-3 PRINTED WIRING BOARD	9-111
PE-3 SCHEMATIC DIAGRAM	9-113
YF-1 PRINTED WIRING BOARD	9-115
YF-1 SCHEMATIC DIAGRAM	9-117
RP-11 PRINTED WIRING BOARD	9-119
RP-11 SCHEMATIC DIAGRAM	9-121
DE-2 PRINTED WIRING BOARD	9-123
DE-2 SCHEMATIC DIAGRAM	9-125
CM-4 PRINTED WIRING BOARD	9-127
CM-4 SCHEMATIC DIAGRAM	9-129
AD-9 PRINTED WIRING BOARD	9-131
AD-9 SCHEMATIC DIAGRAM	9-133
SV-11 PRINTED WIRING BOARD	9-135
SV-11 SCHEMATIC DIAGRAM	9-137
SP-1 PRINTED WIRING BOARD	9-141
SP-1 SCHEMATIC DIAGRAM	9-143
SD-1 PRINTED WIRING BOARD	9-145
SD-1 SCHEMATIC DIAGRAM	9-147
RM-9 PRINTED WIRING BOARD	9-149
RM-9 SCHEMATIC DIAGRAM	9-151
CAPSTAN MOTOR WIRING BOARD	9-153
CAPSTAN MOTOR SCHEMATIC DIAGRAM	9-155
REEL MOTOR WIRING BOARD	9-157
REEL MOTOR SCHEMATIC DIAGRAM	9-159
RS-1 PRINTED WIRING BOARD	9-161
RS-1 SCHEMATIC DIAGRAM	9-163
MB-5 PRINTED WIRING BOARD	9-166
MB-5 SCHEMATIC DIAGRAM	9-169
PC-5, LM-11 PRINTED WIRING BOARD	9-171
PC-5, LM-11 SCHEMATIC DIAGRAM	9-173
SUPPLY SENSOR PRINTED WIRING BOARD	9-175
SUPPLY SENSOR SCHEMATIC DIAGRAM	9-175
TAKE UP SENSOR PRINTED WIRING BOARD	9-176
TAKE UP SENSOR SCHEMATIC DIAGRAM	9-176

9-1. CIRCUIT BOARDS LOCATION

MA-6 Board

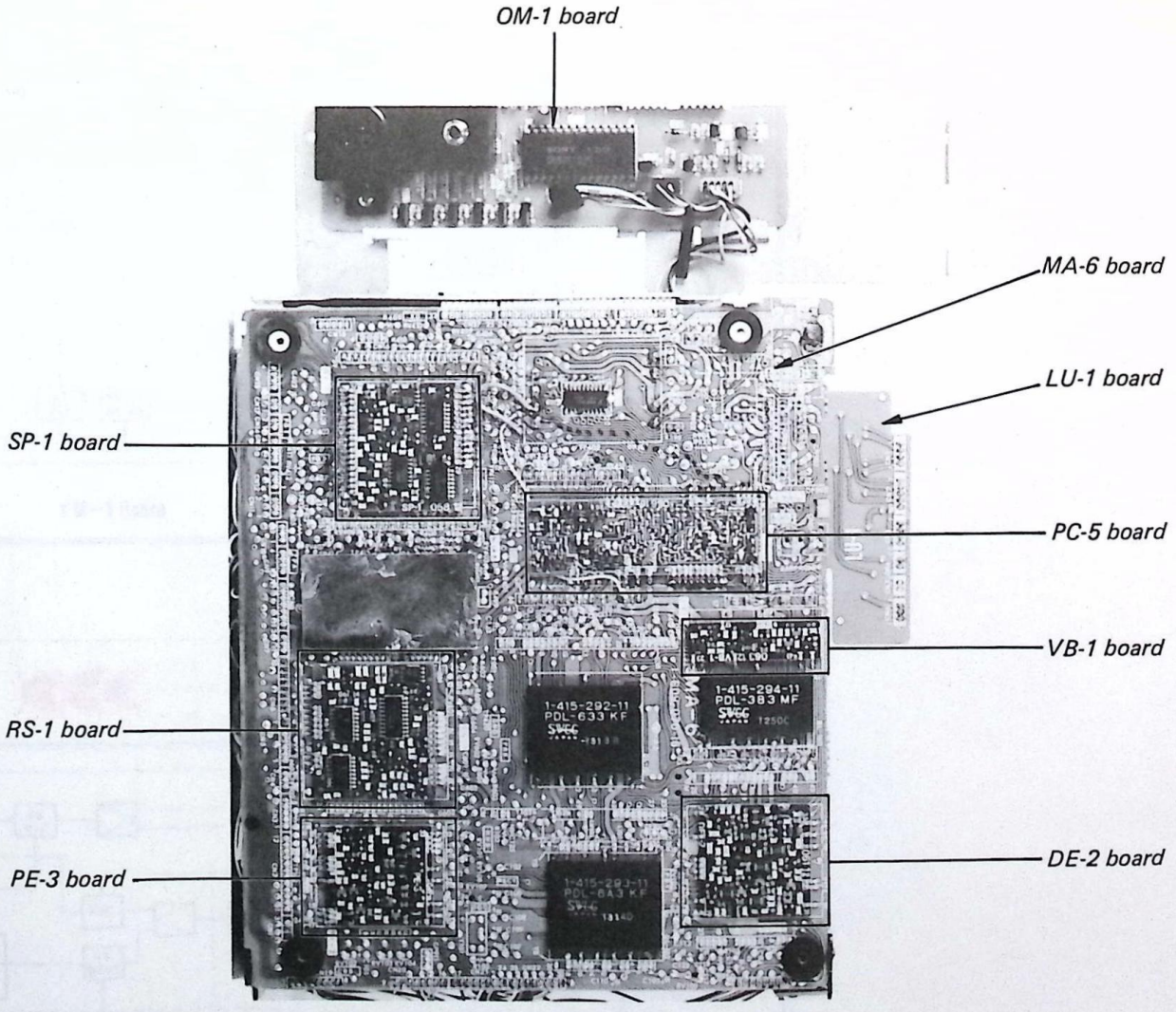

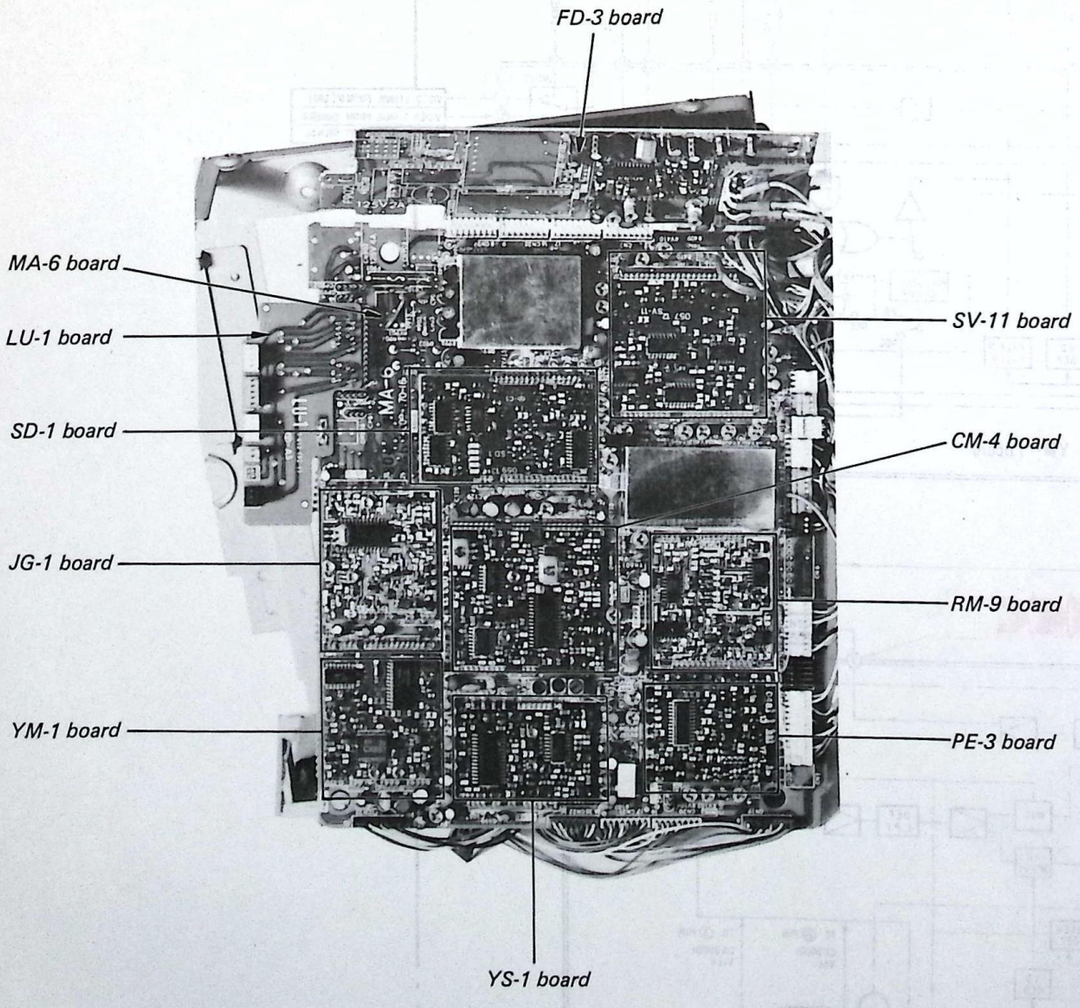

CIRCUIT BOARDS LOCATION

MC-1 board

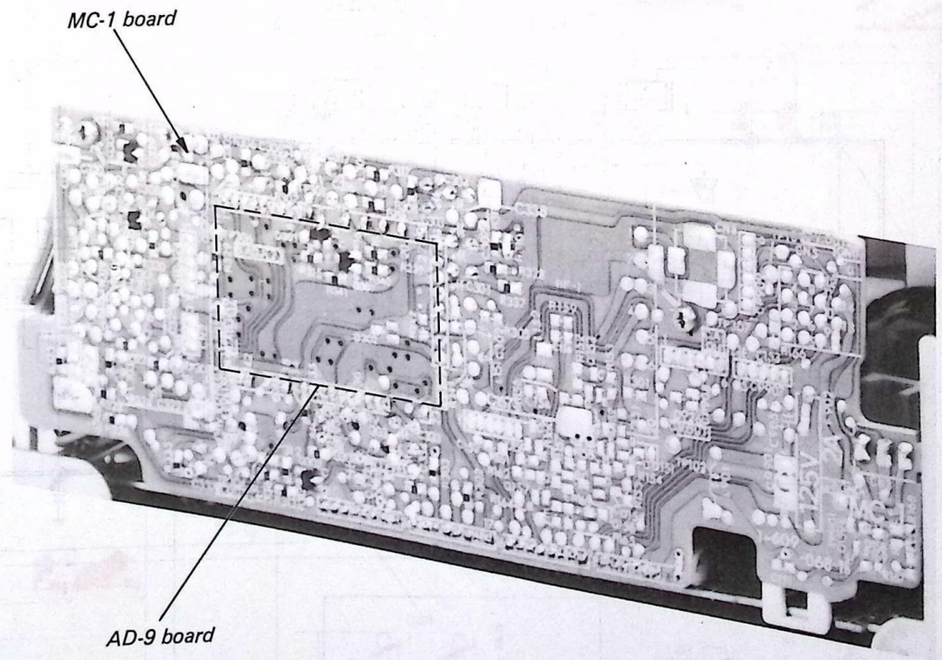

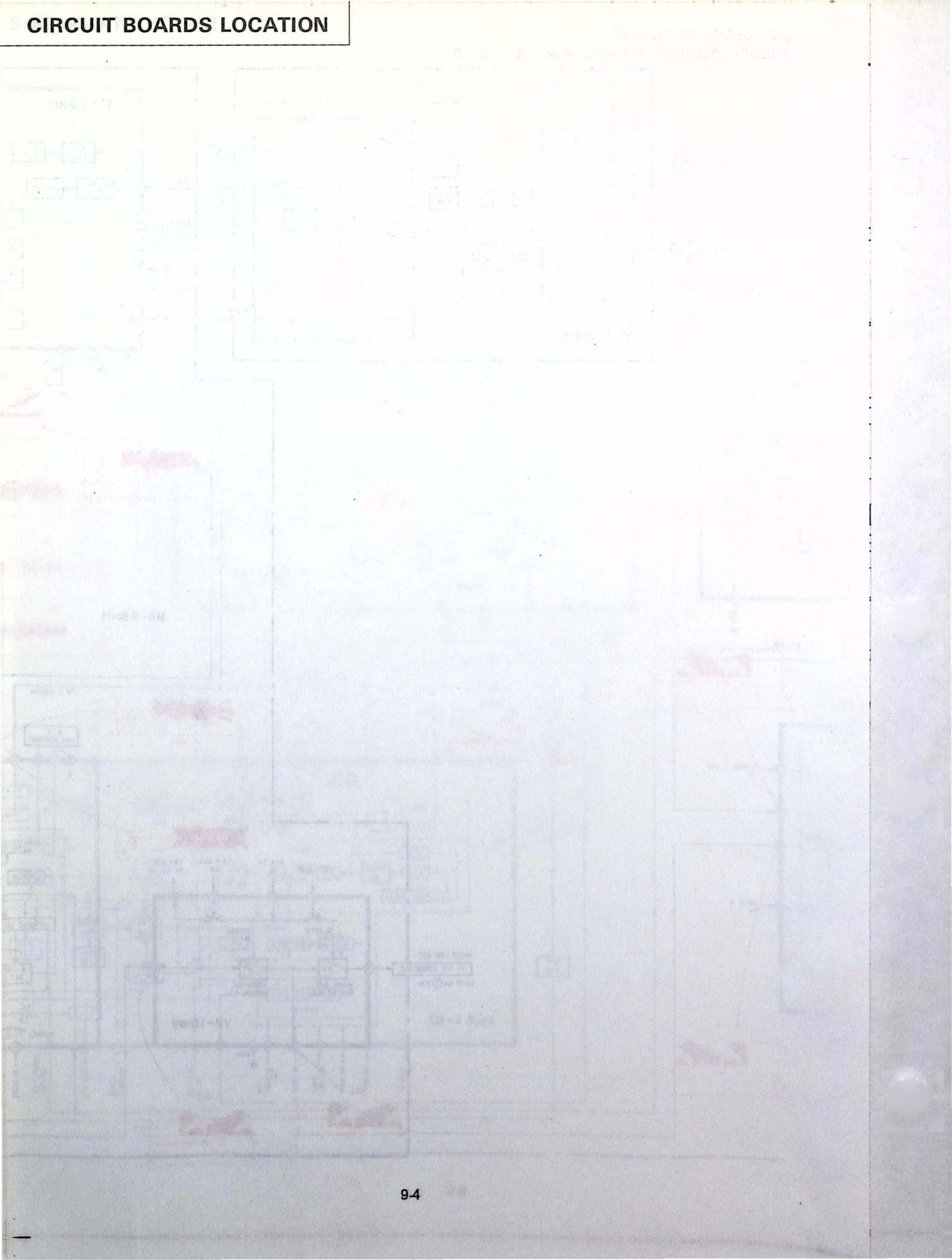

9-2. BLOCK DIAGRAMS

•BLOCK DIAGRAM OF THE VIDEO CIRCUITS

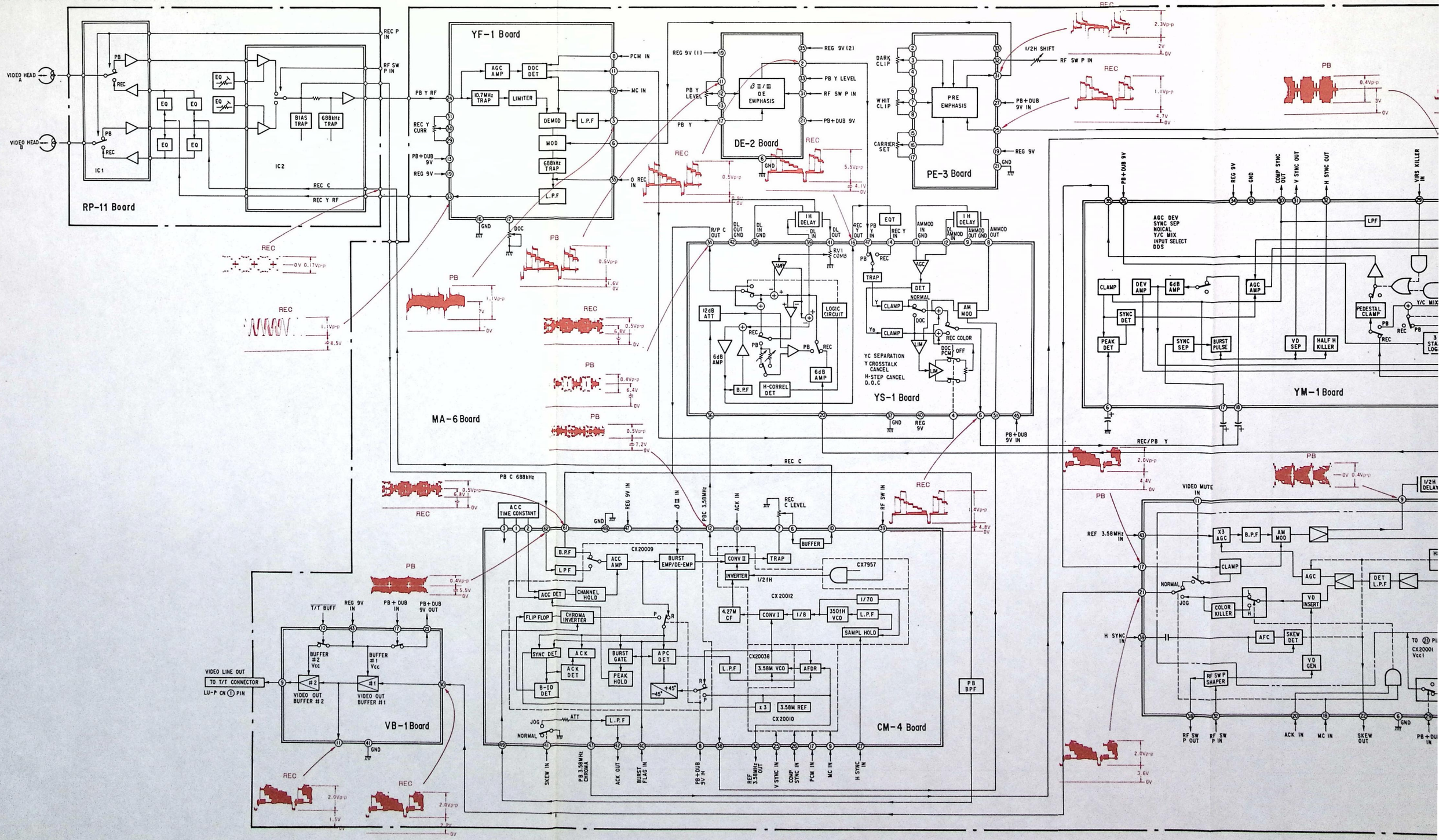

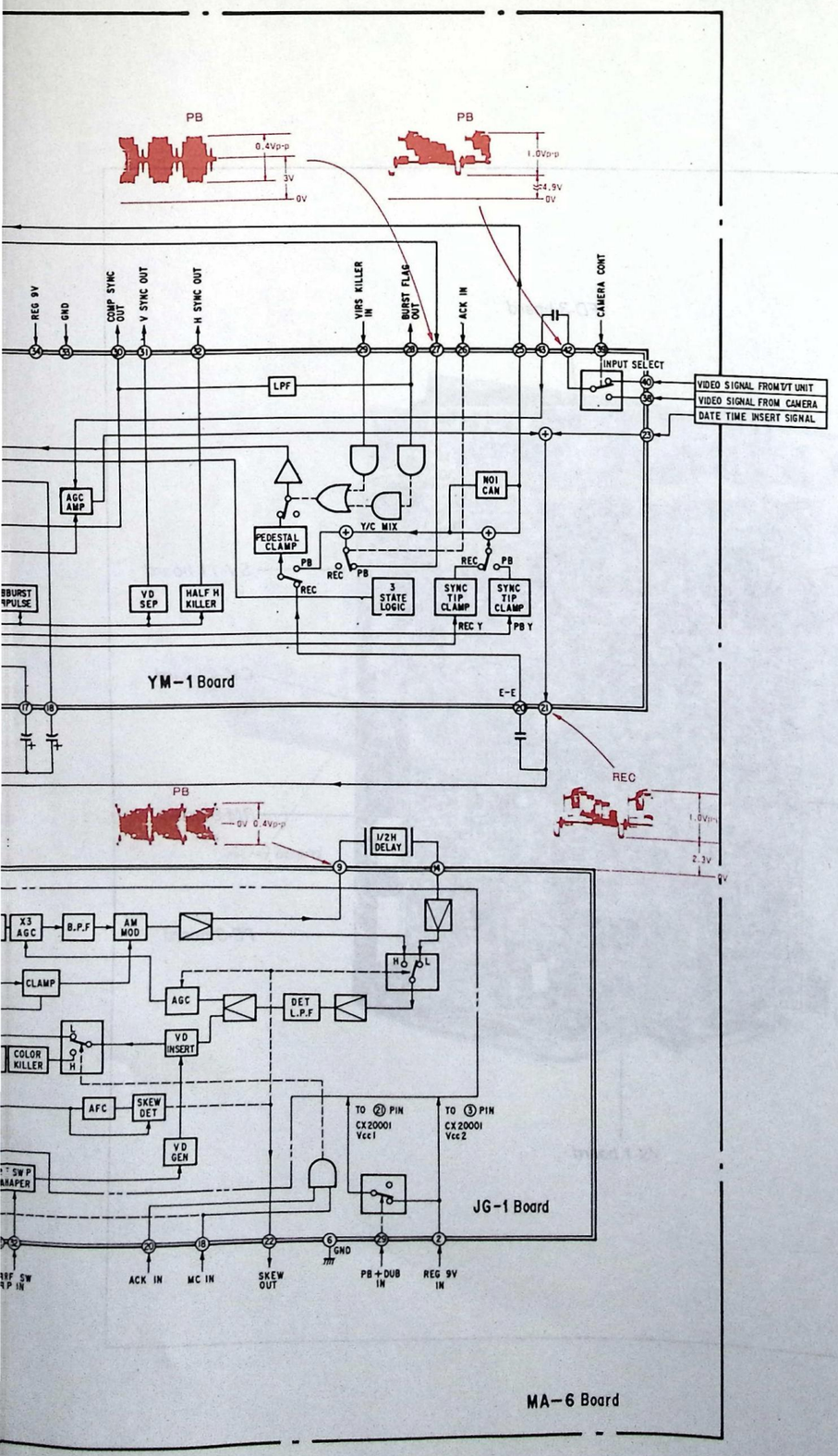
PB
0.4Vp-p
3V
0V
PB
1.0Vp-p
≒4.9V
0V
REG 9V
GND
COMP SYNC OUT
V SYNC OUT
H SYNC OUT
VIRS KILLER IN
BURST FLAG OUT
ACK IN
CAMERA CONT
INPUT SELECT
VIDEO SIGNAL FROM VT UNIT
VIDEO SIGNAL FROM CAMERA
DATE TIME INSERT SIGNAL
LPF
AGC AMP
NOI CAN
Y/C MIX
PEDESTAL CLAMP
PB
REC
3 STATE LOGIC
SYNC TIP CLAMP
REC Y
PB Y
VD SEP
HALF H KILLER
YM-1 Board
E-E
REC
PB
1/2H DELAY
X3 AGC
B.P.F
AM MOD
CLAMP
AGC
DET L.P.F
H
L
COLOR KILLER
VD INSERT
AFC
SKEW DET
VD GEN
TO 21 PIN
CX20001
Vcc1
TO 3 PIN
CX20001
Vcc2
JG-1 Board
ACK IN
MC IN
SKEW OUT
GND
PB+DUB IN
REG 9V IN
MA-6 Board

•REC SYSTEM BLOCK DIAGRAM

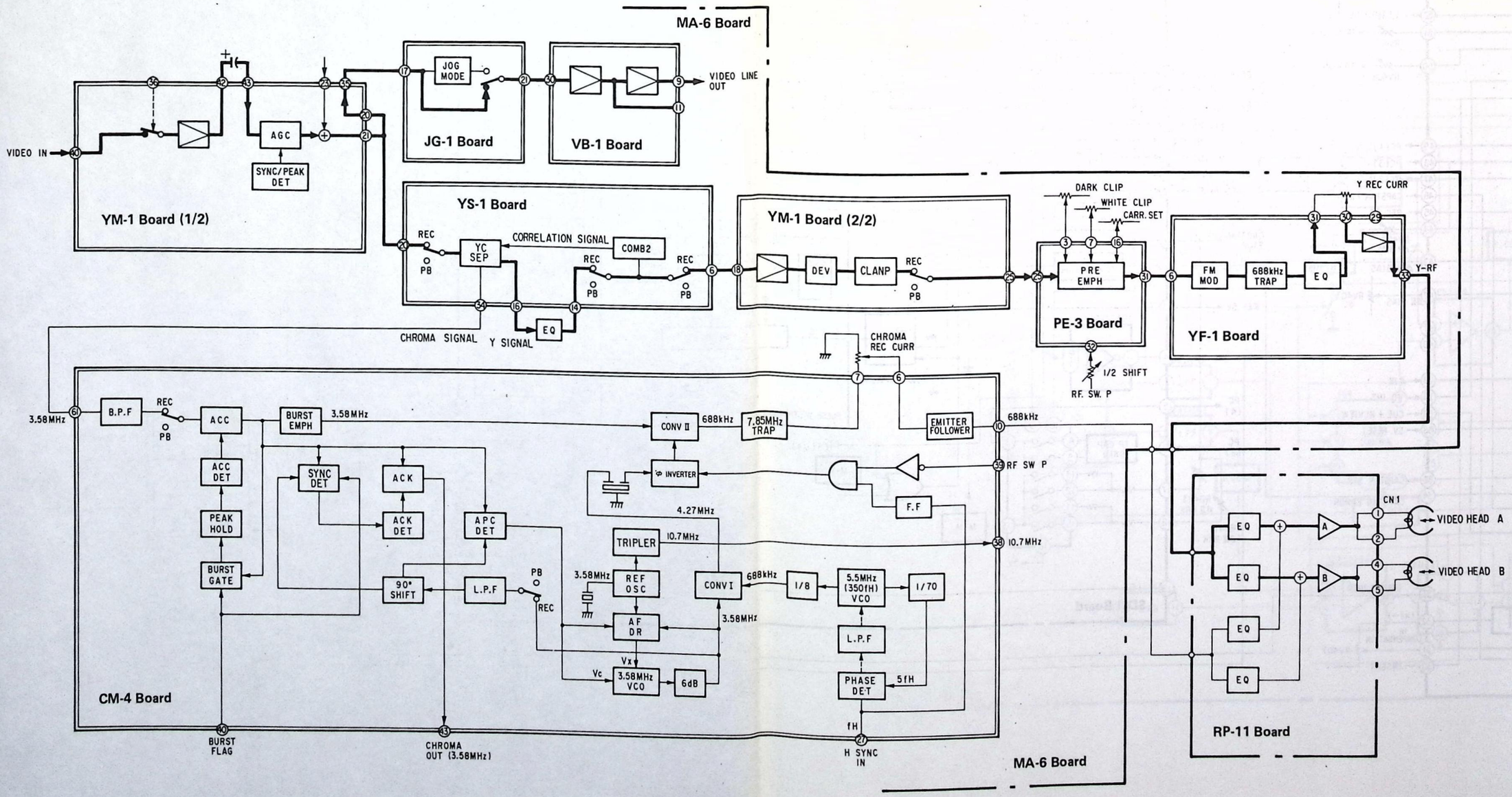

•PB SYSTEM VIDEO BLOCK DIAGRAM

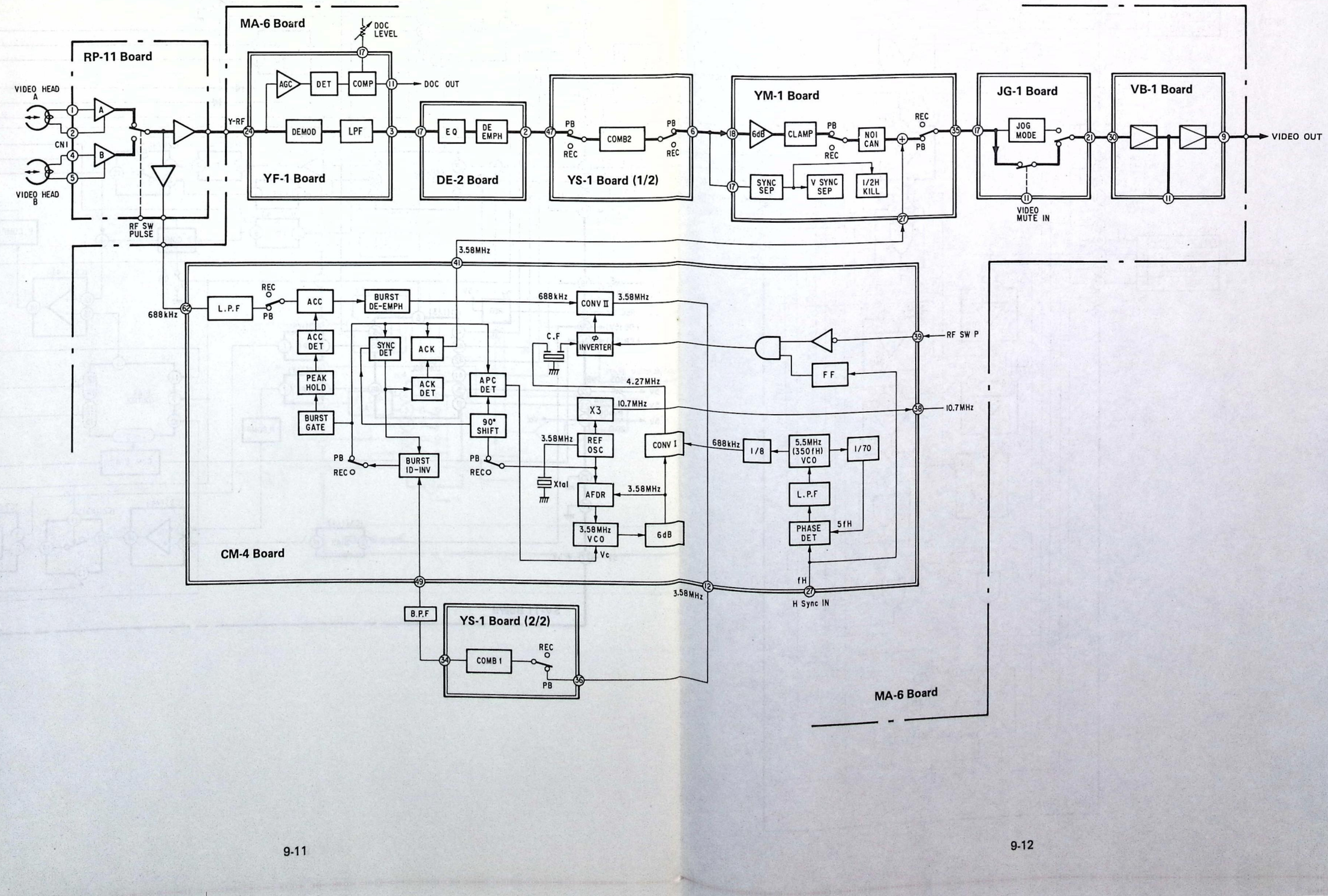

•SERVO CIRCUIT BLOCK DIAGRAM

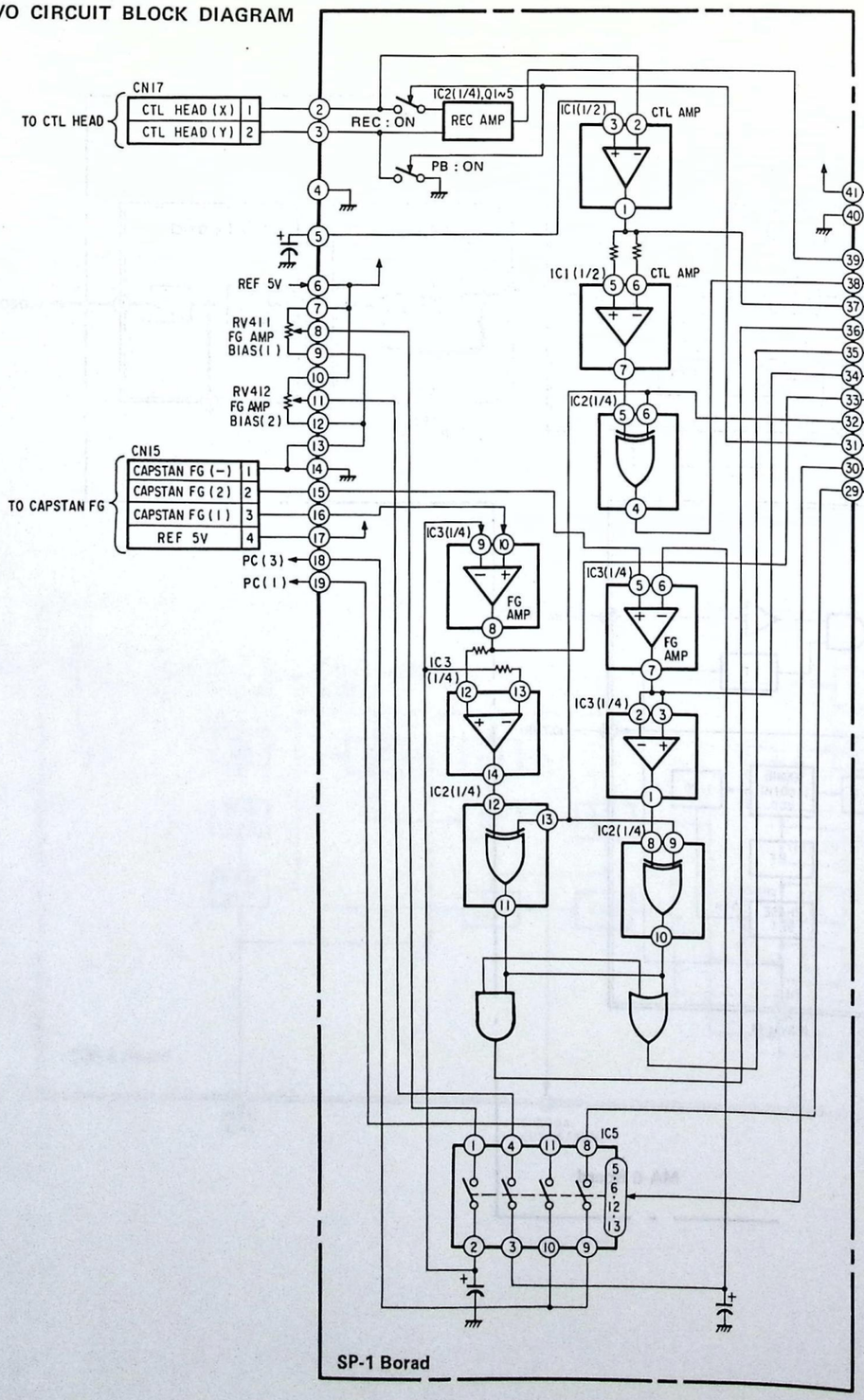

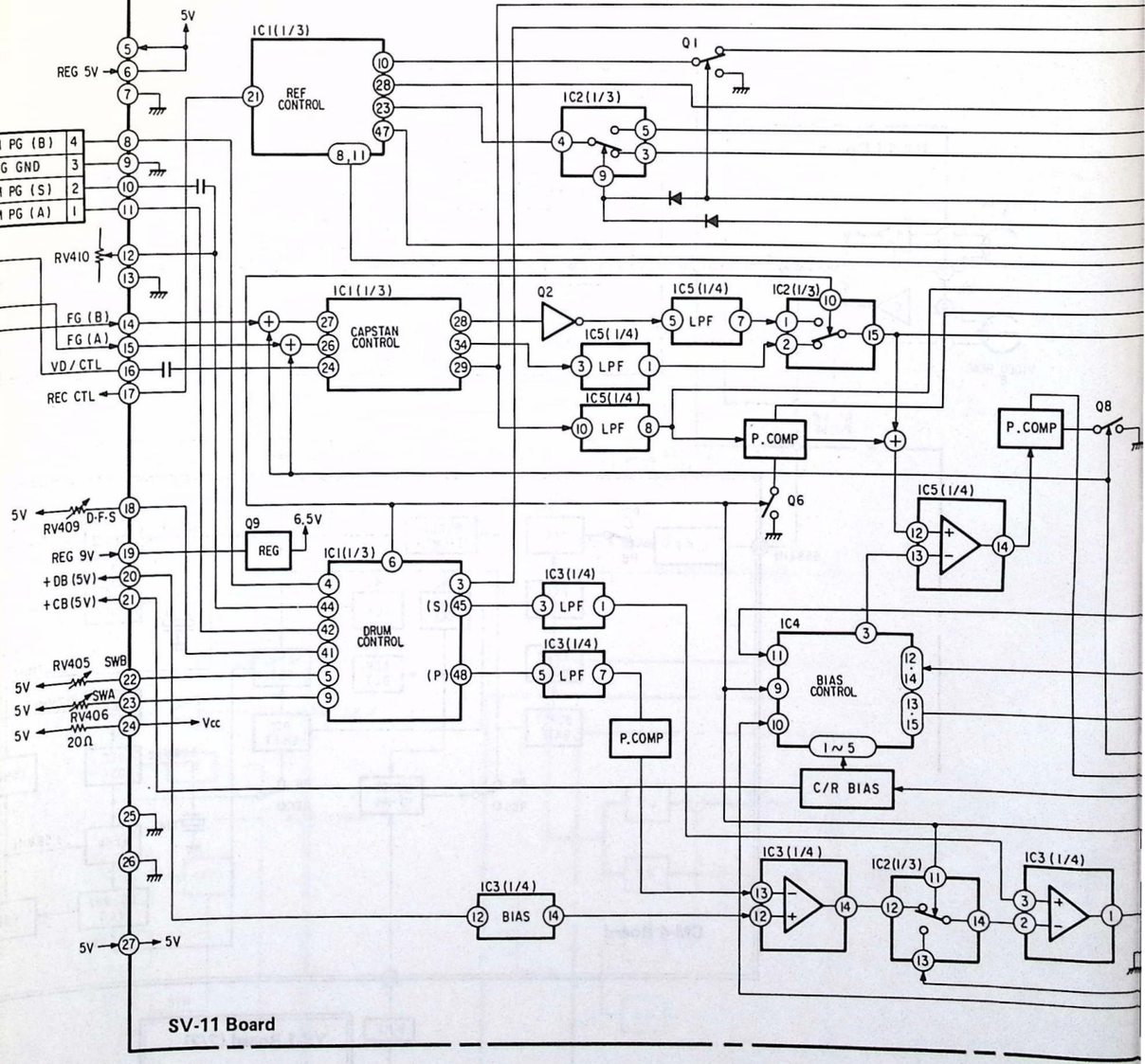

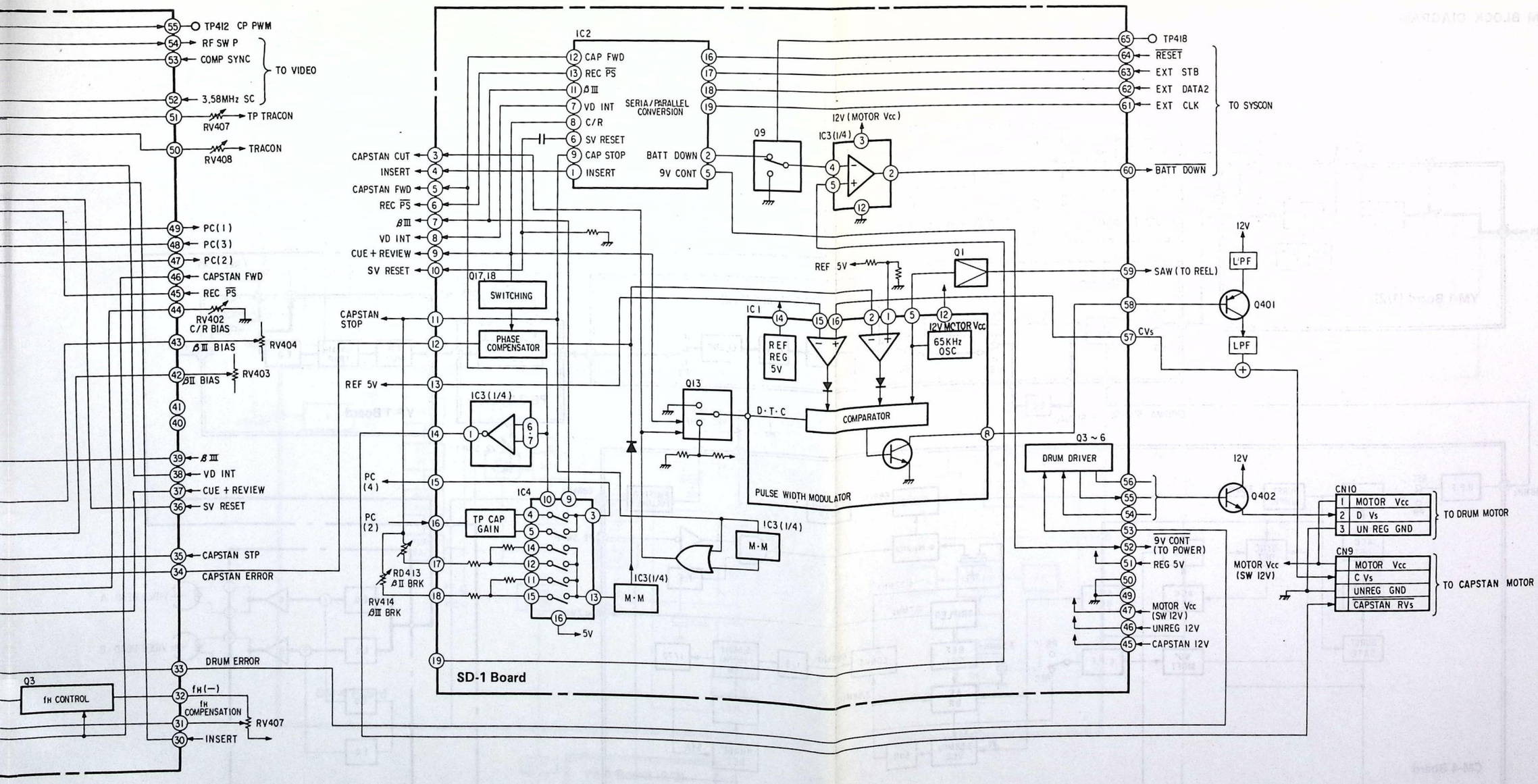
55 TP412 CP PWM
54 RF SW P
53 COMP SYNC
TO VIDEO
52 3.58MHz SC
51 TP TRACON
RV407
50 TRACON
RV408
49 PC(1)
48 PC(3)
47 PC(2)
46 CAPSTAN FWD
45 REC PS
44 RV402 C/R BIAS
43 βIII BIAS
RV404
42 βII BIAS
RV403
41
40
39 βIII
38 VD INT
37 CUE + REVIEW
36 SV RESET
35 CAPSTAN STP
34 CAPSTAN ERROR
33 DRUM ERROR
Q3
fH CONTROL
32 fH(−)
fH COMPENSATION
31
RV407
30 INSERT
IC2
SERIA/PARALLEL CONVERSION
12 CAP FWD
13 REC PS
11 βIII
7 VD INT
8 C/R
6 SV RESET
9 CAP STOP
1 INSERT
16
17
18
19
BATT DOWN 2
9V CONT 5
Q9
12V (MOTOR Vcc)
IC3(1/4) 3 4 5 2 12
CAPSTAN CUT 3
INSERT 4
CAPSTAN FWD 5
REC PS 6
βIII 7
VD INT 8
CUE + REVIEW 9
SV RESET 10
Q17,18
SWITCHING
CAPSTAN STOP 11
PHASE COMPENSATOR
12
REF 5V 13
IC3(1/4) 1 6 7
PC (4) 15
IC4 10 9 4 5 14 12 11 15 13 16 3
PC (2) 16
TP CAP GAIN
RD413 βII BRK
17
RV414 βIII BRK
18
5V
19
IC3(1/4) M·M
IC3(1/4) M·M
REF 5V
Q1
IC1 14 15 16 2 1 5 12
REF REG 5V
12V MOTOR Vcc
65KHz OSC
Q13
D·T·C
COMPARATOR
R
PULSE WIDTH MODULATOR
65 TP418
64 RESET
63 EXT STB
62 EXT DATA2
61 EXT CLK
TO SYSCON
60 BATT DOWN
59 SAW (TO REEL)
58
57 CVs
12V
LPF
Q401
LPF
Q3~6
DRUM DRIVER
56
55
54
53
9V CONT (TO POWER)
52
REG 5V
51
50
49
47 MOTOR Vcc (SW 12V)
46 UNREG 12V
45 CAPSTAN 12V
12V
Q402
CN10
1 MOTOR Vcc
2 D Vs
3 UN REG GND
TO DRUM MOTOR
CN9
MOTOR Vcc
C Vs
UNREG GND
CAPSTAN RVs
TO CAPSTAN MOTOR
MOTOR Vcc (SW 12V)

SD-1 Board

•BLOCK DIAGRAM OF THE REEL SERVO CIRCUIT

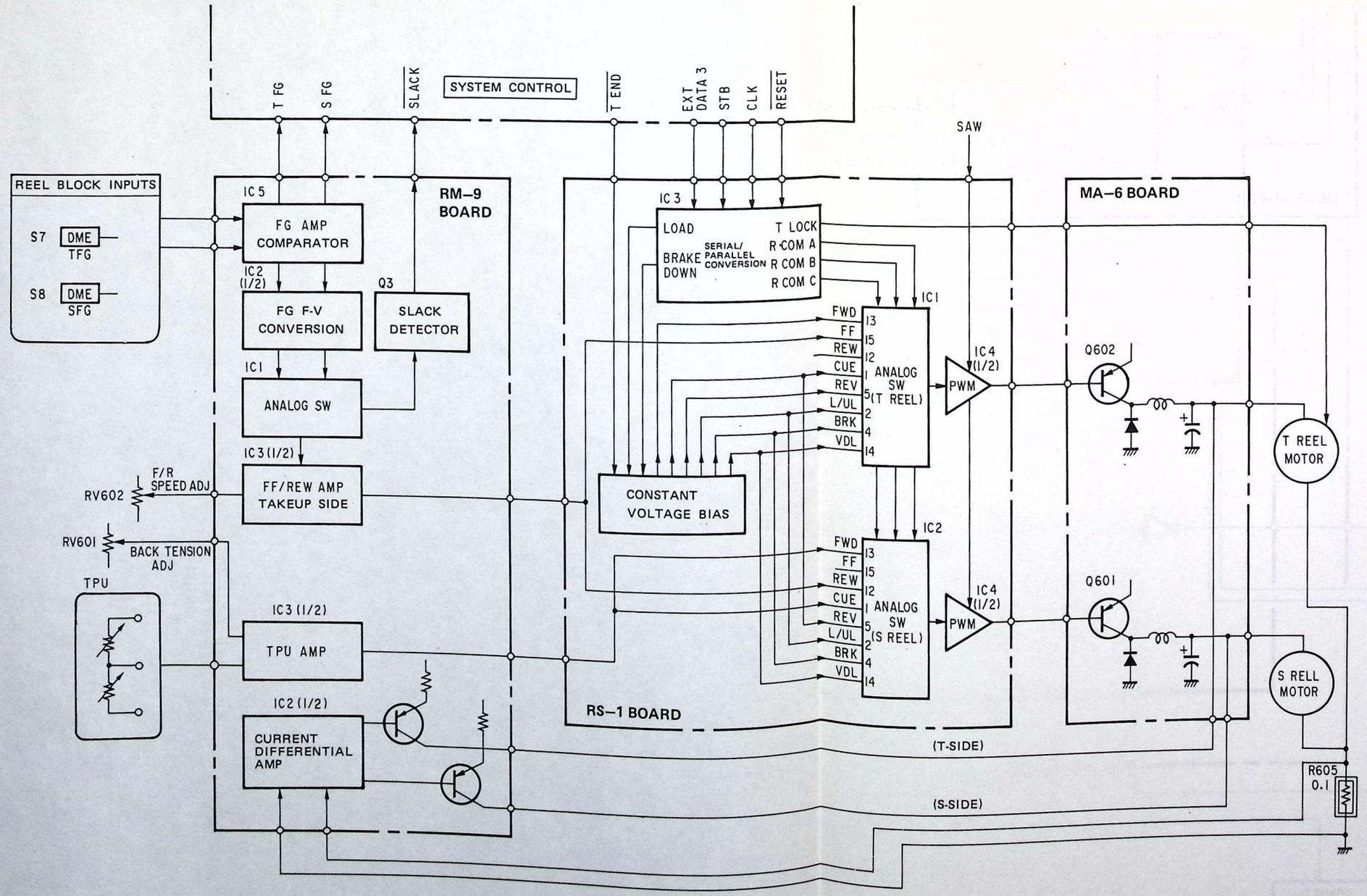

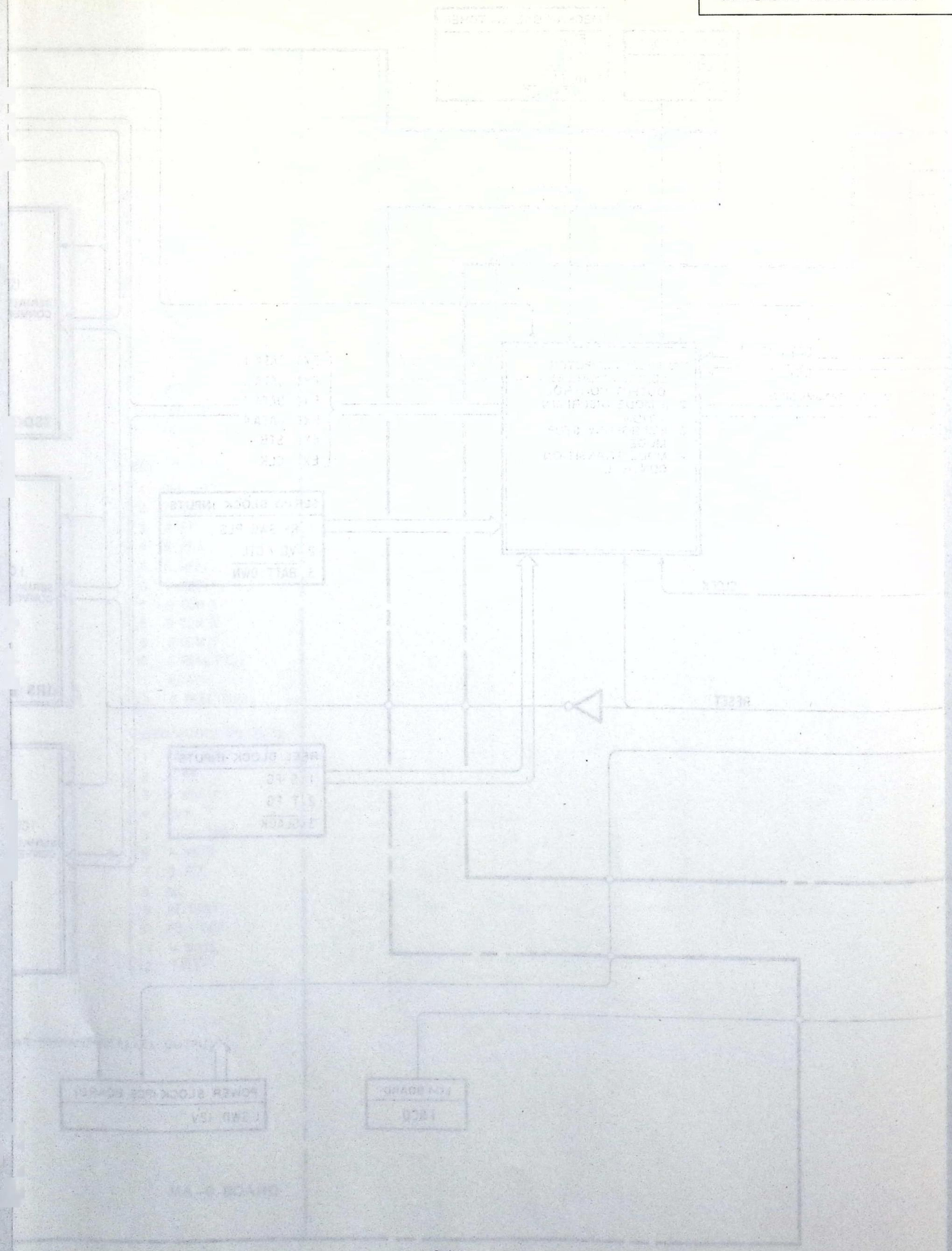

•BLOCK DIAGRAM OF THE SYSTEM CONTROL SECTION

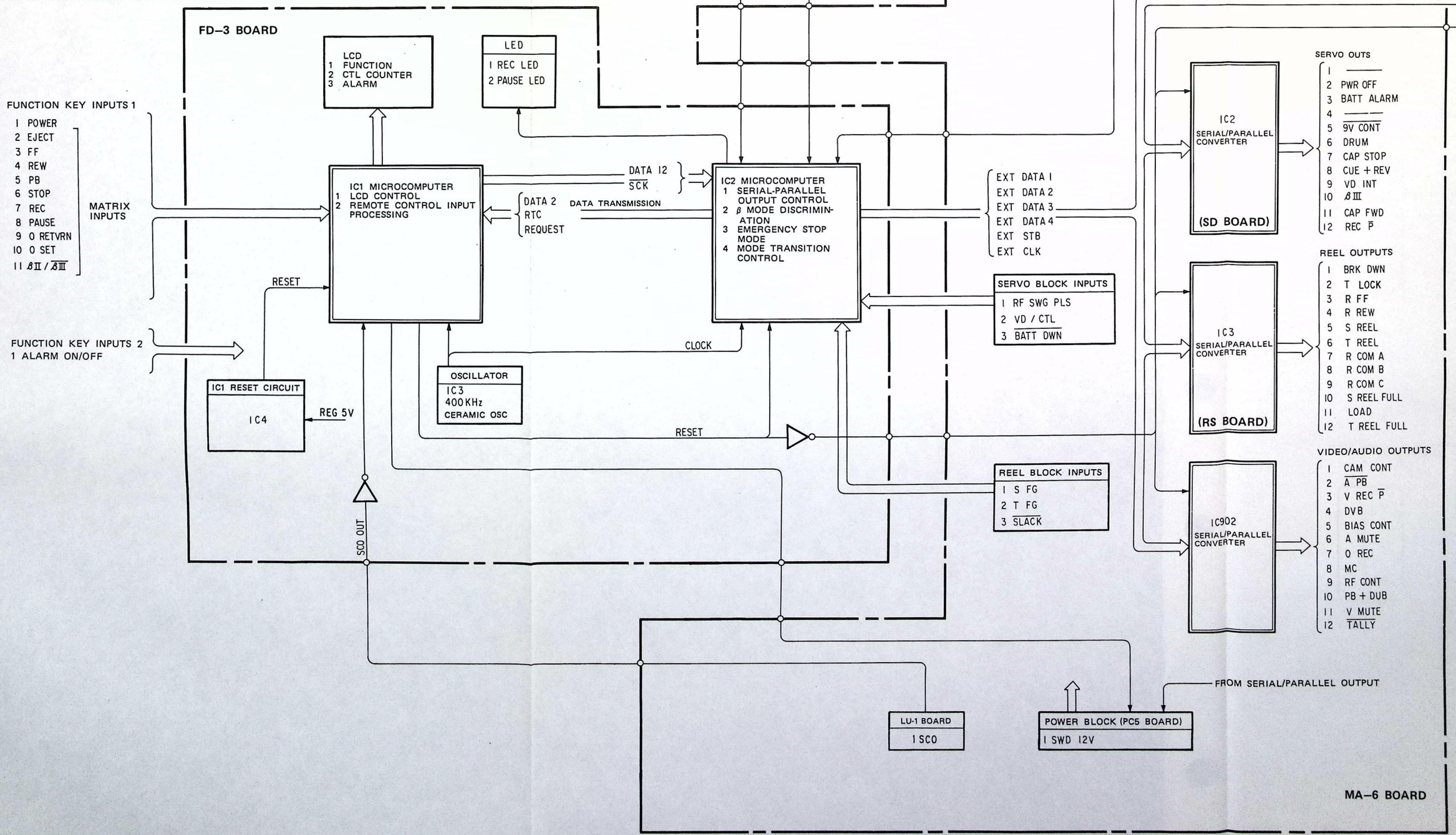

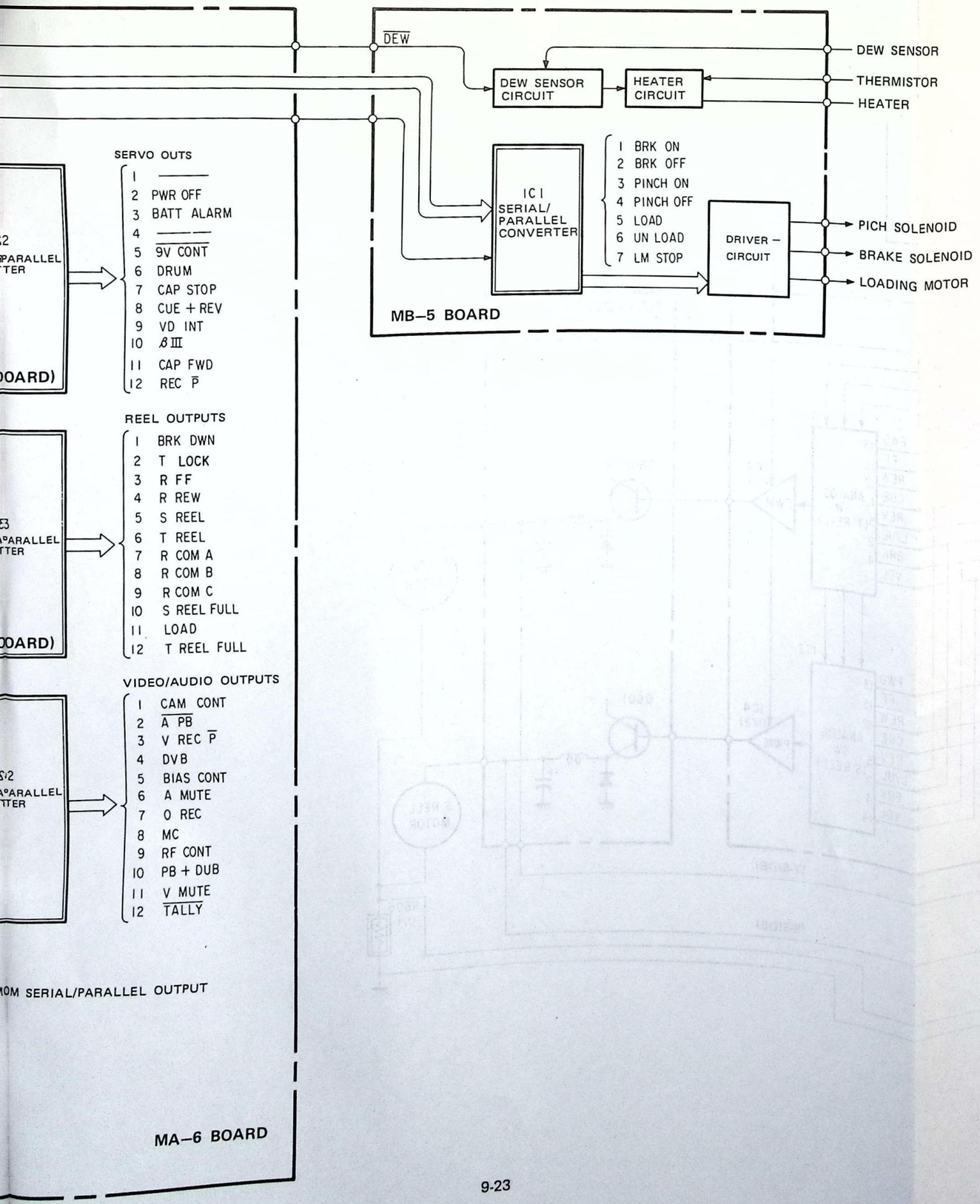
DEW
DEW SENSOR CIRCUIT
HEATER CIRCUIT
DEW SENSOR
THERMISTOR
HEATER
IC I SERIAL/ PARALLEL CONVERTER
1 BRK ON
2 BRK OFF
3 PINCH ON
4 PINCH OFF
5 LOAD
6 UN LOAD
7 LM STOP
DRIVER – CIRCUIT
PICH SOLENOID
BRAKE SOLENOID
LOADING MOTOR
MB–5 BOARD
SERVO OUTS
1 ———
2 PWR OFF
3 BATT ALARM
4 ———
5 9V CONT
6 DRUM
7 CAP STOP
8 CUE + REV
9 VD INT
10 ß III
11 CAP FWD
12 REC P
REEL OUTPUTS
1 BRK DWN
2 T LOCK
3 R FF
4 R REW
5 S REEL
6 T REEL
7 R COM A
8 R COM B
9 R COM C
10 S REEL FULL
11 LOAD
12 T REEL FULL
VIDEO/AUDIO OUTPUTS
1 CAM CONT
2 A PB
3 V REC P
4 DVB
5 BIAS CONT
6 A MUTE
7 O REC
8 MC
9 RF CONT
10 PB + DUB
11 V MUTE
12 TALLY
MA–6 BOARD

•AUDIO SYSTEM BLOCK DIAGRAM

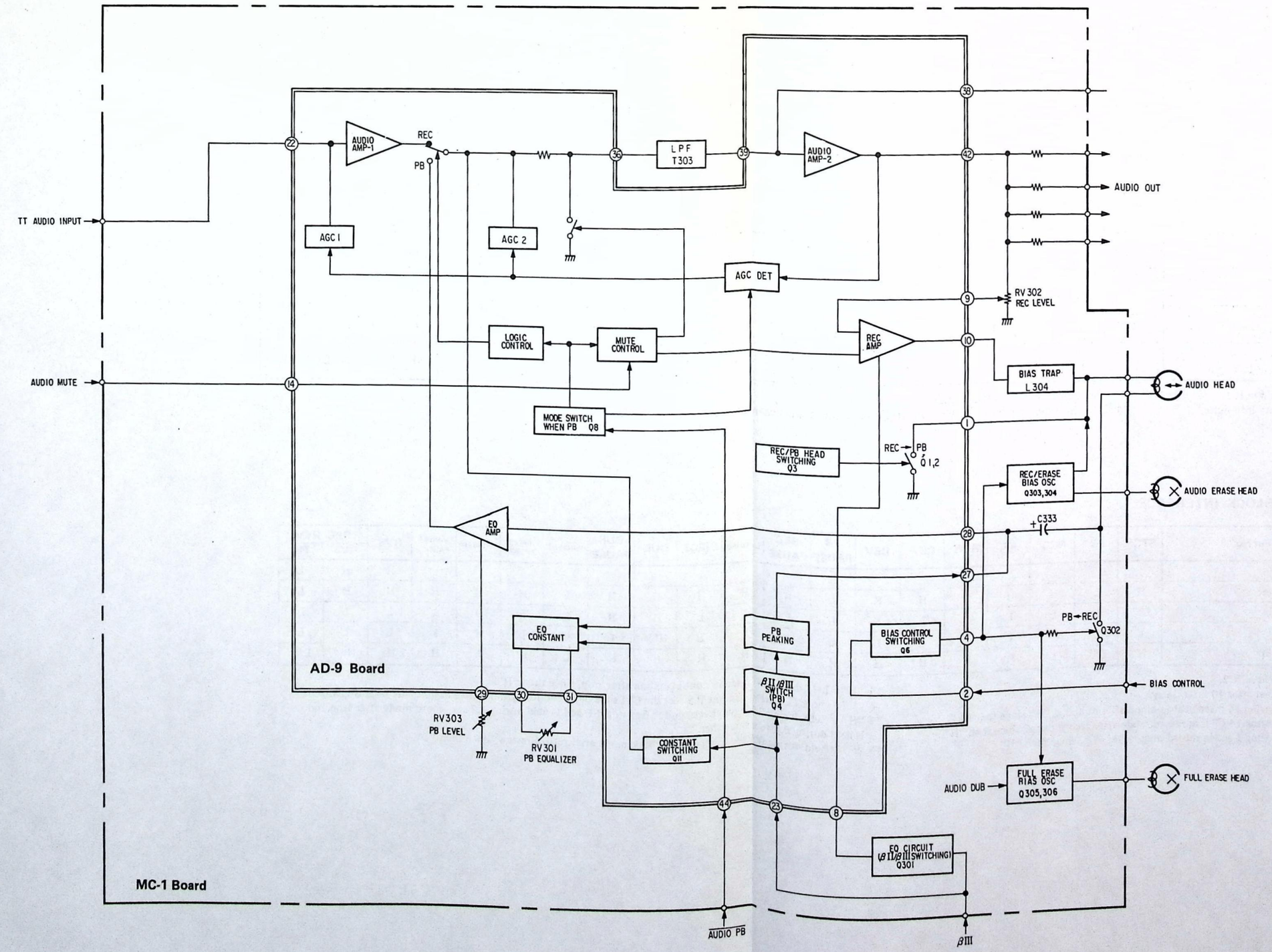

9-3. INTERFACE

●SYSTEM CONTROL SERVO BLOCK INTERFACE

SIGNAL \ MODE	I/O	Pin No.	STOP	PB	REC	FF	REW	CUE	REV	PB PAUSE	REC PAUSE	LOADING	EJECT	A-INSERT	A-INSERT PAUSE	V-INSERT	V-INSERT PAUSE	AV-INSERT	AV-INSERT PAUSE	RVS	REC REV RVS	REC REV PB
VD/CTL	I	(FD-3) IC1-21 pin IC2-44 pin		CTL	VD	CTL	CTL	CTL	CTL					CTL		CTL		CTL		CTL	CTL	CTL
RF SW PLS*2	I		disappear	appear	appear	appear	appear	appear	appear	appear	appear	appear	appear	appear	appear	appear	appear	appear	appear	appear	appear	appear	appear
βIII*2	O	SV-11, 39 pin or SD-1, 7 pin																				
DRUM	O	SD-1, IC2-6 pin	L	H	H	H	H	H	H	H	H	H	H	H	H	H	H	H	H	H	H	H	H
CAP STOP	O	SV-11, 35 pin SD-1, 11 pin	H	L	L	H	H	L	L	H	H	H	H	L	H	L	H	L	H	L	L	L	L
VD INT	O	SV-11, 38 pin	L	H	L	L	L	H	H	H	L	L	L	H	H	L	L	L	L	H	H	H	H
REC·P	O	SV-11, 45 pin SP-1, 31 pin	L	L	H*4	L	L	L	L	L	L	L	L	L	L	L	L	H	L	L	L	L	L
CUE + REV	O	SD-1, 9 pin SV-11, 37 pin	L	L	L	L	L	H	H	L	L	L	L	L	L	L	L	L	L	L	L	L	L
CAP FWD	O	SD-1, 5 pin SV-11, 46 / SP-1, 32 pin	H*3	H	H	H	L	H	L	L	H	H*3	H*3	H	L	H	H	H	H	L	L	L	H

*1 "H" at βIII held in IC2.
*3 30 Hz 50% duty into pulse.
*3 "Don't care" signal in servo section.
*4 "L" is held during the first 12 CTLs in REC/PAUSE mode, then changing to "H" in REC mode.

●SYSTEM CONTROL – AUDIO BLOCK INTERFACE

SIGNAL \ MODE	I/O	Pin No.	STOP	PB	REC	FF	REW	CUE	REV	PB PAUSE	REC PAUSE	LOADING	EJECT	DUB	DUB PAUSE	V-INSERT	V-INSERT PAUSE	AV-INSERT	AV-INSERT PAUSE	RVS	REC REV RVS	REC REV PB
βIII*1	O	CN26, 23 pin																		H	H	L
$\overline{APB}$*2	O	CN27, 27 pin	H	L	H	H	H	H	H	L	H	H	H	H	H	L	H	H	H	H	H	L
DUB	O	CN27, 26 pin	L*3	L	L	L	L	L	L	L	L	L	L	H	H	L	L	H	L	L	L	L
BIAS CONT	O	CN27, 25 pin	L	L	H*4	L	L	L	L	L	L	L	L	H*5	L	L	L	H	L	L	L	L
A MUTE*6	O	CN27, 24 pin	H	L*7	L	H	H	H	H	H	H	H	H	H	H	L	H	L	H	H	H	L*8

*1 "H" at βIII held in IC2.
*2 Level is changed after 40 msec delay.
*3 "H" is held during 15 msec in stop mode after dubbing, "H" since then "L".
*4 "L" is held during 14 CTL in record mode after record pause, since then "H".
"L" is held during 1 sec in record mode after stop, since then "H".
*5 "L" is held during 50 msec in dubbing mode after stop, since then "H".
*6 "H" at no CTL period become 0.5 sec, the CTLs are detected during more than 0.5 sec, the level is changed.
*7 "H" is held during 3 sec playback mode after stop/FF and is held during 1.2 sec record mode after stop and is held during 0.5 sec, since then "L".
*8 "H" is held during 0.5 sec in record playback mode after record review, since then "L".

•SYSTEM CONTROL – REEL BLOCK INTERFACE

SIGNAL \ MODE	I/O	Pin No.	STOP	PB	REC	FF	REW	CUE	REV	PB PAUSE	REC PAUSE	LOADING	EJECT	A-INSERT	A-INSERT PAUSE	V-INSERT	V-INSERT PAUSE	AV-INSERT	AV-INSERT PAUSE	RVS	REC RVS	REV PB
T FG	I	FD-3, IC2-41 pin	——	←					*1													→
S FG	I	FD-3, IC2-42 pin	——	←					*1													→
$\overline{\text{SLACK}}$	I	FD-3, IC2-25 pin	——	——	——	"H" NORMALITY "L" ABNORMLITY	"H" NORMALITY "L" ABNORMALITY	——	——	——	——	——	——	——	——							
BRK DOWN*2	O	RS-1, IC3-1 pin	L	L	L	L	L	L	L	L	L	L	L	L	L	L	L	L	L	L	L	L
$\overline{\text{TEND}}$*6	O	CN22, 25 pin																				
T LOCK	O	RS-1, IC3-2 pin	L	L	L	L	L	L	L	L	L	H	H	L	L	L	L	L	L	L	L	L
R FF	O	RS-1, IC3-3 pin	L	L	L	H	L	L	L	L	L	L	L	L	L	L	L	L	L	L	L	L
R REW	O	RS-1, IC3-4 pin	L	L	L	L	H	L	L	L	L	L	L	L	L	L	L	L	L	L	L	L
R COM A	O	RS-1, IC3-7 pin	*3	L	L	L	H	L	H	L*4	L*5	L	L	L	L*3	L	L	L	L	L	H	L
R COM B	O	RS-1, IC-8 pin	*3	L	L	H	H	L	L	L	L	H	H	L	L*3	L	L	L	L	L	L	L
R COM C	O	RS-1, IC3-9 pin	*3	L	L	L	L	H	H	L	L*5	H	H	L	L*3	L	L	L	L	L	L	L
$\overline{\text{T REEL}}$	O	RS-1, IC3-6 pin	L	H	H	H	L	H	H	H	H	H	H	H	H	H	H	H	H	H	H	H
$\overline{\text{S REEL}}$	O	RS-1, IC3-5 pin	L	H	H	L	H	H	H	H	H	H	H	H	H	H	H	H	H	H	H	H
$\overline{\text{R LOAD}}$	O	RS-1, IC3-12 pin	L	L	L	L	L	L	L	L	L	H	L	L	L	L	L	L	L	L	L	L
T REEL FULL	O	RS-1, IC3-13 pin	L	L	L	L	L	L	L	L	L	*7	L	L	L	L	L	L	L	L	L	L
S REEL FULL	O	RS-1, IC3-11 pin	L	L	L	L	L	L	L	L	L	*7	L	L	L	L	L	L	L	L	L	L

*1 The number of pulses is equal to the product of 60 rpm times the number of reel revolutions.
*2 Electromagnetic brake change-over signal.
*3 "Don't care" signal in reel section.
*4 "H" for 12 sec during overlap writing correcting in PB. P → REC. P → REC (clean edits of separate recorded segments)
100 msec in STOP → REC. P → REC
*5 "H" at REC REVIEW.
*6 "L" at Tape End.
*7 "H" at cassette-in held during 100 msec (supply reel) and 600 msec (take-up reel).

•SYSTEM CONTROL – VIDEO BLOCK INTERFACE

SIGNAL \ MODE	I/O	Pin No.	STOP	PB	REC	FF	REW	CUE	REV	PB PAUSE	REC PAUSE	LOADING	EJECT	A-INSERT	A-INSERT PAUSE	V-INSERT	V-INSERT PAUSE	AV-INSERT	AV-INSERT PAUSE	RVS	REC RVS	REV PB
O REC	O	YF-1, 35 pin IC902-7 pin	L	L	H*1	L	L	L	L	L	L	L	L	L	L	H	L	H	L	L	L	L
PB + DUB	O	IC902-11 pin	L	H	L	L	L	H	H	H	L	L	L	H	H	L	L	L	L	H	H	H
VMUTE*2	O	IC902-12 pin	L	L*3	L	L	L	L	L	L	L	L	L	L*3	L	L	L	L	L	L	L	L*8
$\overline{\beta\text{III}}$*9	O	CM-4, 5 pin																				
VREC·$\overline{\text{P}}$*4	O	CN2, 12 pin IC902-3 pin	L	L	H*6	L	L	L	L	L	L	L	L	L	L	H*6	L	H*6	L	L	L	L
MC	O	YF-1, 40 pin JG-1, 18 pin, IC902-8 pin	L	L	L	L	L	H	H	H	L	L	L	L	H	L	L	L	L	L	H	L

*1
*2 "H" at no-CTL period lasts 0.5 sec, changed to "L" at the CTL is continiously detected for more than 0.5 sec.
*3 "H" for 3 sec in STOP → PB or DUB mode.
*4 Latched output by flip-flop with RF SW PULSES as clock pulses.
*5 "H" held during 14 CTL in record mode after record pause, since then "L".
*6 "H" held during 0.5 sec in playback mode after reverce mode.
*7 "H" at βIII held in IC2.

•SYSTEM CONTROL – POWER BLOCK INTERFACE

SIGNAL \ MODE	I/O	Pin No.	STOP	PB	REC	FF	REW	CUE	REV	PB PAUSE	REC PAUSE	LOADING	EJECT	DUB	DUB PAUSE	V-INSERT	V-INSERT PAUSE	AV-INSERT	AV-INSERT PAUSE	RVS	REC REV RVS	REC REV PB
$\overline{\text{9V CONT}}$	O	DR901, 3 pin SD-1, IC2-5 pin	L*1	L	L	L	L	L	L	L	L	L	L	L	L	L	L	L	L	L	L	L

*1 "H" at BATTERY mode.

•SYSTEM CONTROL – TUNER, TIMER BLOCK INTERFACE

SIGNAL \ MODE	I/O	Pin No.	STOP	PB	REC	FF	REW	CUE	REV	PB PAUSE	REC PAUSE	LOADING	EJECT	DUB	DUB PAUSE	V-INSERT	V-INSERT PAUSE	AV-INSERT	AV-INSERT PAUSE	RVS	REC REV RVS	REC REV PB
$\overline{\text{REMOCON}}$*1	I	FD-3, IC1-15 pin																				
PB + DUB	O	IC902-11 pin	L	H	L	L	L	H	H	H				H	H	L	L	L	L	H	H	H
V REC·$\overline{\text{P}}$	O	IC902-3 pin	L	L	H*2	L	L	L	L	L	L	L	L	L	L	H*2	L	H*2	L	L	L	L
DWN/$\overline{\text{JP}}$	O	FD-3, IC2-20 pin	L	L	L	L	H	L	H	L	L	L	L	L	L	L	L	L	L	H	H	L

*1 12 bit serial data signal corresponding to remote control.
*2 "H" held during 14 CTL in record mode after record-pause, since then "L".

•SYSTEM CONTROL – MECHANISM BLOCK INTERFACE

SIGNAL \ MODE	I/O	Pin No.
BRAKE ON*1	O	MB-5, IC1-1 pin
BRAKE OFF*1	O	MB-5, IC1-2 pin
PINCH ON*1	O	MB-5, IC1-3 pin
PINCH OFF*1	O	MB-5, IC1-4 pin
LOAD	O	MB-5, IC1-5 pin
UNLOAD	O	MB-5, IC1-6 pin
LM STOP*1	O	MB-5, IC1-7 pin
REC ENABLE*2	I	FD-3, IC2-12 pin
$\overline{\text{CASSETTE IN}}$*2	I	FD-3, IC2-28 pin
$\overline{\text{DEW SENS}}$	I	FD-3, IC2-18 pin
$\overline{\text{LEND}}$*2	I	FD-3, IC2-21 pin
$\overline{\text{ULEND}}$*2	I	FD-3, IC2-22 pin
$\overline{\text{END}}$	I	CN19, 4 pin
$\overline{\text{TOP}}$	I	CN19, 5 pin

*1 Brake plunger, Pinch plunger, Loading Motor control signal.
*2 "L" at switches ON.
*3 "L" detecting dew.
*4 "L" at tape end.
*5 "L" at tape top.

9-4. TIMING CHART

●CAPSTAN PHASE (REC) TIMING CHART

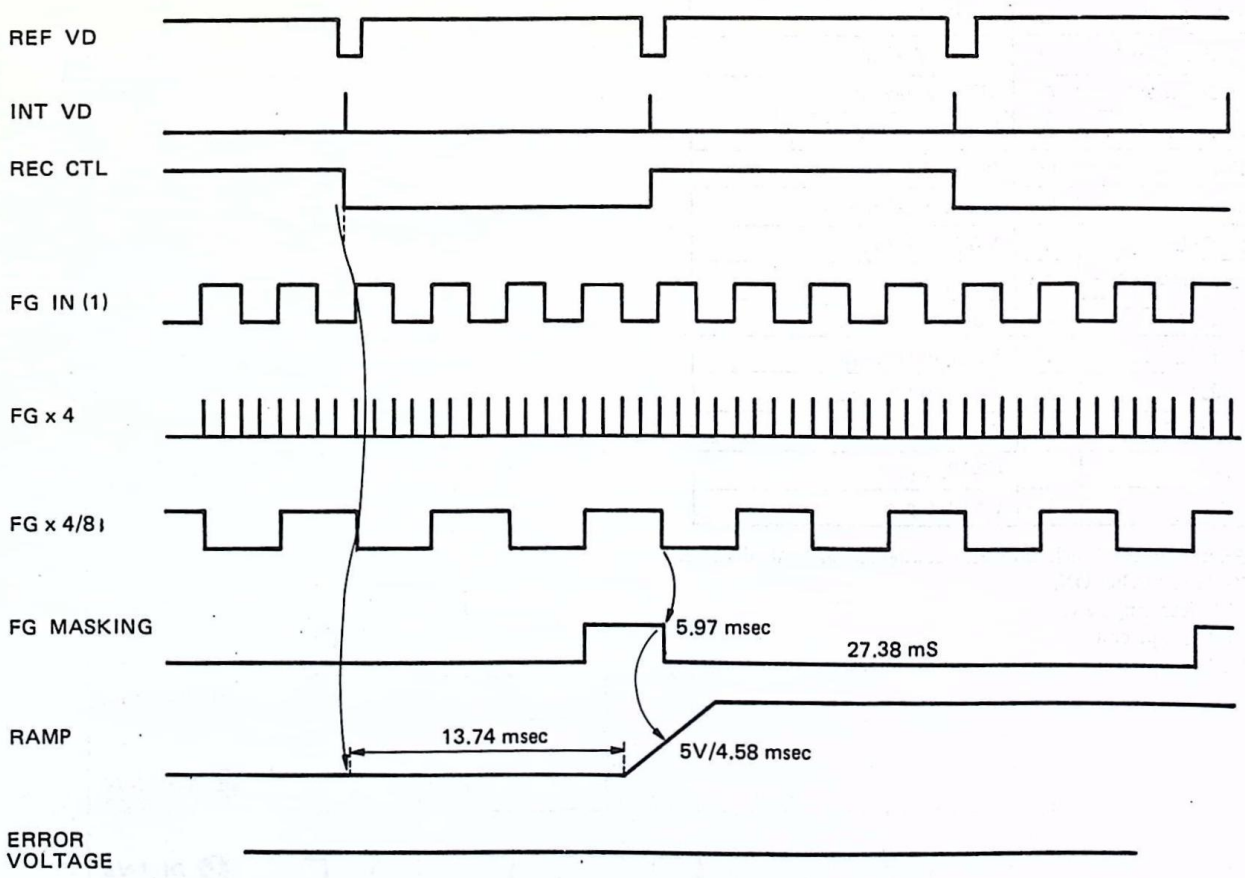

●CAPSTAN PHASE (PB) TIMING CHART

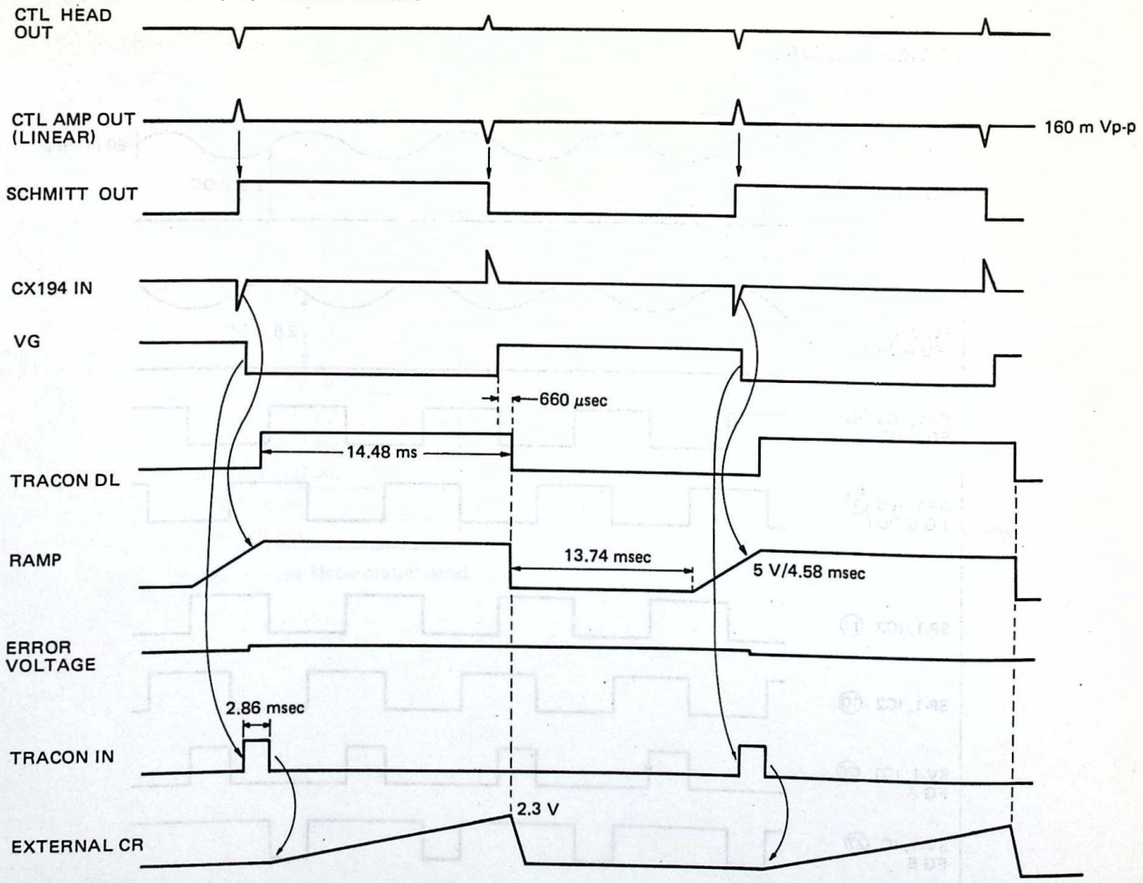

●CAPSTAN SPEED SYSTEM TIMING CHART

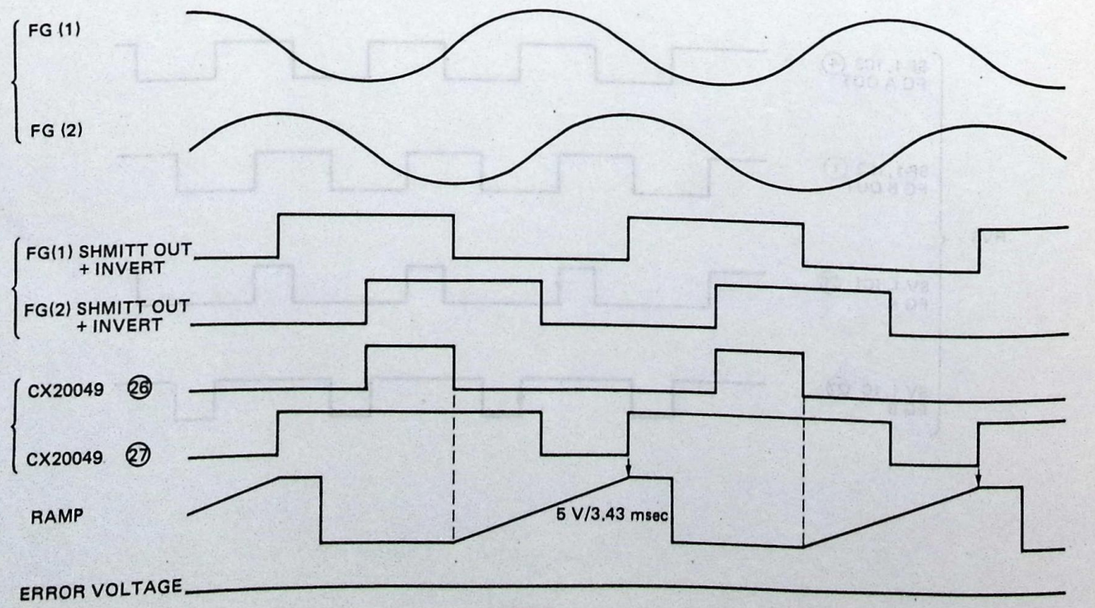

●DRUM PHASE SYSTEM TIMING CHART

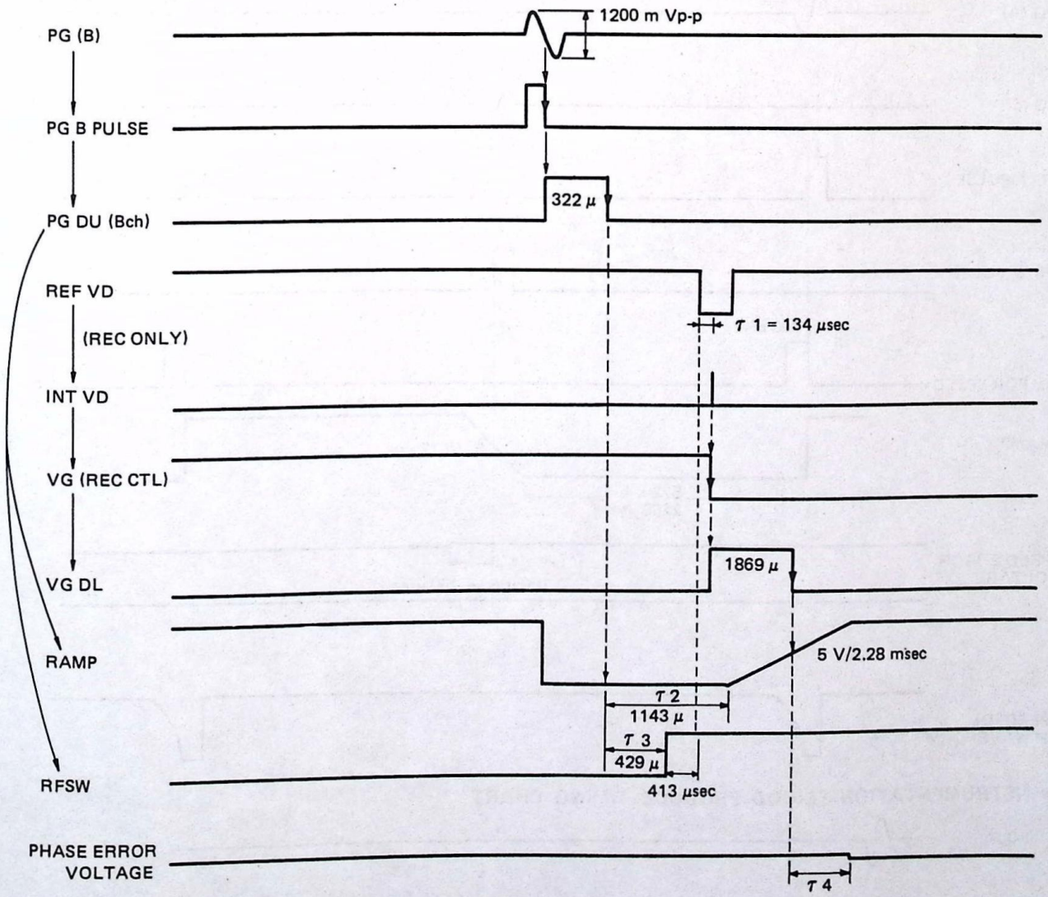

τ1: REF VD DETECTION DELAY TIME
τ2, τ3: DIGITAL DL
τ4: DATA EXCHANGE TIME

●INSTRUMENTATION COUNTER TIMING CHART

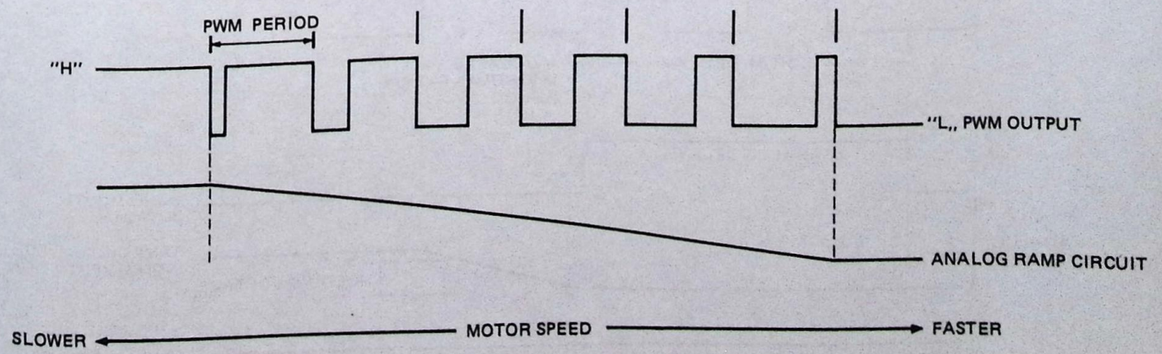

●DRUM SPEED SYSTEM TIMING CHART

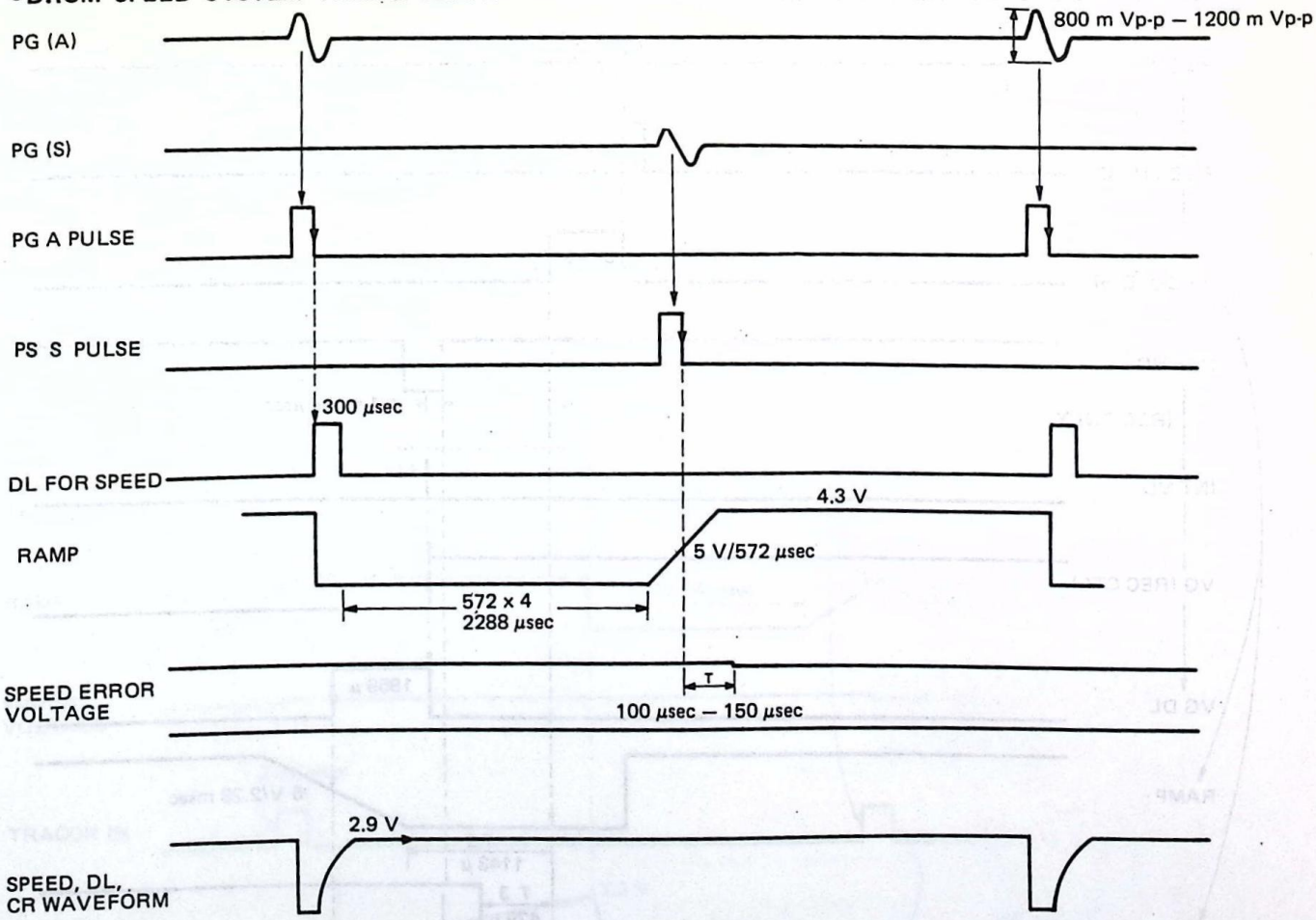

●INSTRUMENTATION PERIOD PRODUCE TIMING CHART

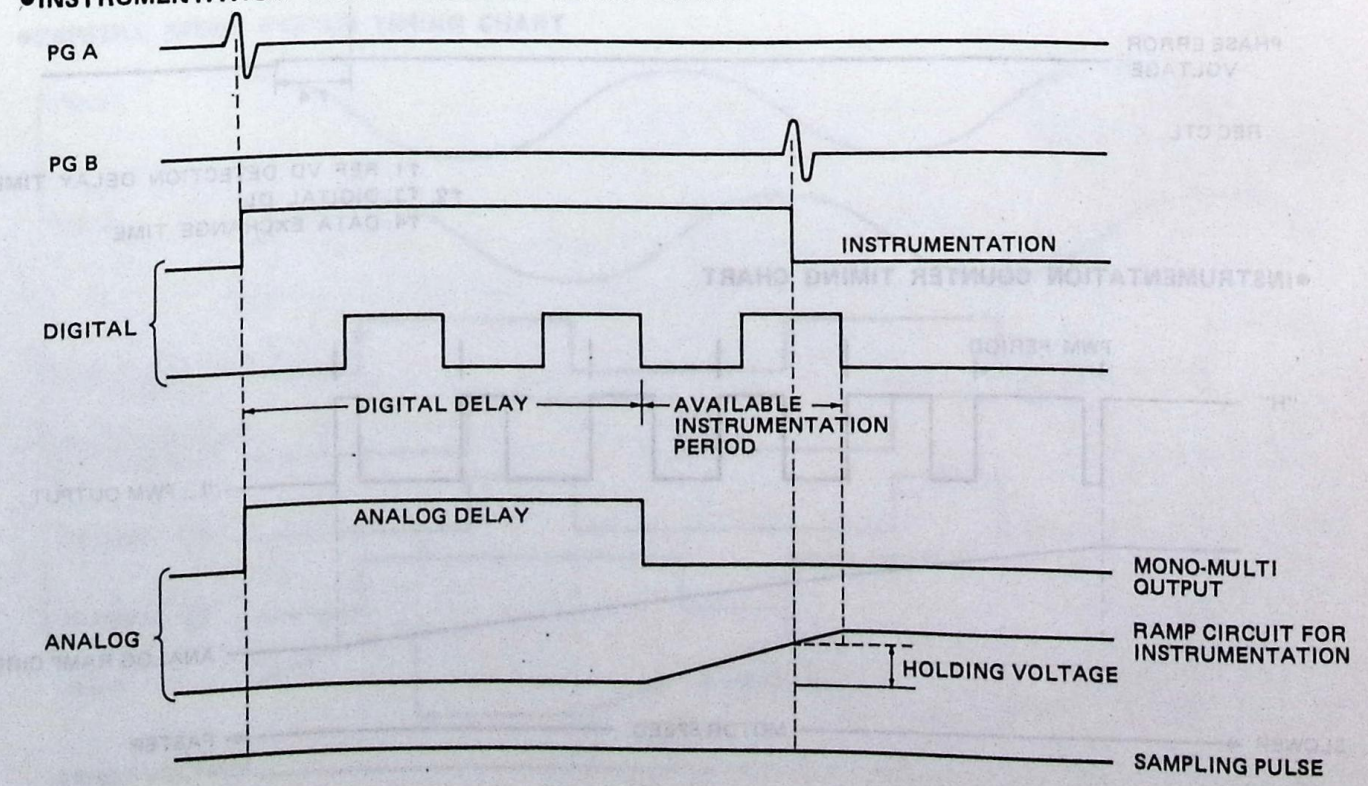

•FG CIRCUIT TIMING CHART

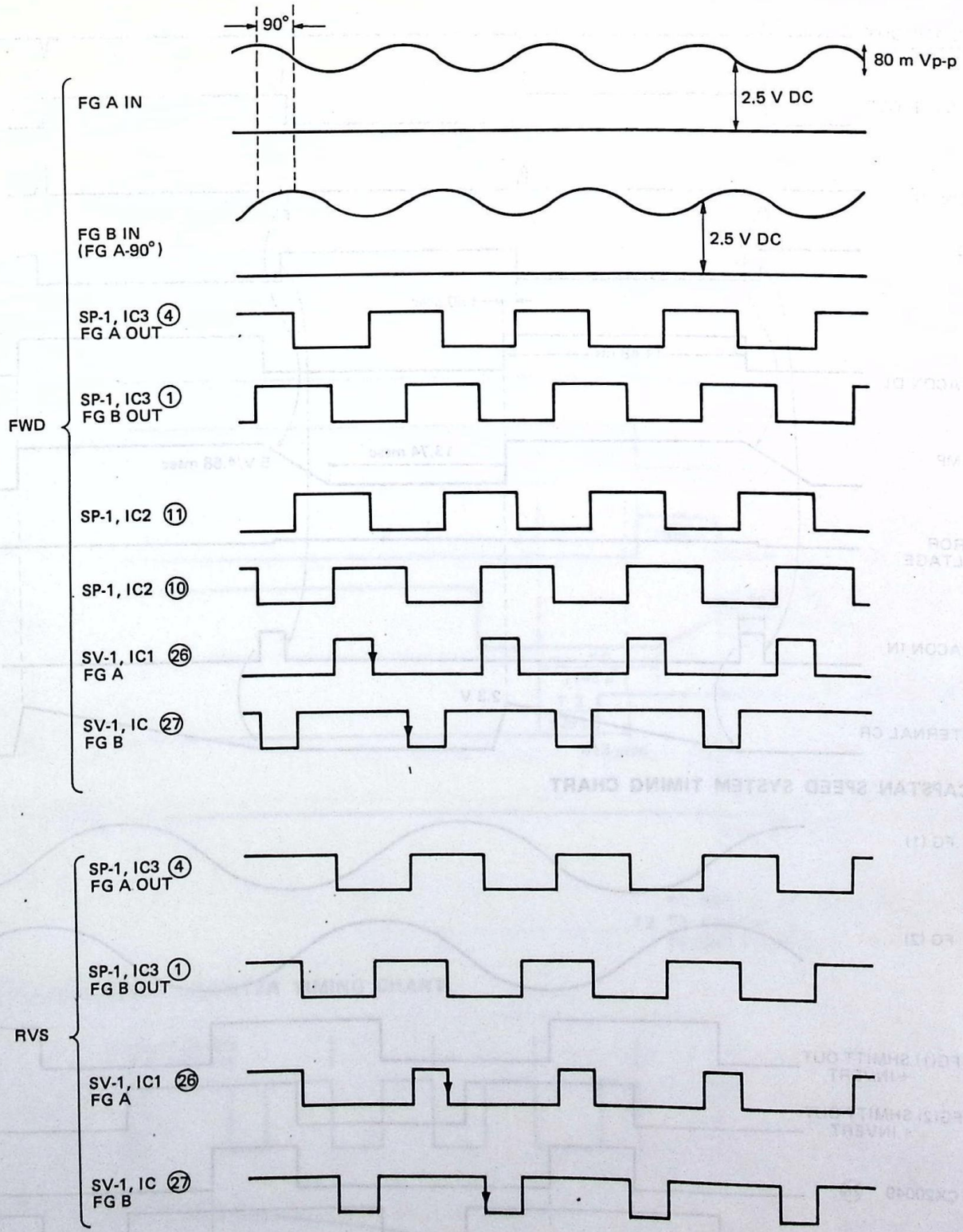

●PG-A, B, S TIMING CHART

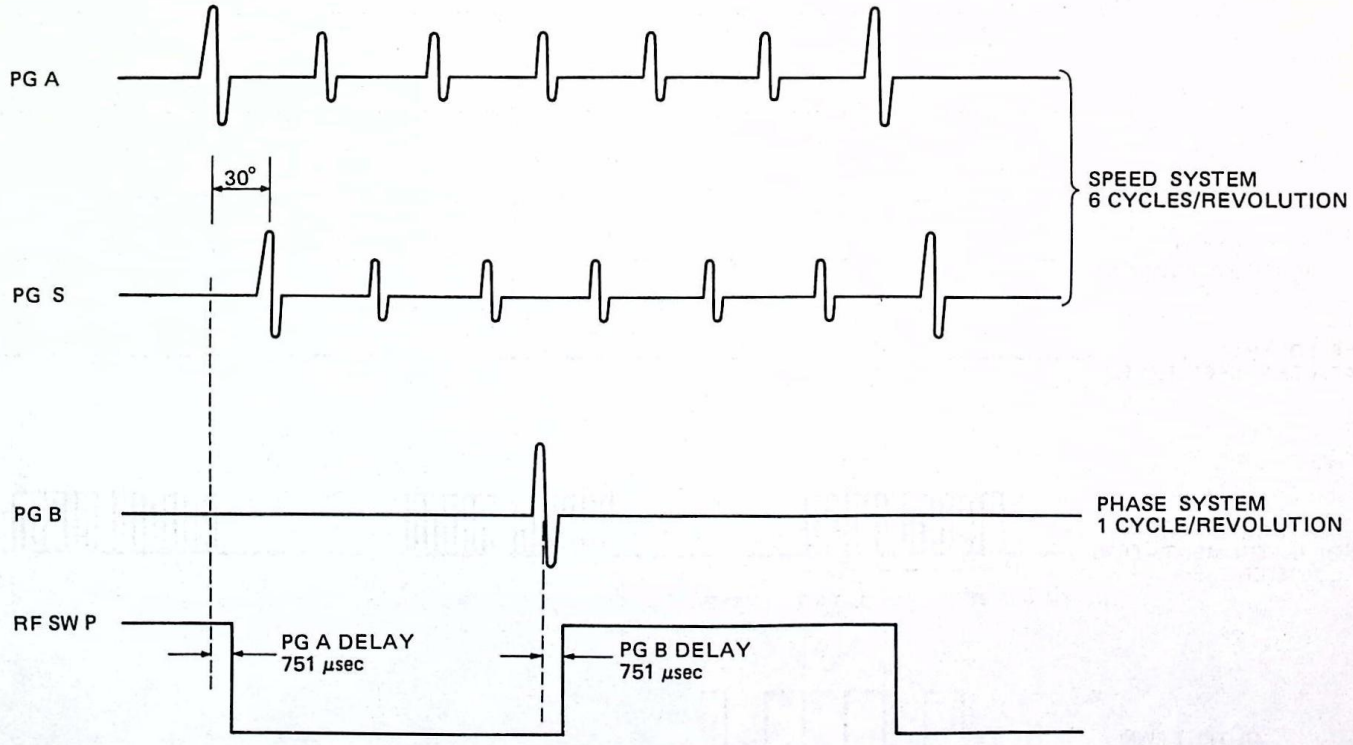

●PG-B (REC/PB) TIMING CHART

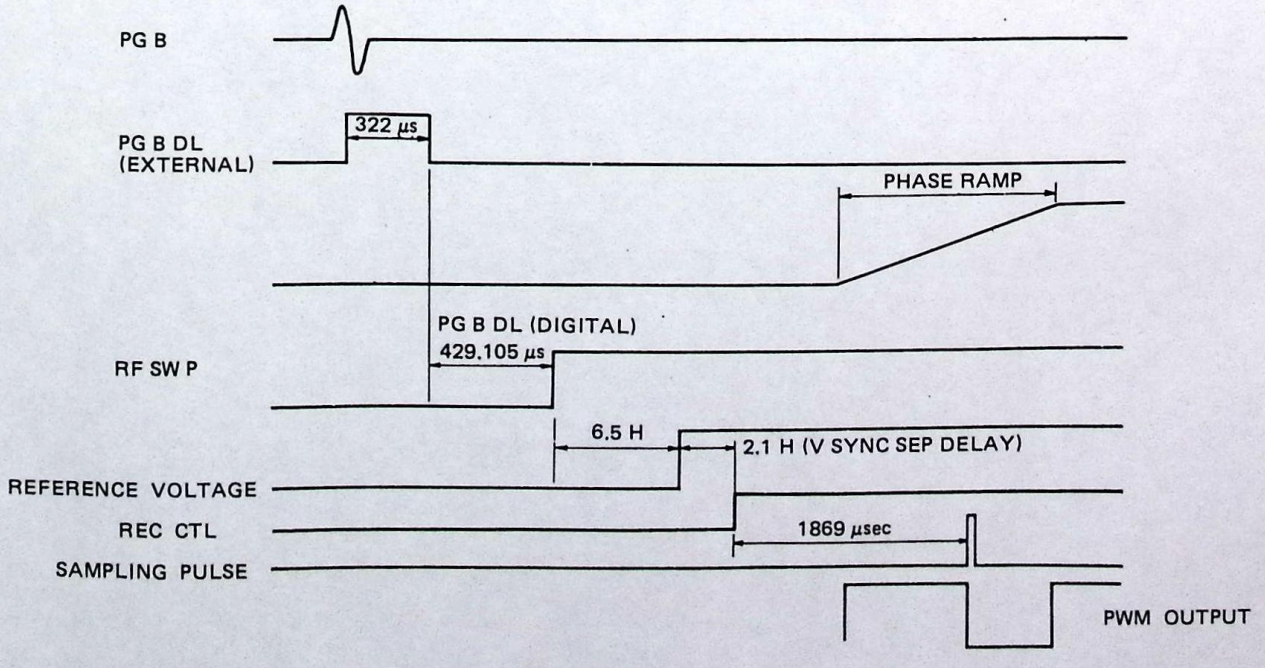

●BASIC SERVO CIRCUIT TIMING CHART

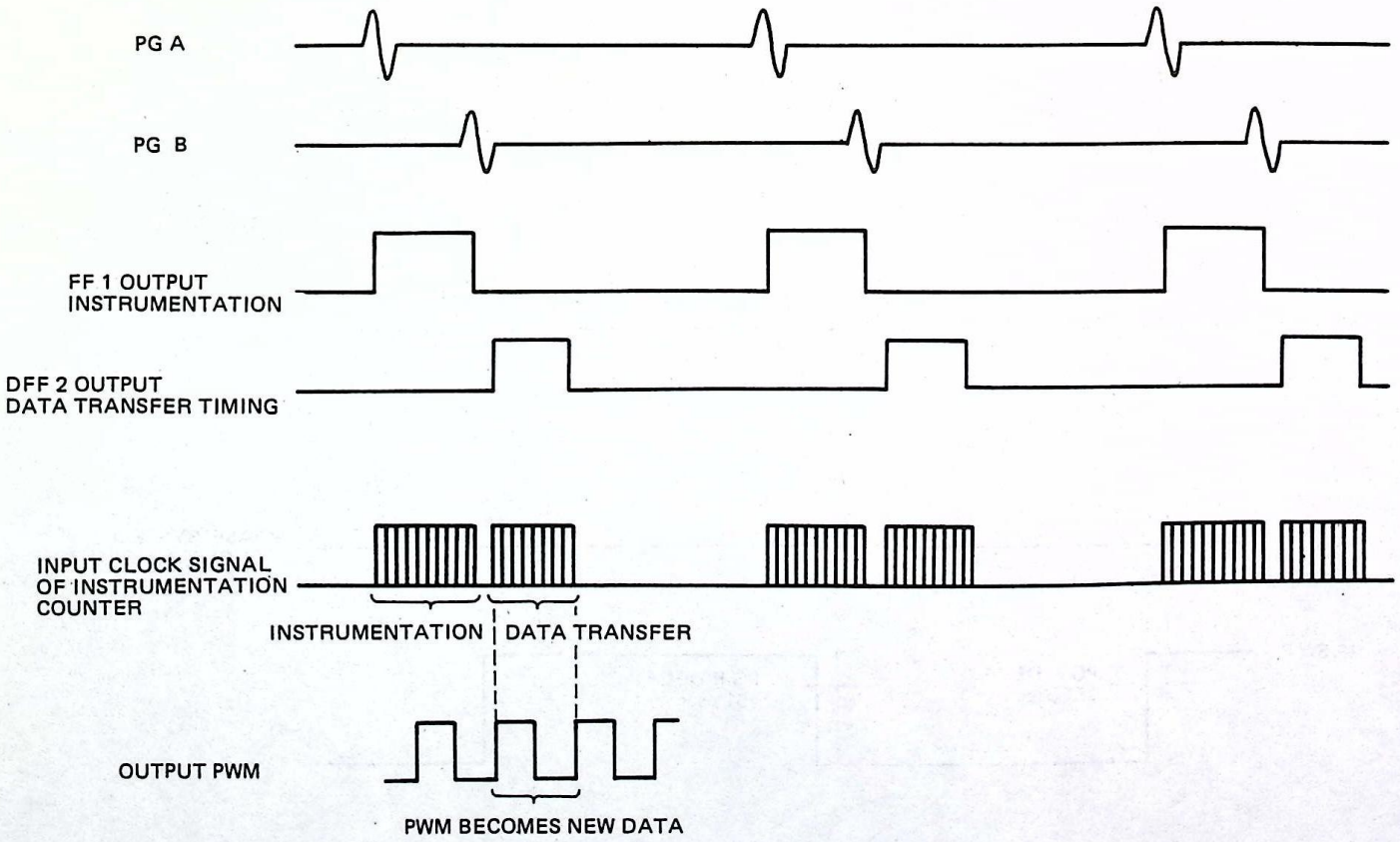

●SP-1 CTL CIRCUIT TIMING CHART

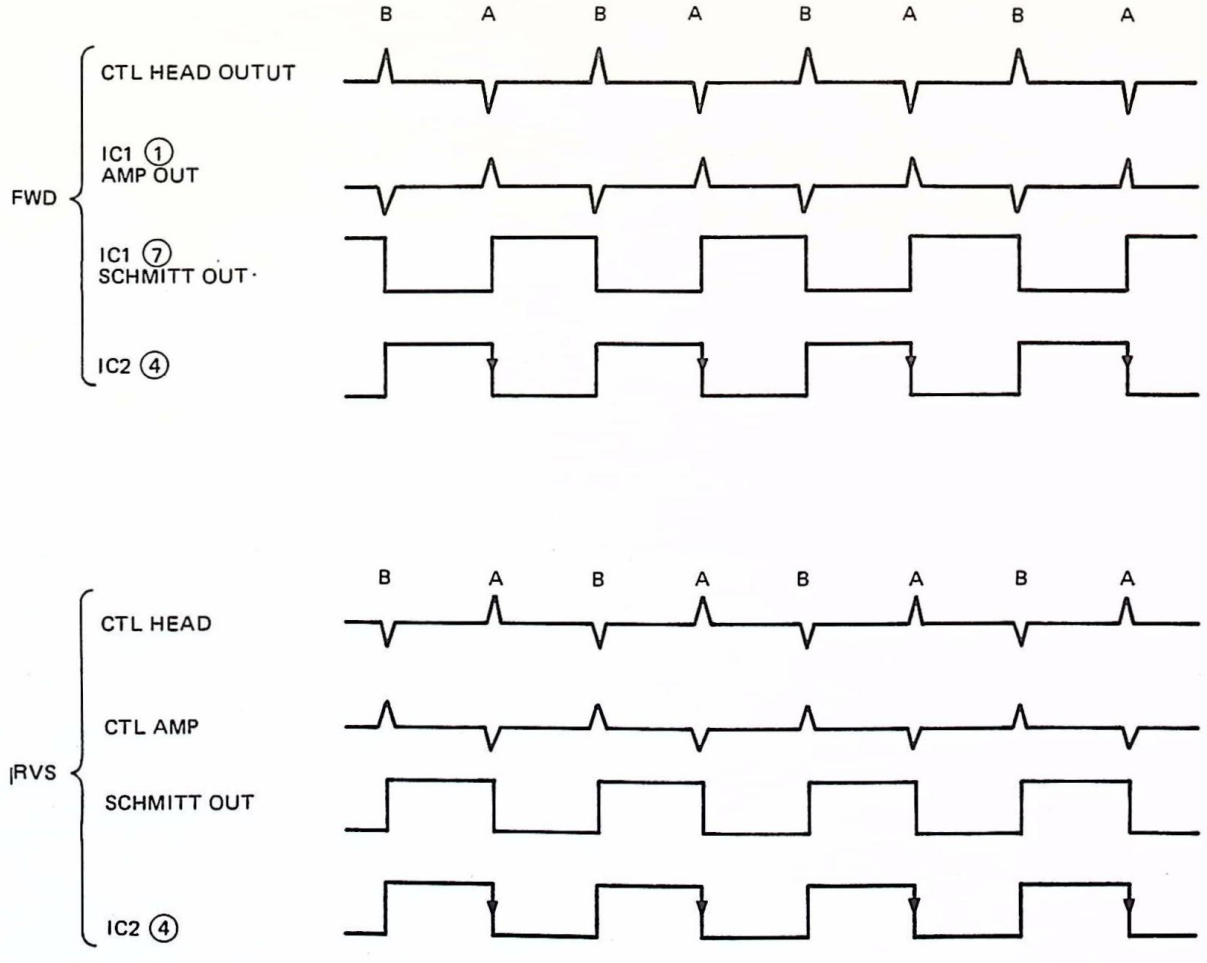

●CTL-RF SW P TIMING CHART

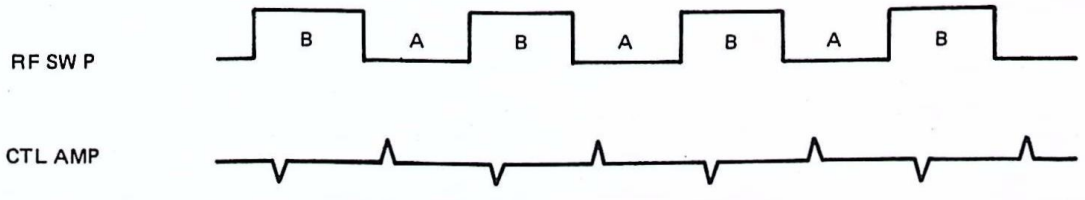

•PAUSE ON/OFF TIMING CHART

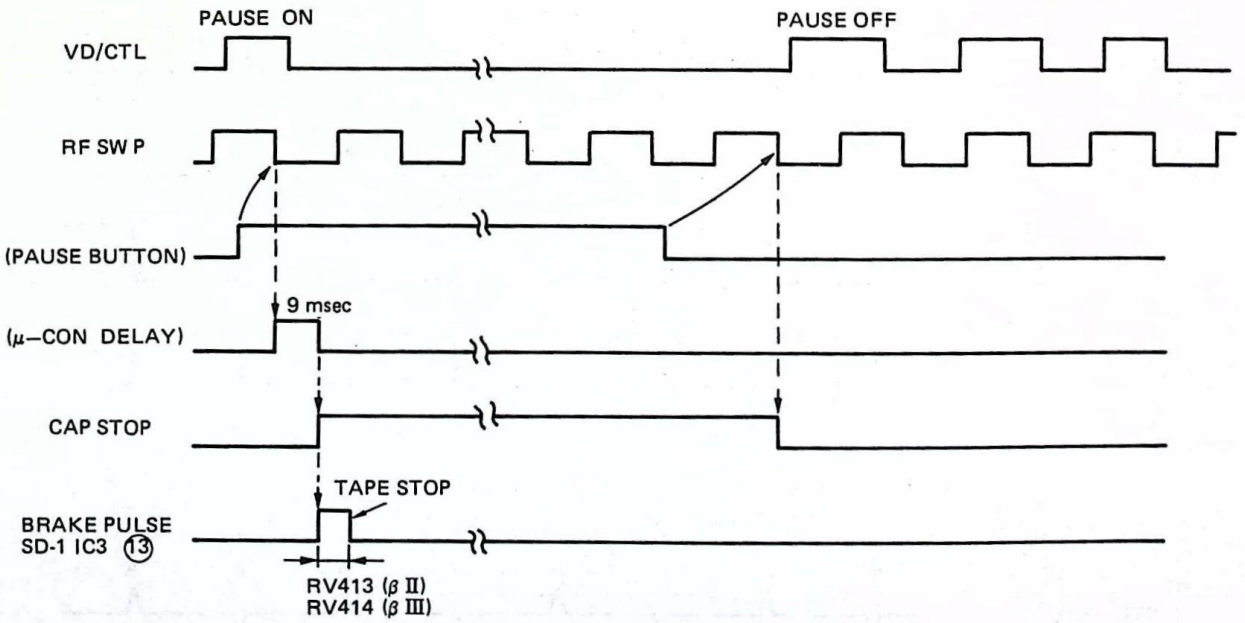

The noise position can be adjusted by the tracking control VR as the tape is stopped using the "RF SW P" signal as a reference.

9-5. AUDIO LEVEL DIAGRAM

•PB SYSTEM

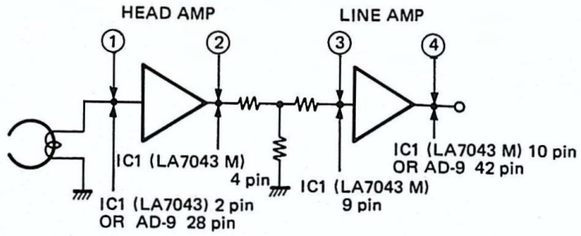

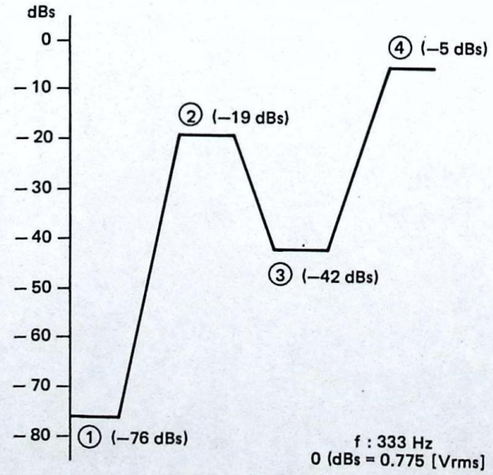

•REC SYSTEM

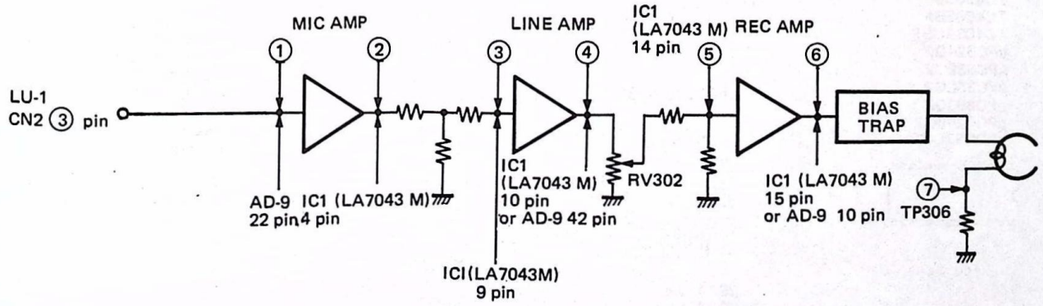

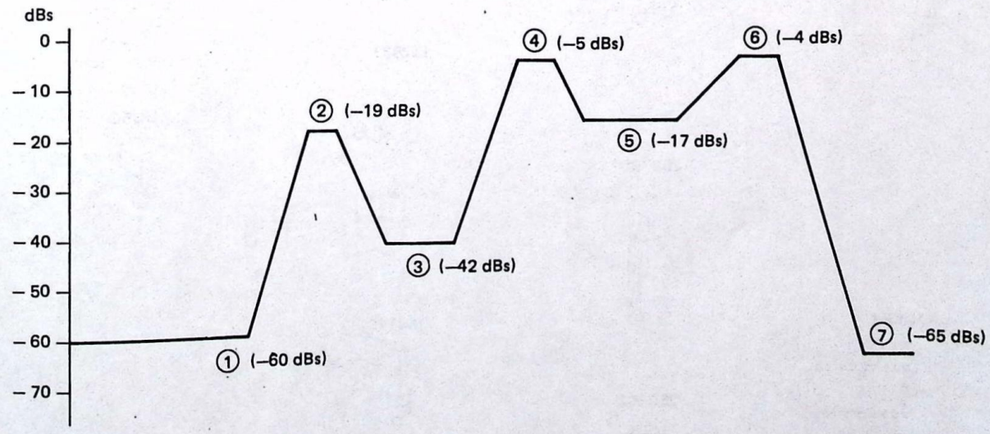

9-6. SEMICONDUCTORS

CX893A
CX897
CX898
CX10044
CX20001
CX20002
CX20004
CX20005
CX20006A
CX20009A
CX20010A
CX20012
CX20038
CX7957
MB3759PF
TC4030BF
TC4051BF
TC4052BF
TC4053BF
TC4066BF
TC4069UBF
μPC324G2
μPC339G2
μPC358G2
μPC393G2
μPC4250G2
μPD652C-35

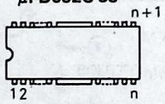

(Top view)

CX20049

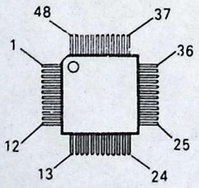

LA7043M

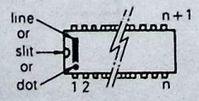

(Top view)

LR3727

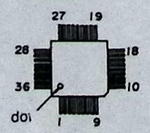

MB8783

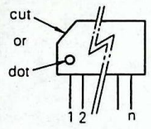

μPD7503G-072

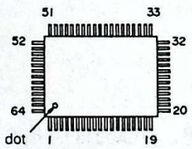

μPD7508G-532

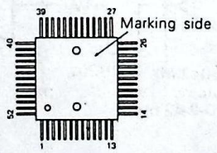

2SA1122
2SA1163
2SC1623
2SC1654
2SC2712



2SB798

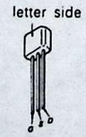

2SB962



2SC536SP



2SD788

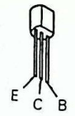

2SD999



2SD1164

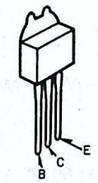

IS2835

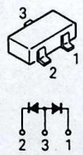

IS2837

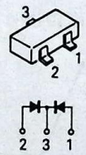

ISS119

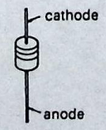

ISS123

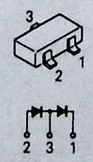

10E2
ERB81-004
ERC81-004
RD7.5EB2
RD9.1EB2
RD13EB2
RD18EB2
RD18EB3

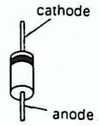

RD3.0MB1
RD4.7MB2
RD5.6MB1
RD6.2MB3
RD6.8MB1
RD8.2MB1
RD9.1MB2
RD9.1MB3
RD10MB3
RD15MB2

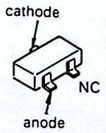

TLG123A
TLO123
TLR123

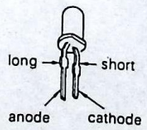

UO5G

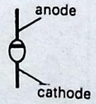

9-7. WAVE FORM

YM-1 Board

Pin No.	REC	PB
⑥	0 V	0 V
⑦	3 V	3 V
⑧	0 V	0 V
⑫	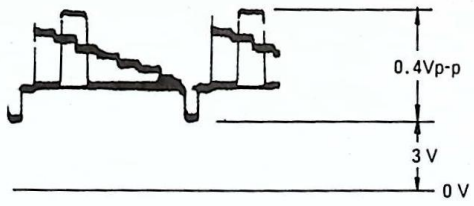	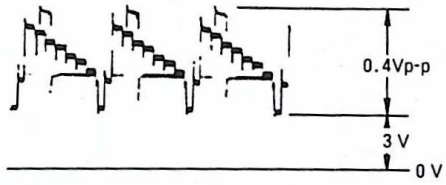
⑬	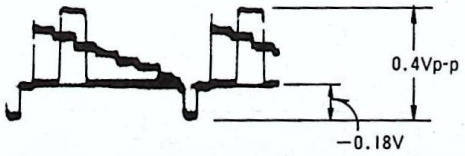	
⑭	3.4V	3.4V
⑮	0 V	0 V
⑰	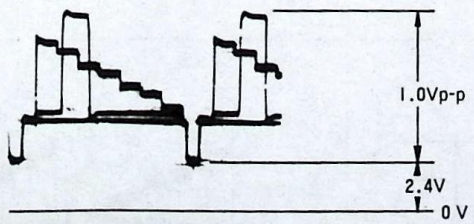	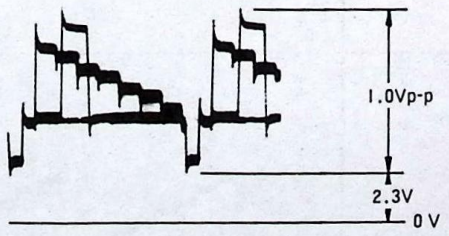
⑱	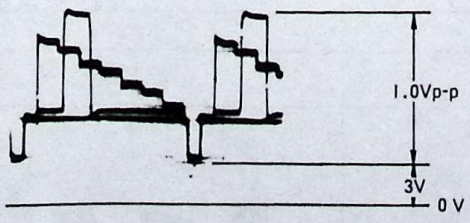	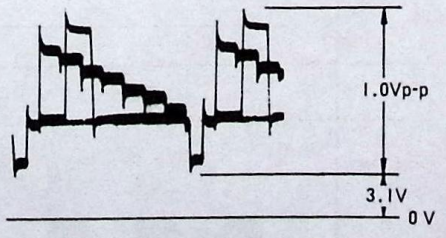

YM-1 Board

Pin No.	REC	PB
⑳	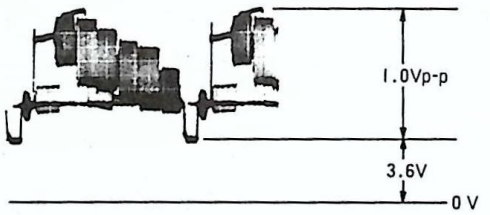	3.6V
㉑	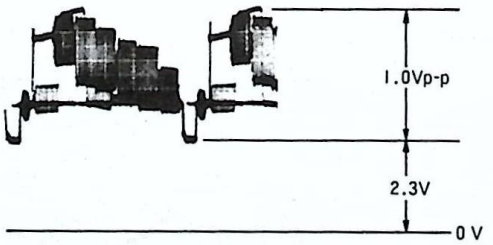	2.4V
㉓	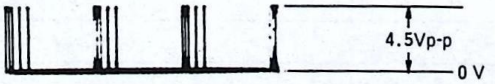	
㉕	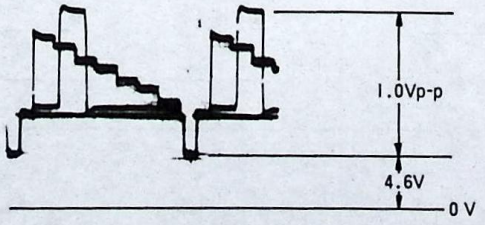	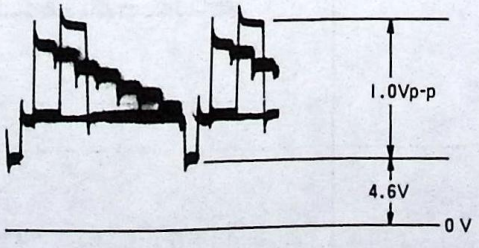
㉖	Color: 3.8 V, B/W: 0 V	3.7V
㉗	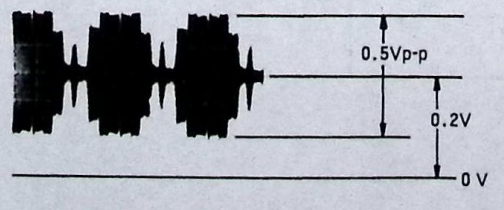	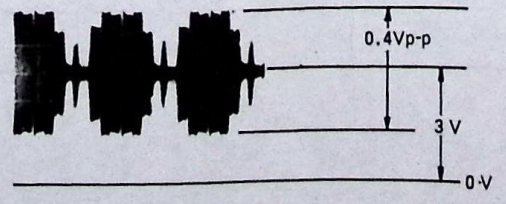

YM-1 Board

Pin No.	REC	PB
㉘	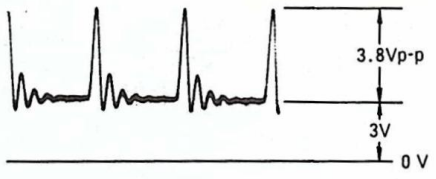	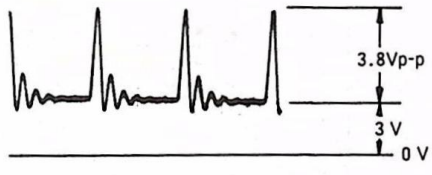
㉙	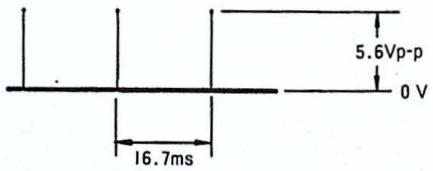	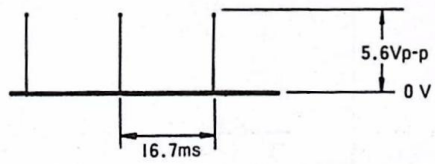
㉚	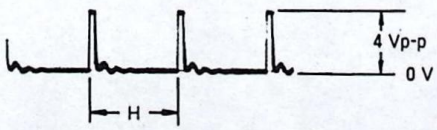 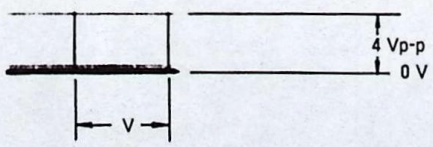	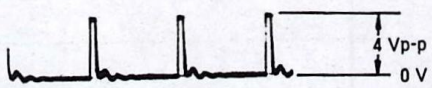
㉛	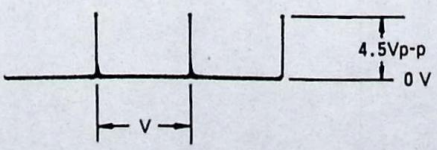	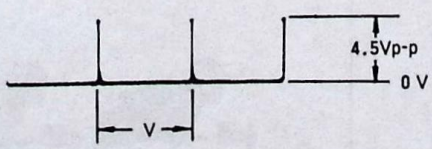
㉜	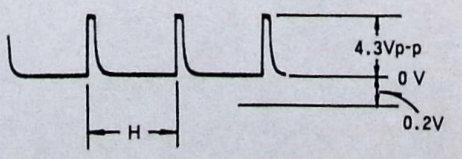	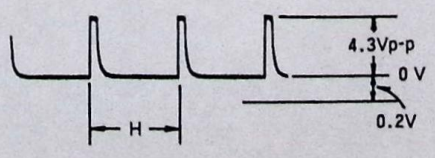

YM-1 Board

Pin No.	REC	PB
㉟	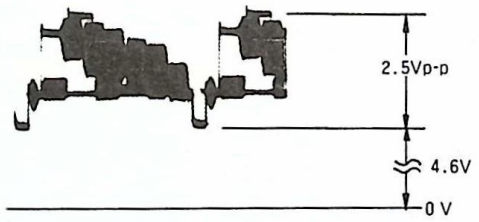	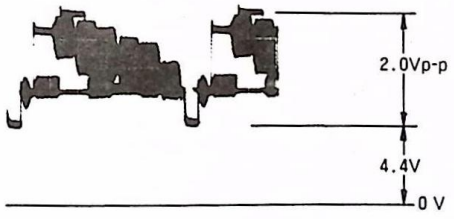
㊱	0.1V	9 V
㊳	6 V	6 V
㊴		
㊵	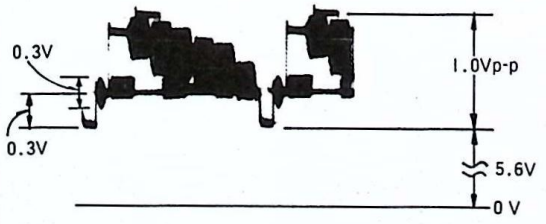	6.1V
㊷	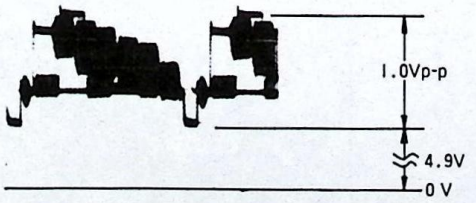	5.4V
㊸	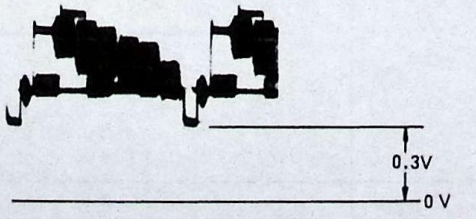	0.65V

JG-1 Board

Pin No.	REC	PB
⑨	0 V	
⑪	0 V	0 V
⑭	0 V	
⑰	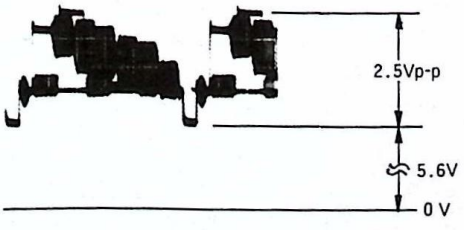	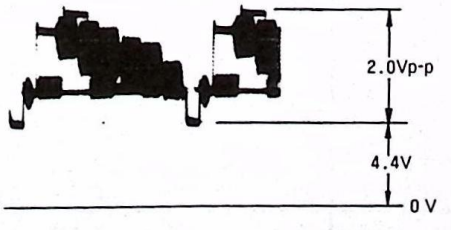
⑱	0 V	0 V
⑳	3.8V	3.5V
㉑	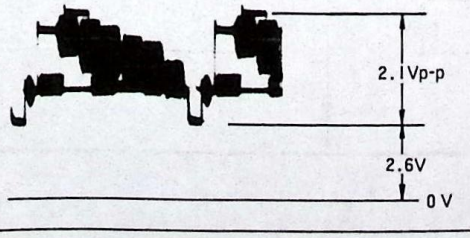	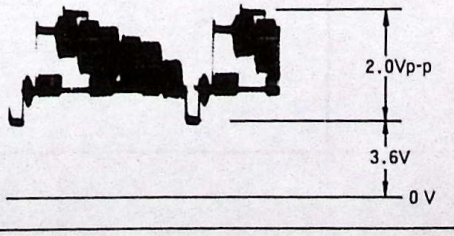
㉒	0 V	2.8V
㉙	0 V	4.9V
㉜	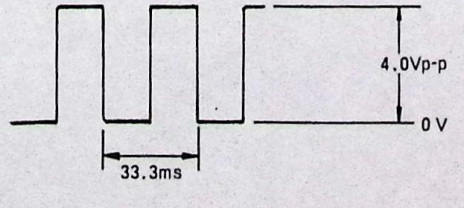	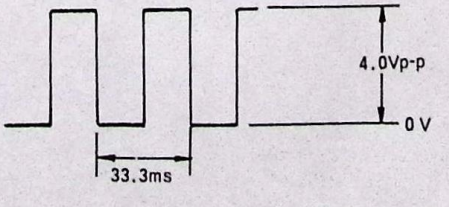

JG-1 Board

Pin No.	REC	PB
㊱		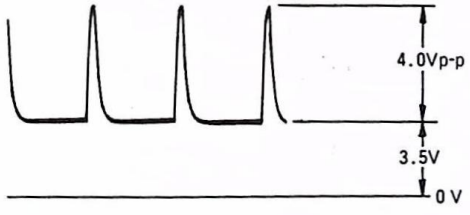
㊳	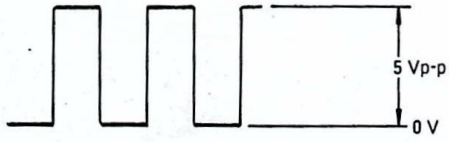	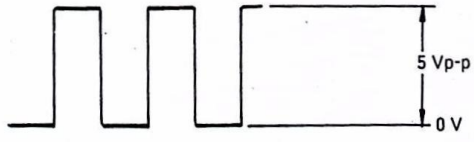
㊴	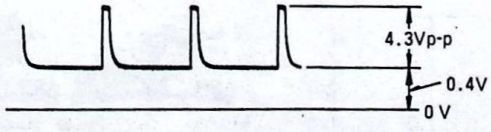	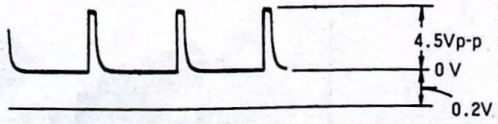
㊷	0.3V	1.3V
㊸	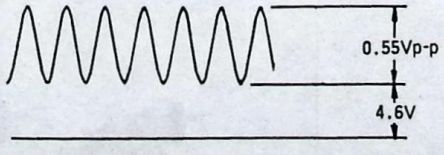	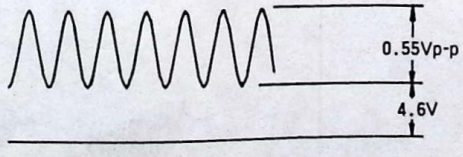

YS-1 Board

Pin No.	REC	PB
④	2 V	2 V
⑤	5.4V	5.5V
⑥	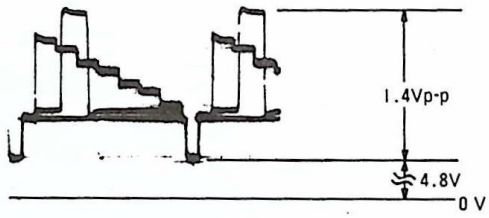	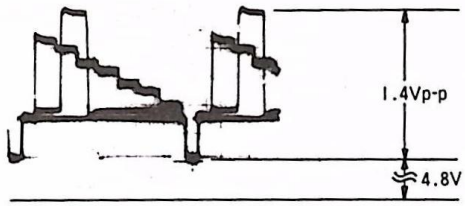
⑧		
⑪	2.7V	2.7V
⑫	2.7V	2.7V
⑭	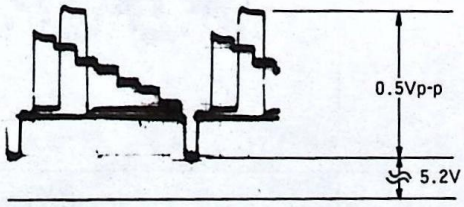	5.5V
⑮	4.8V	4.7V
⑯	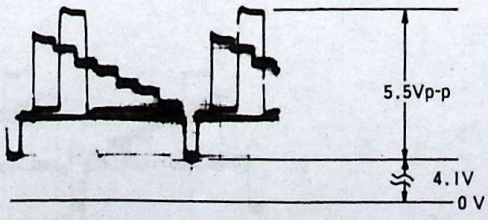	4.2V
⑰	4.1V	4.3V
⑱	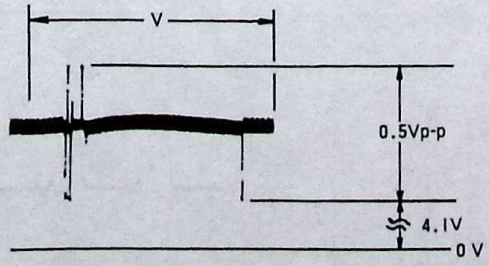	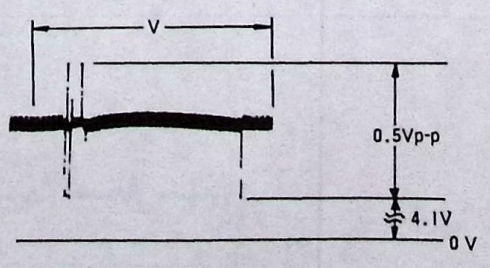

YS-1 Board

Pin No.	REC	PB
⑳	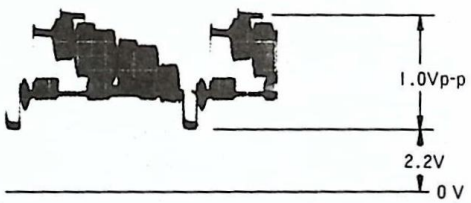	2.4V
㉞		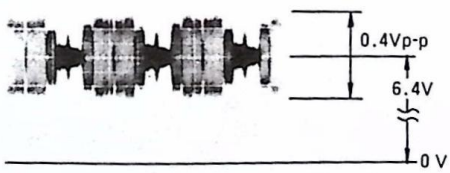
㊱	8.3V	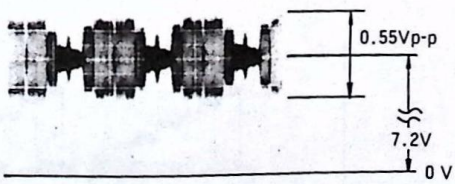
㊴	0 V	0 V
㊶	2.8V	2.9V
㊷	2.8V	2.9V
㊺	0.1V	9 V
㊼	0.1V	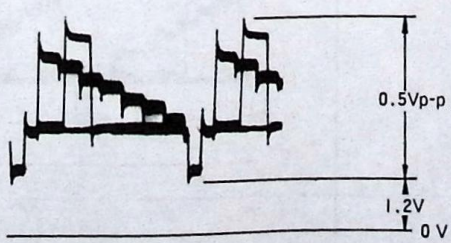
㊾	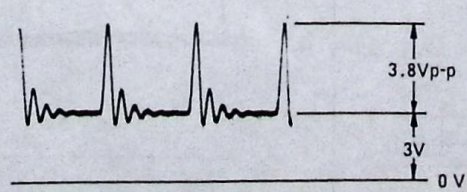	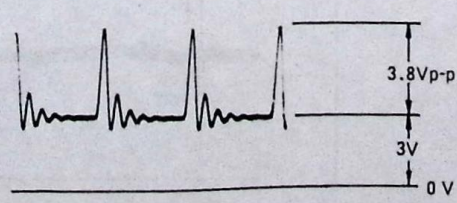

YS-1 Board

Pin No.	REC	PB
⑤①	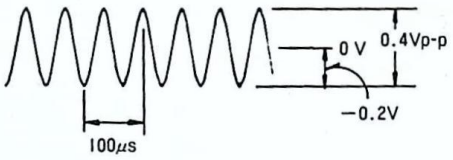	

YF-1 Board

Pin No.	REC	PB
③	8.3V	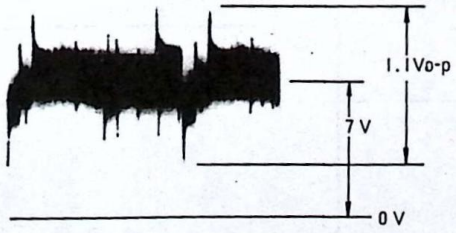
⑥	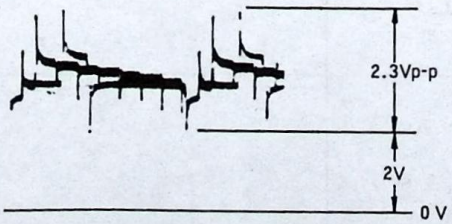	0.9V
⑧	0 V	0 V
⑪	2 V	2.1V
⑬	0.1V	9 V
⑰	0 V	0.4V
㉔	0 V	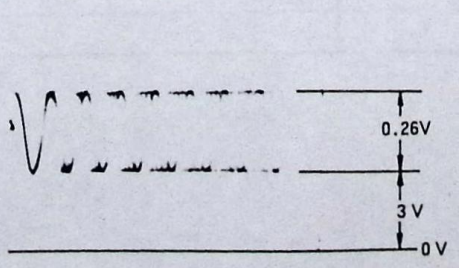

YF-1 Board

Pin No.	REC	PB
㉙	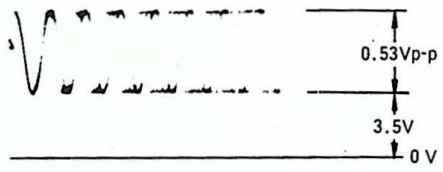	3.6V
㉚	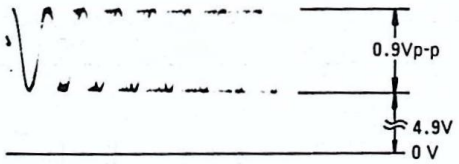	5.6V
㉛	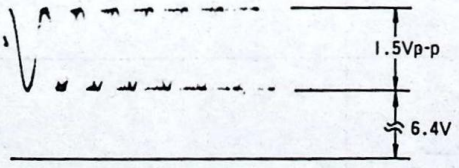	7 V
㉝	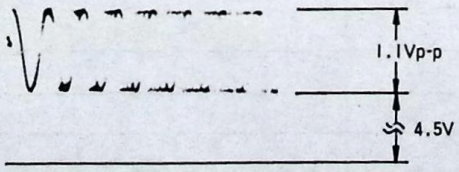	5 V
㉟	0 V	0 V
㊵	0 V	0 V

CM-4 Board

Pin No.	REC	PB
①	0.1 V (touch the prove: voltage drop, the first voltage value: approx 6 V)	5.5V
②	6.9V	5.4V
③	0 V	0 V
⑤	4.9V	0 V
⑥	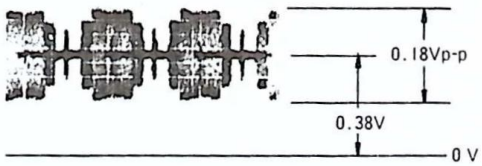	1.2V
⑦	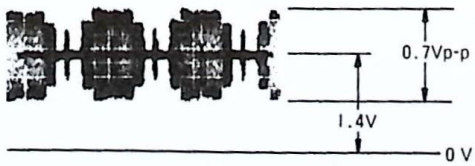	3.8V
⑧	0.1V	0 V
⑨	0 V	0 V
⑩	0 V	0 V
⑪	3.8V	3.7V
⑫	8.3V	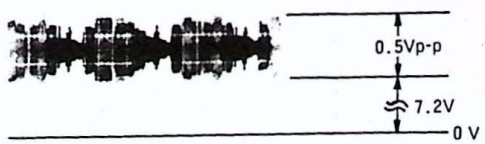
⑮	2.6V	0 V
⑯	2.6V	0 V
⑰	0 V	0 V
⑱	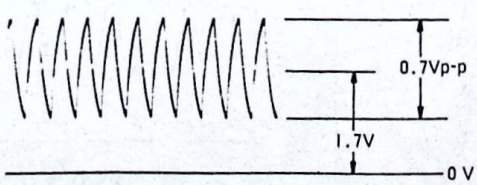	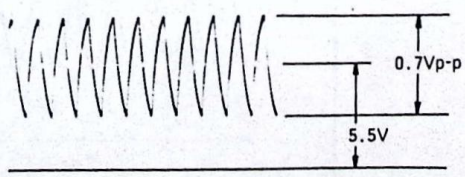

CM-4 Board

Pin No.	REC	PB
㉒	9 V	9 V
㉓	4 V	4 V
㉔	0 V	0 V
㉕		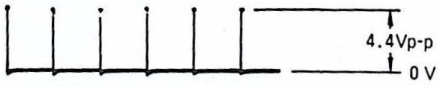
㉖	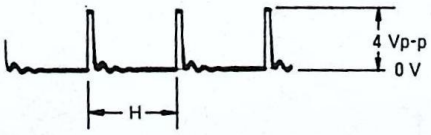 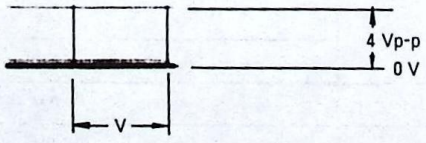	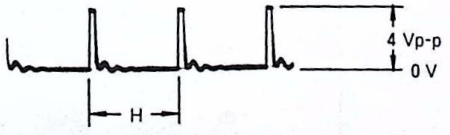 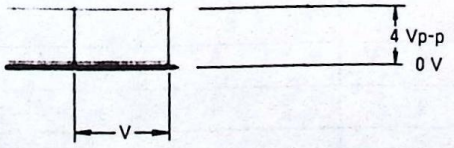
㉗	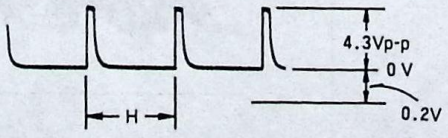	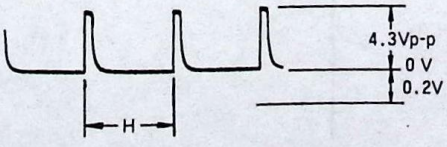
㉘	9 V	9 V
㉙	0 V	0 V
㉚	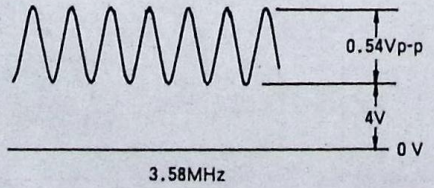	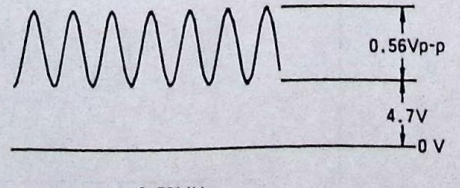

CM-4 Board

Pin No.	REC	PB
㉟	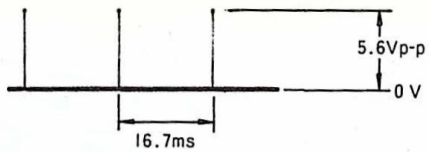	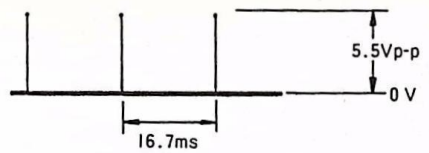
㊱	0 V	0 V
㊲	9 V	9 V
㊳		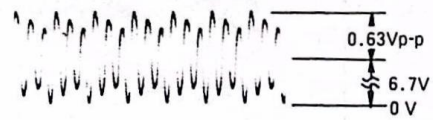
㊴	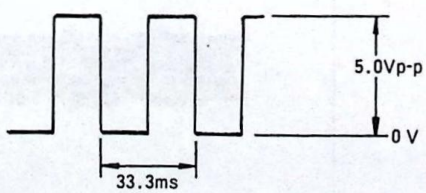	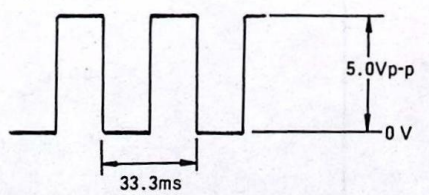
㊵	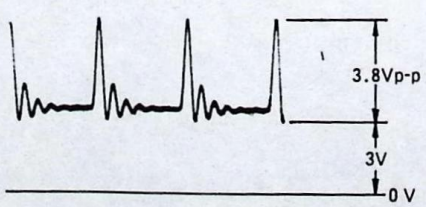	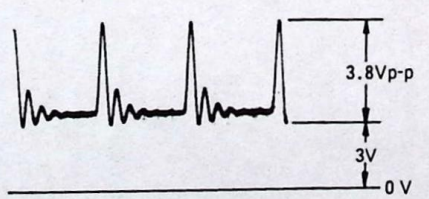
㊶	0 V	3 V
㊷	3.8V	3.8V
㊸	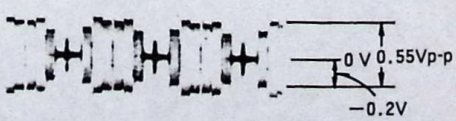	

CM-4 Board

Pin No.	REC	PB
㊾		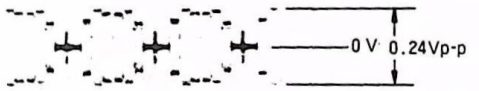
㊶	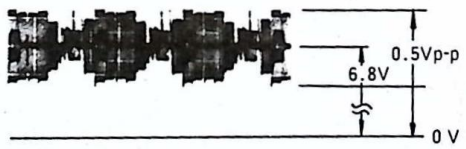	
㊷	0 V	

PE-3 Board

Pin No.	REC	PB
②	0.2V	0.2V
③	0.9V	1.1V
④	2.1V	2.3V
⑥	0.4V	0.43V
⑦	0.6V	0.6V
⑧	1.2V	1.3V
⑩	8.8V	9 V
⑮	6.2V	6.2V
⑯	5.9V	5.9V
⑰	5 V	5.2V
㉕	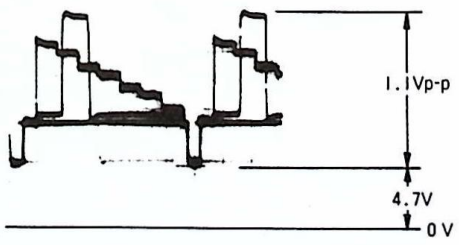	

PE-3 Board

Pin No.	REC	PB
㉗	0.1V	9 V
㉚	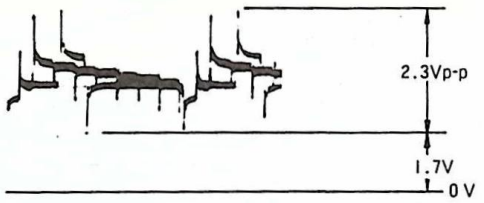	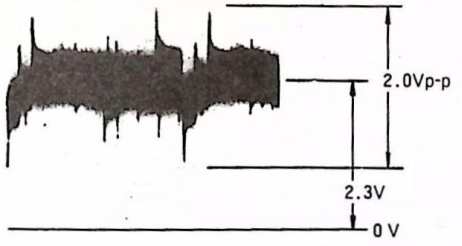
㉛	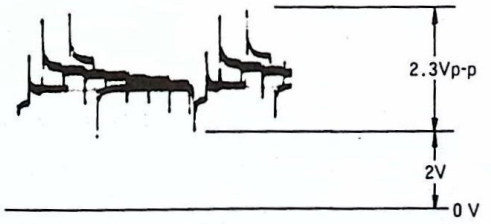	0.9V
㉜		
㉝	2.1V	2.3V

DE-2 Board

Pin No.	REC	PB
②	0 V	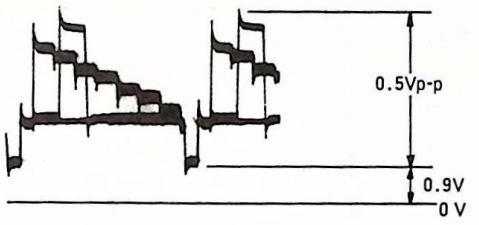
⑩	0.8V	0.8V
⑪	0 V	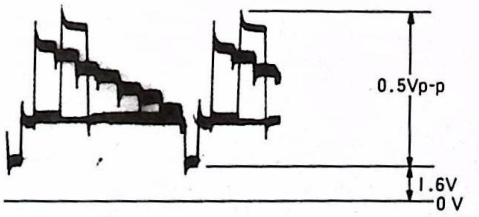
⑫	0 V	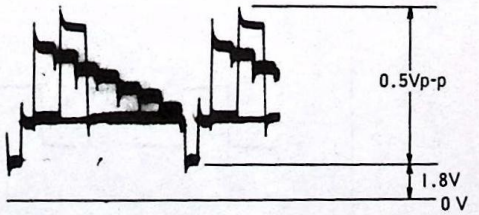
⑬	0 V	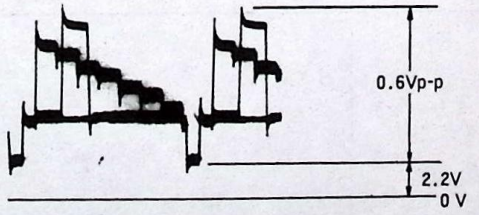
⑰	1.9V	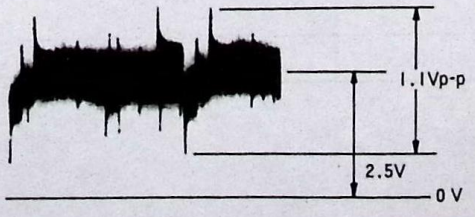
⑲	9 V	9 V
㉑	0.1V	9 V

DE-2 Board

Pin No.	REC	PB
㉔	0.1V	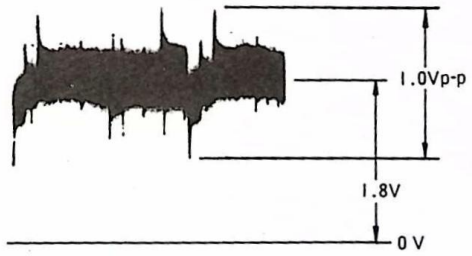
㉕	0 V	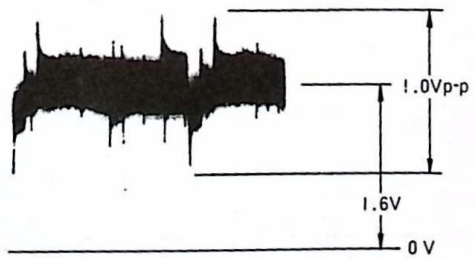
㉛	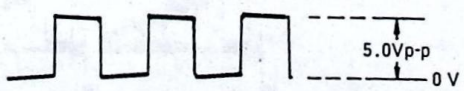	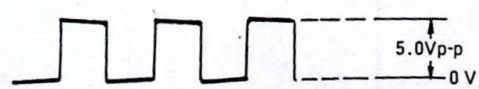
㉝	8.9V	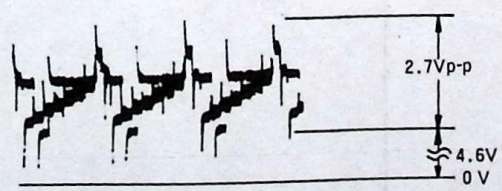
㉟	9 V	9 V

VB-1 Board

Pin No.	REC	PB
⑨	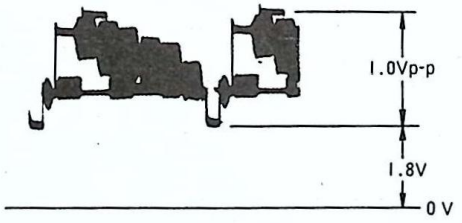	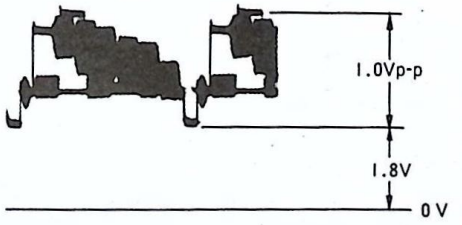
⑩	0.5V	0.5V
⑪	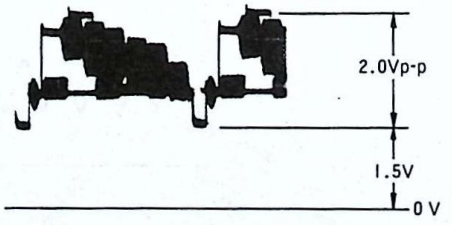	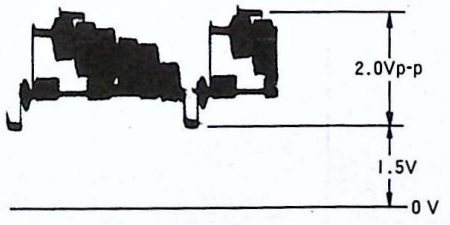
⑰	0 V	4.9V
㉓	0.1 V	9 V
㉚	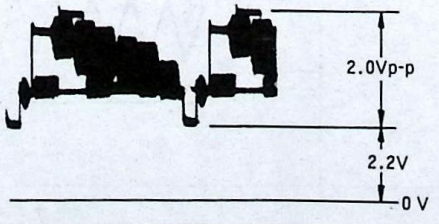	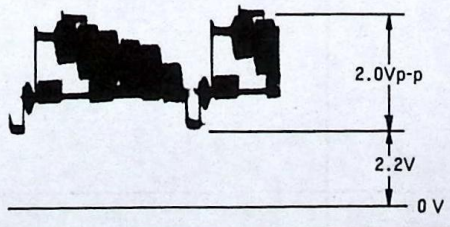
㊶	0 V	0 V
㊸	9 V	9 V

RP-11 Board

Pin No. (CN2)	REC	PB
①	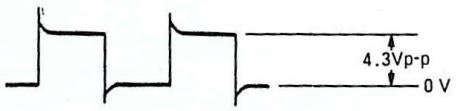	
②	9 V	9 V
③	0.15V	9 V
④	0 V	0 V
⑤	0 V	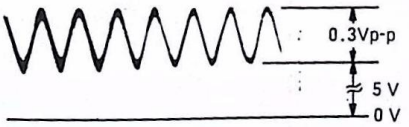
⑥	0 V	0 V
⑦	0 V	0 V
⑧	0 V	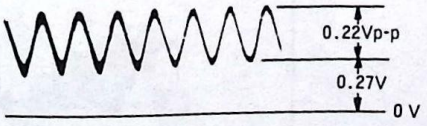
⑨	0 V	0 V
⑩	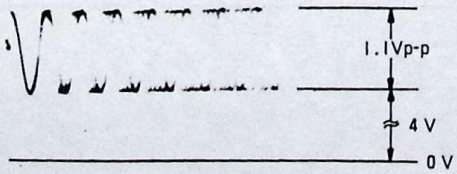	4.5V
⑪		0 V
⑫	4.5V PAUSE : 0 V	0 V

9-8. SCHEMATIC DIAGRAMS AND PRINTED WIRING BOARDS

MA-6 BOARD CONNECTION

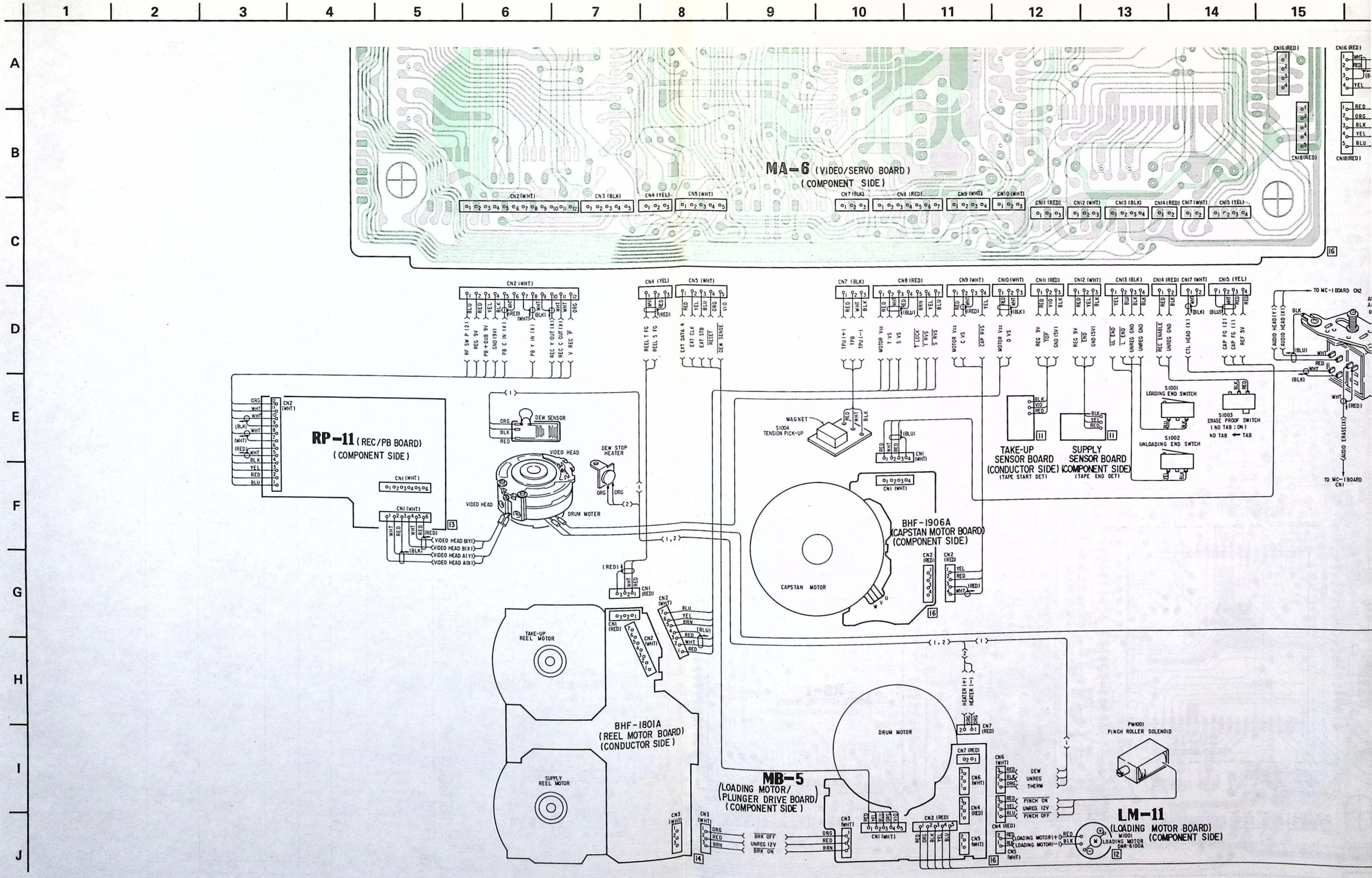

FRAME

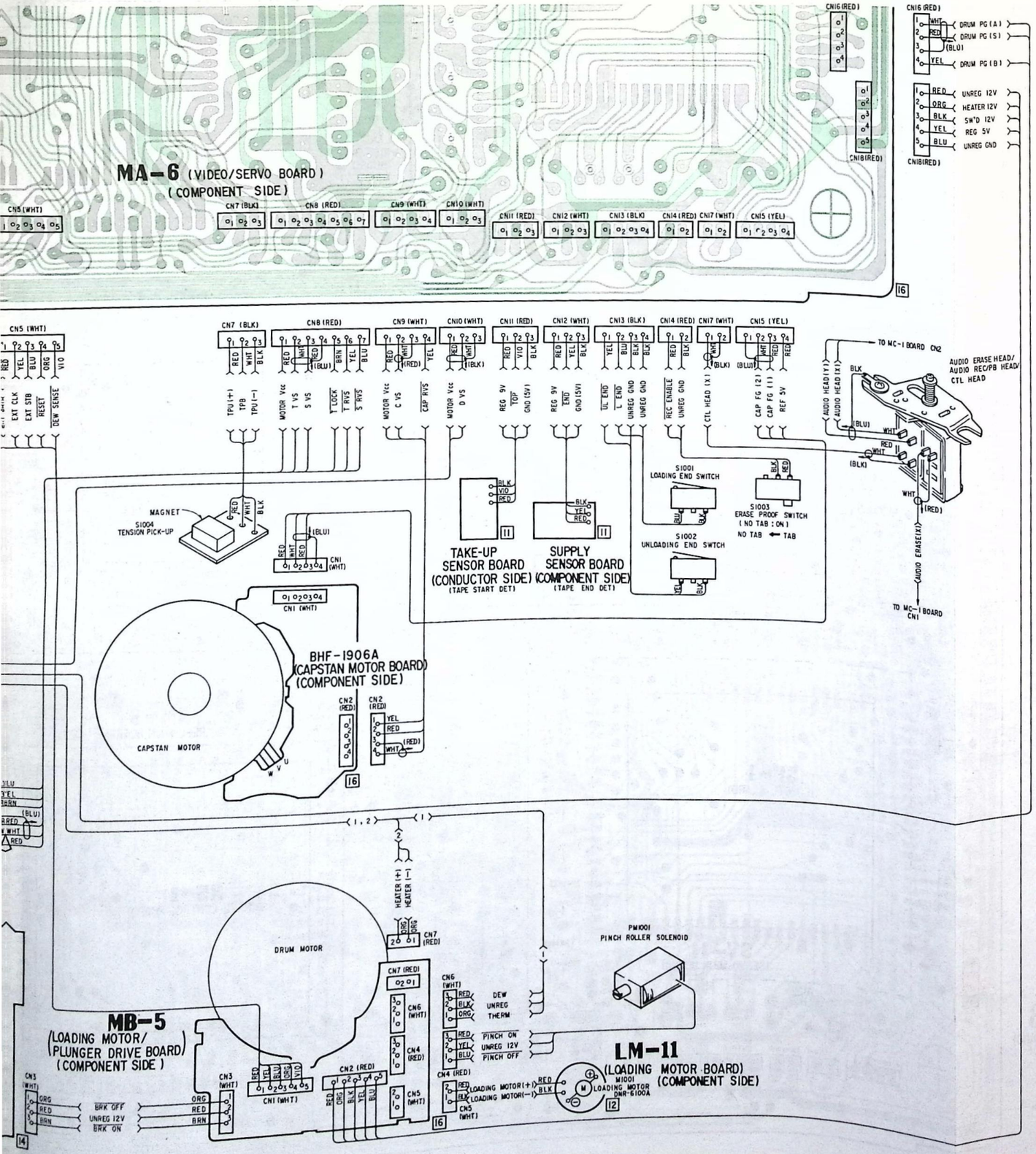

Note:

- Color code of sleeving over the end of the jacket.

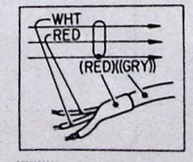

- ▒▒▒: component-side pattern.

MA-6 [VIDEO/SERVO] LU-1

Note:
- ● ⊗ : Through hole.
- ▒▒▒: component-side pattern.
- ▒▒▒: B + pattern

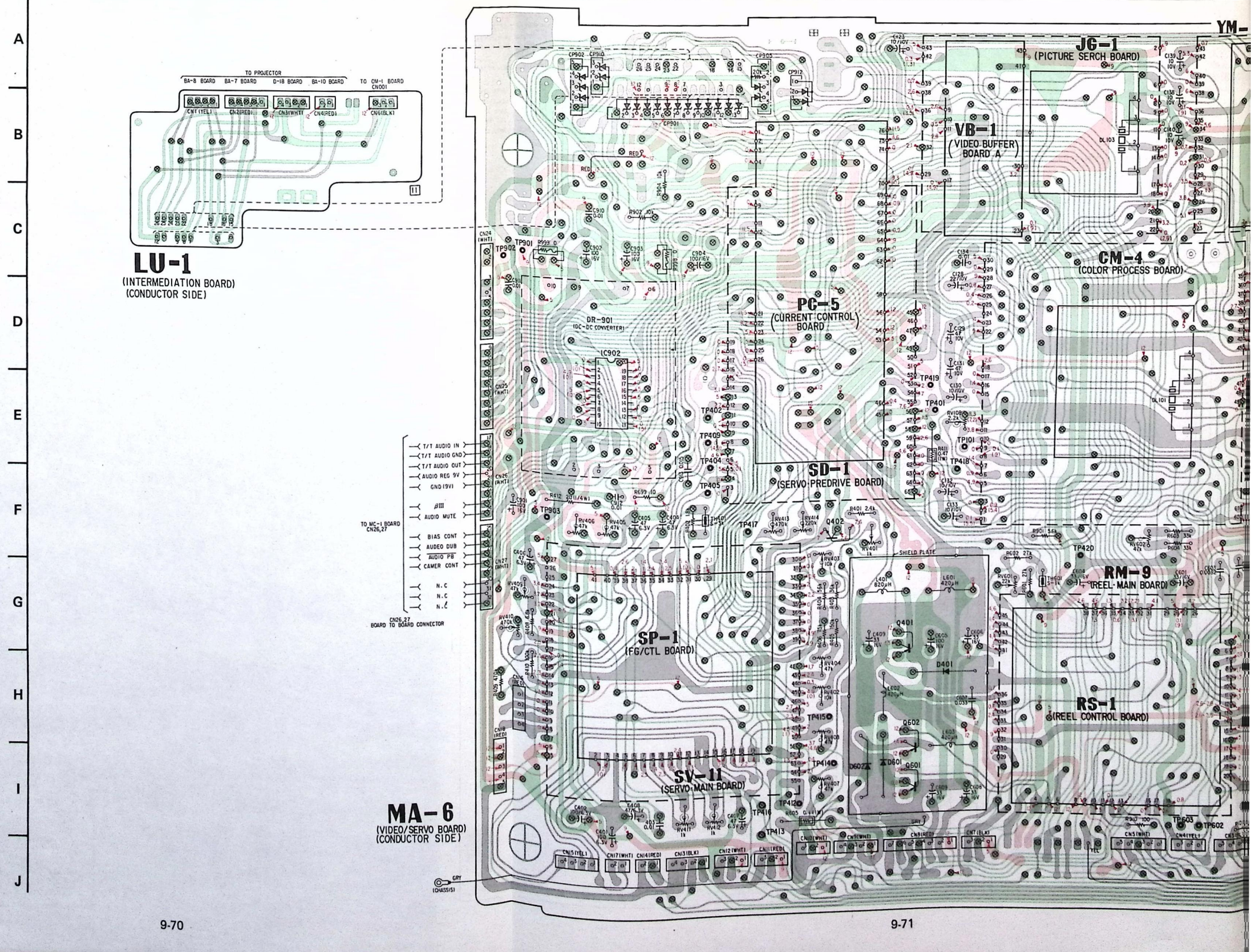

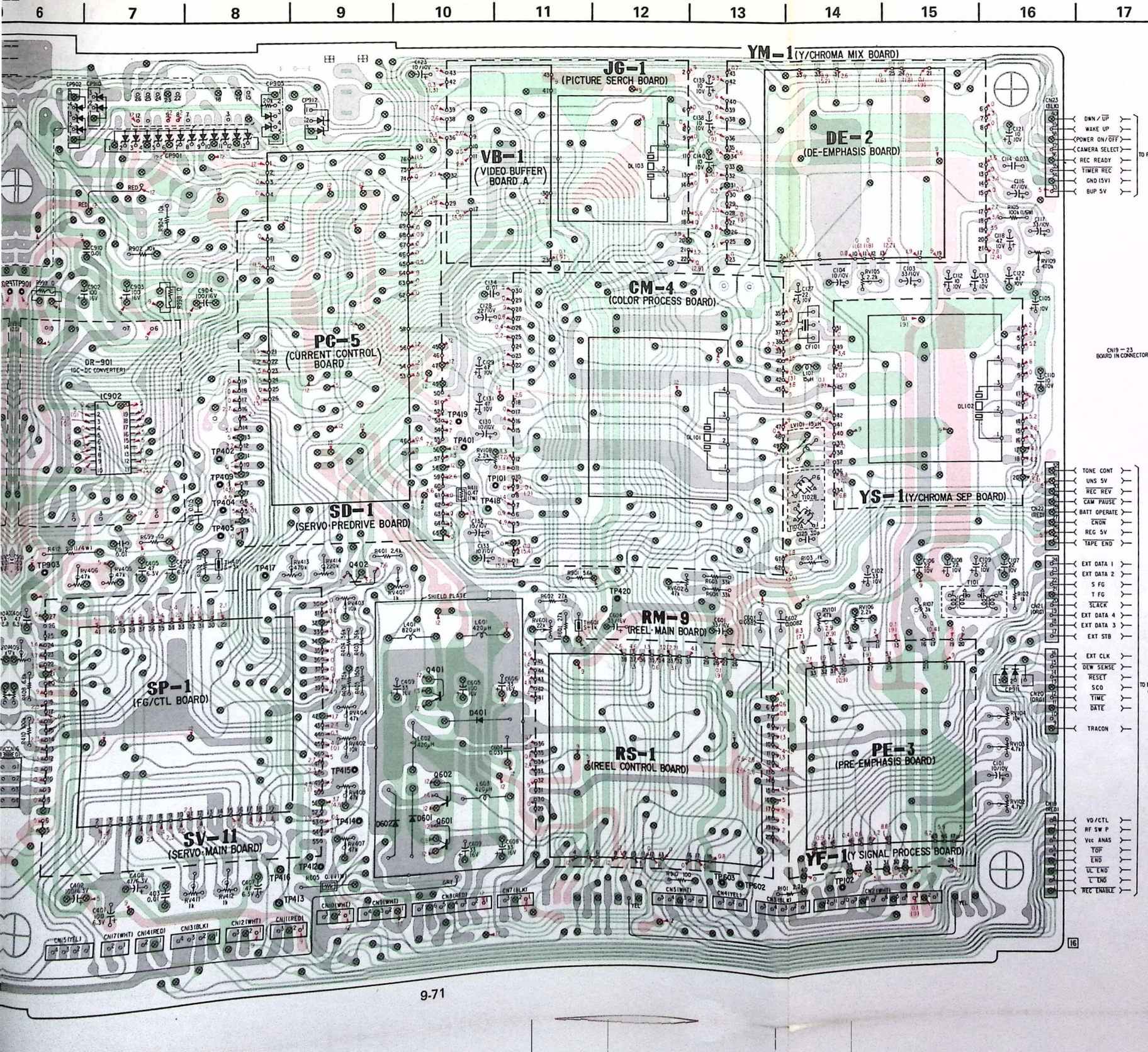

Q , IC	D	ADJ	TP
IC902	402	RV105	901 902
	401	RV108	419 402 401 409 101 404 418 405
	602	RV406,405,413,414 RV401 RV602 RV403 RV101,106 RV601 RV409 RV410 RV404 RV104 RV402 RV103 RV408 RV102 RV407 RV411,412	903 417 420 415 414 416 412 603,602 413 102
	601		

Q , IC | D | ADJ | TP

MA-6 [VIDEO/SERVO] LU-1

1 2 3 4 5 6 7 8 9 10 11 12 13 14 15

A B C D E F G H I J

LU-1 (INTERMEDIATION BOARD)

TO OM-1 BOARD CN001
CN6(BLK)
REMOCON 1
GND 2
MAIN 12V 3

BA-10 BOARD
CN4(RED)
HEATER 12V 1
HEATER 12V 2

D-18 BOARD
CN3(WHT)
GND 1
GND 2
MAIN 12V 3
MAIN 12V 4

TO PROJECTOR
BA-7 BOARD
CN2(RED)
PB+DUB 1
GND 2
AUDIO IN 3
GND 4
VIDEO IN 5

BA 8 BOARD
CN11(YEL)
GND 1
AUDIO OUT 2
GND 3
VIDEO OUT 4

CP901 RD3EB ×8

CP910 RD7.5EB ×2
CP905 RD9.1EB ×2
CP912 RD9.1EB ×2
CP902 RD9.1EB ×2
RD13EB

R902 10k
R904 10k
CP905 20k
CP910 CP912 CP902

TO MC-1 BOARD CN26,27

CN26,27 BOARD TO BOARD CONNECTOR

CN26 (WHT1): 17 T/T AUDIO IN; 18 T/T AUDIO GND; 19 T/T AUDIO OUT; 20 AUDIO GND 9V; 21 GND (9V); 22 ∮ H; 23 AUDIO MUTE; 24

CN27 (WHT1): 25 BIAS CONT; 26 AUDIO DUB; 27 AUDIO PB; 28 CAMERA CONT; 29 N.C; 30 N.C; 31 N.C; 32

DR-901 (DC-DC CONVERTER): POWER ON; 12V IN; IN GND; 5V; 9V; 9V GND; 5V GND; 5V CONT
R999 0
R998 0
C902 100/16V
C903 100/16V
C904 100/16V
C909 0.01
C910 0.01
C911 0.01
TP902 5V
TP901 9V
TP903 GND

IC902 MB8783 SERIAL/PARALLEL
GND; MC; O REC; A MUTE; BIAS CONT; AUDIO DUB; V REC FM; AUDIO PB; CAME CONT
PB+DUB; V MUTE; SET; RESET; EXT STB; EXT DATA I; EXT CLK; Vdd
C912 0.01
C913 0.015
R901 5.6k

PC-5 CURRENT CONTROL BOARD
MAIN 12V; UNS 12V; POWER SW; WAKE UP; PB+DUB
BUP 5V; UNS 5V; PB+DUB
CN ON A; T/T BUF ON; POWER ON OFF; UNREG GND; UNREG 12V; SWD 12V; REG 5V; CN ON; BATT OP

TP102 REC Y CURR ADJ
RV106 22k
REC Y FM LEVEL
DL101
L101 15μH
L(V)101 15μH

YF-1 (Y SIGNAL PROCESS)
MC IN; O REC IN; REC Y OUTPUT; REC Y FM LEVEL; FM WAVE

YS-1 (Y/CHROMA SEP BOARD)
10.7MHz IN; BURST FLAG IN; PB Y IN; PB SYNC IN; PB DUB IN; DL OUT GND; DL OUT; REG 9V IN; DL IN; DL GND; DL 9V IN; GND(9V); P.B.C 3.58MHz O/P; REC Y IN; REC C IN; REC Y OUT; REC C OUT; 3.58MHz OUT; COMP VIDEO IN; REC SYNC IN; REC SYNC OUT; REC Y OUT; REC C OUT; CORRELSIGOUT; CORRELSIGIN; DL OUT GND; DL IN GND; REG 9V IN; DL 9V IN; GND(9V); REC 9V IN; REC Y FM IN; REC C IN; REC Y OUT; REC C OUT; P.B.C 3.58MHz OUT; 3.58MHz VCO ERR(2); 3.58MHz VCO ERR(1); PCM IN; 3.58MHz VCO; P.B.C 3.58MHz IN; REC C IN; REC Y OUT; REC C OUT; REF 3.58MHz OUT; COMP SYNC IN; HD IN; VD IN; KILLER OUT; ACK OUT; 5KE W IN; BURST FLAG IN; RF SW P(1) IN; 10.7MHz OUT; REG 9V IN; GND(9V); PBC IN; REC C 3.58MHz OUT; PBC 3.58MHz IN
C106 10/10V
C108 22/10V
R102
C107 22/10V
C110 10/10V
T101
HALF H SHIFT
RV101 47k
RF SW P(1) IN; REC Y OUT; REC Y IN; PB+DUB 9V IN; REC 9V IN; GND (9V); REG 9V IN
PE-3 (PRE-EMPHASIS BOARD)
DARK CLIP; WHITE CLIP; CARRIER SET
RV104 10k; RV103 4.7k; RV102 4.7k
DARK CLIP; WHITE CLIP; C(I) 10/10V; CARRIER
T102A; T102B
C125 30p
R103 1k
CF101 10.7MHz
C127 22/10V
C133 10/10V
C132 10/10V
RV105 2.2k
REC C CURR
C131 10/10V
C130 10/10V
C129 0.01
C128 22/10V
C134 0.01
TP101 REC C WRR ADJ

CM-4 (COLOR PROCESS) BOARD

GND 5V; UNREG 12V; REG 5V; UNREG GND
<4,19,23–25>; <11–16, 21, 22>; <4,19,23–26>

MA-6 (VIDEO/SERVO BOARD)

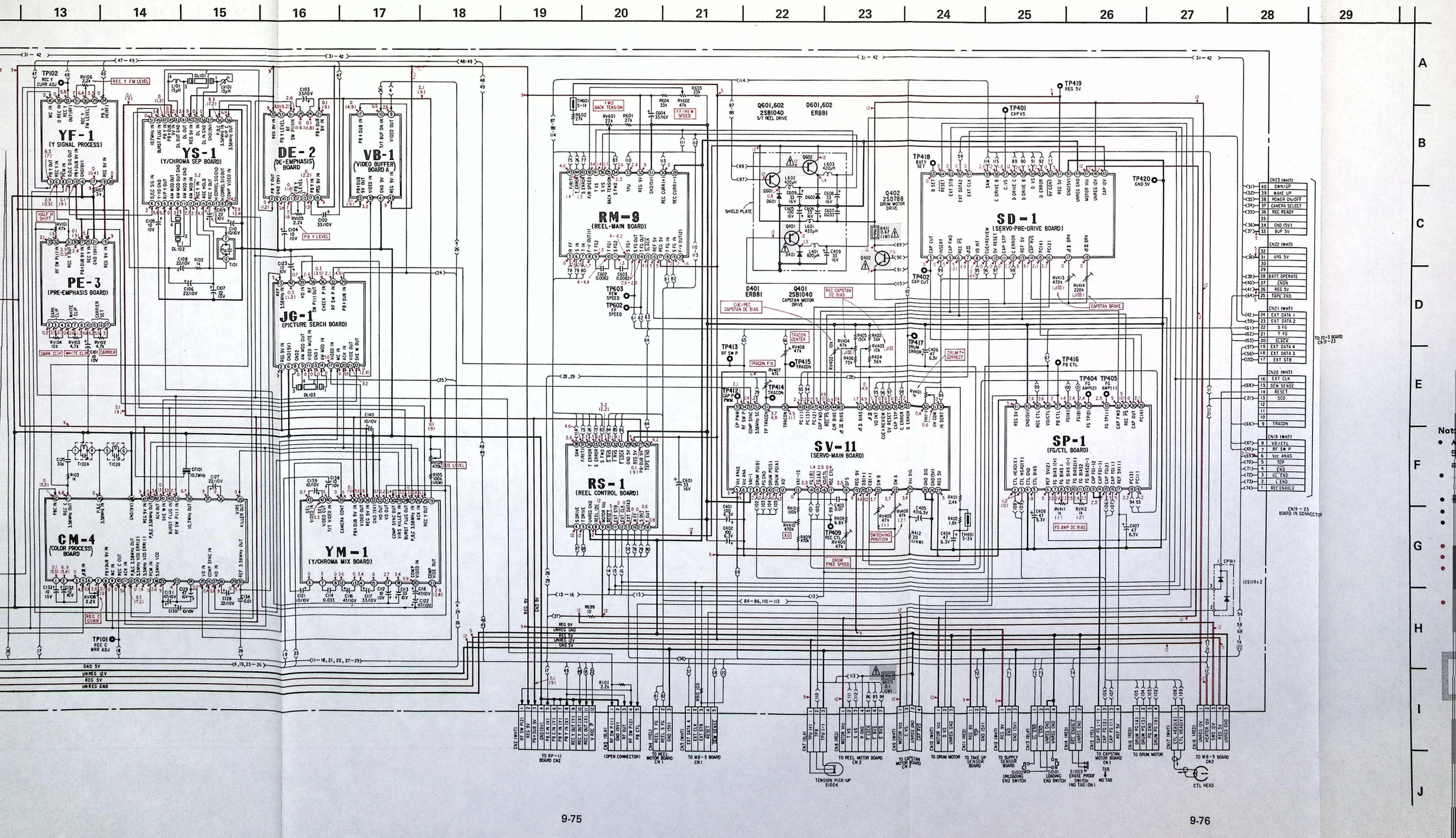
YF-1
(Y SIGNAL PROCESS)
YS-1
(Y/CHROMA SEP BOARD)
DE-2
(DE-EMPHASIS BOARD)
VB-1
(VIDEO BUFFER BOARD A)
PE-3
(PRE-EMPHASIS BOARD)
JG-1
(PICTURE SERCH BOARD)
CM-4
(COLOR PROCESS BOARD)
YM-1
(Y/CHROMA MIX BOARD)
RM-9
(REEL·MAIN BOARD)
RS-1
(REEL CONTROL BOARD)
SD-1
(SERVO-PRE-DRIVE BOARD)
SV-11
(SERVO-MAIN BOARD)
SP-1
(FG/CTL BOARD)
Q601,602
2SB1040
S/T REEL DRIVE
D601,602
ERB81
Q402
2SD788
DRUM MOTOR DRIVE
D401
ERB81
Q401
2SB1040
CAPSTAN MOTOR DRIVE
TENSION PICK-UP
S1004
CTL HEAD

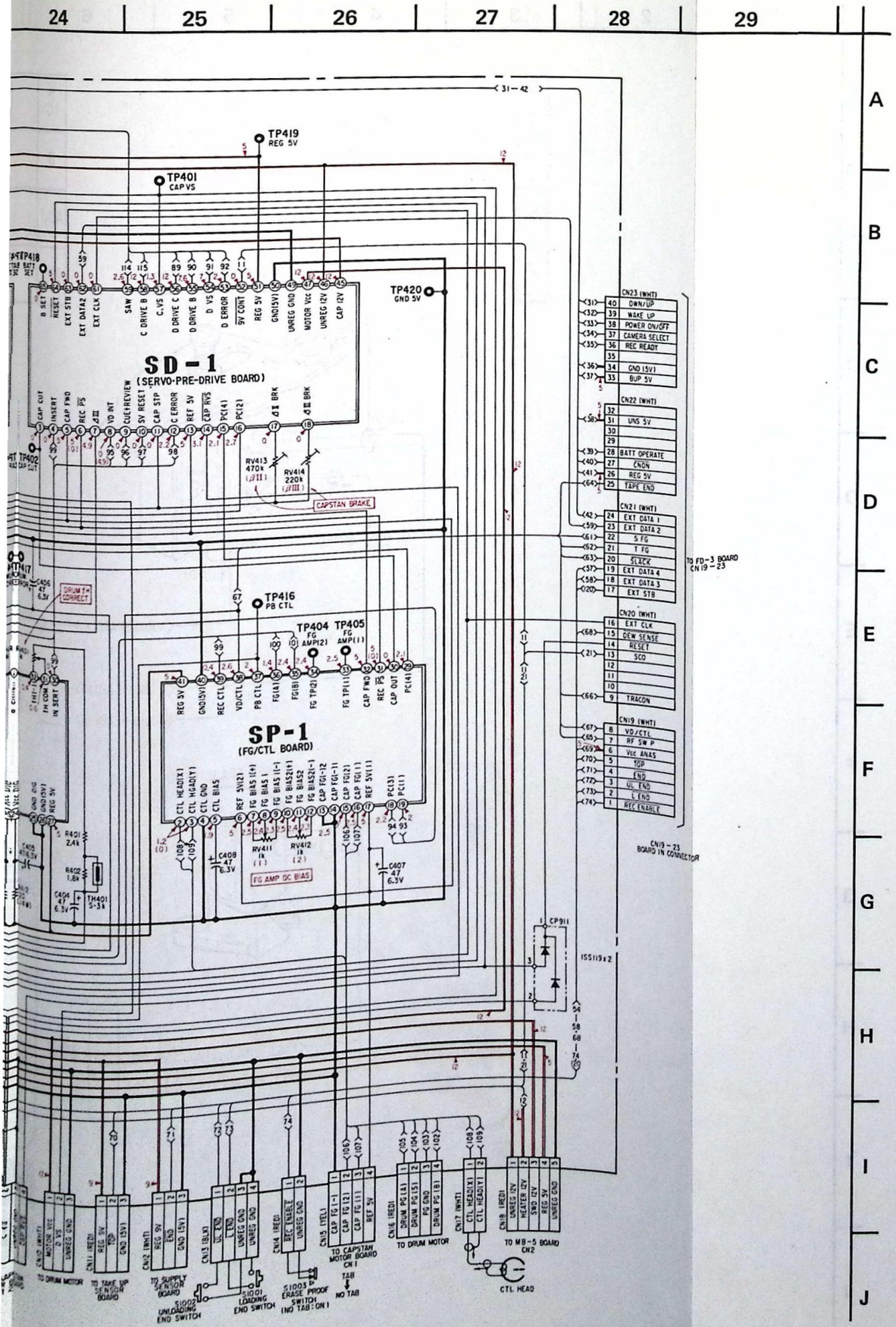

Note:

- All capacitors are in μF unless otherwise noted. pF: μμF 50WV or less are not indicated except for electrolytics and tantalums.
- All resistors are in ohms, 1/6 W unless otherwise noted. kΩ: 1000 Ω, MΩ: 1000 kΩ
- : fusible resistor.
- : panel designation.
- All variable and semi-fixed resistors have characteristic curve B, unless otherwise noted.
- : adjustment for repair.
- : B+ bus.
- The voltage value is a reference value between the grounding when the color bar signal is received from a color bar generator.
- The voltage value is measured using a digital tester (10 MΩ).

  no mark: βIII REC mode

  ( ) : βIII PB mode

Note: The components identified by shading and mark ⚠ are critical for safety. Replace only with part number specified.

AUDIO·VIDEO AUDIO·VIDEO

MC-1 [AUDIO/VIDEO]

Note:

- Color code of sleeving over the end of the jacket.

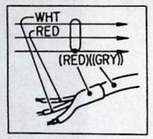

- ⊗ : Through hole.
- : component-side pattern.
- : B + pattern

	1	2	3	4	5	6	7	8	9	10	11	12	13	14
A														
B														
C														
D														
E														
F														
G														
H														
I														
J														

Q IC								306	305	304 303				302	301	307
D																
ADJ												RV302				RV301
TP								310 309			308	302 306 305	303 304		301	

AUDIO ERASE HEAD/
AUDIO REC/PB HEAD/
CTL HEAD

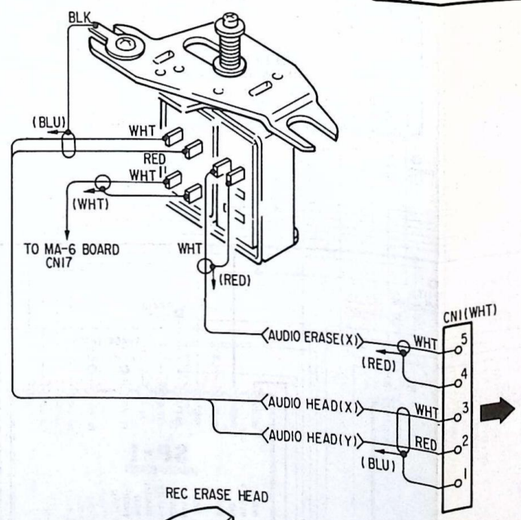

REC ERASE HEAD

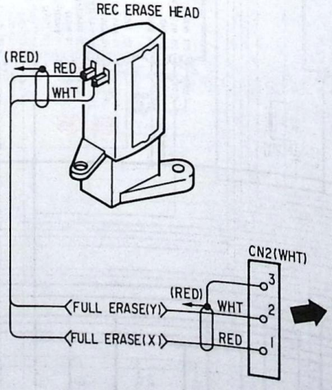

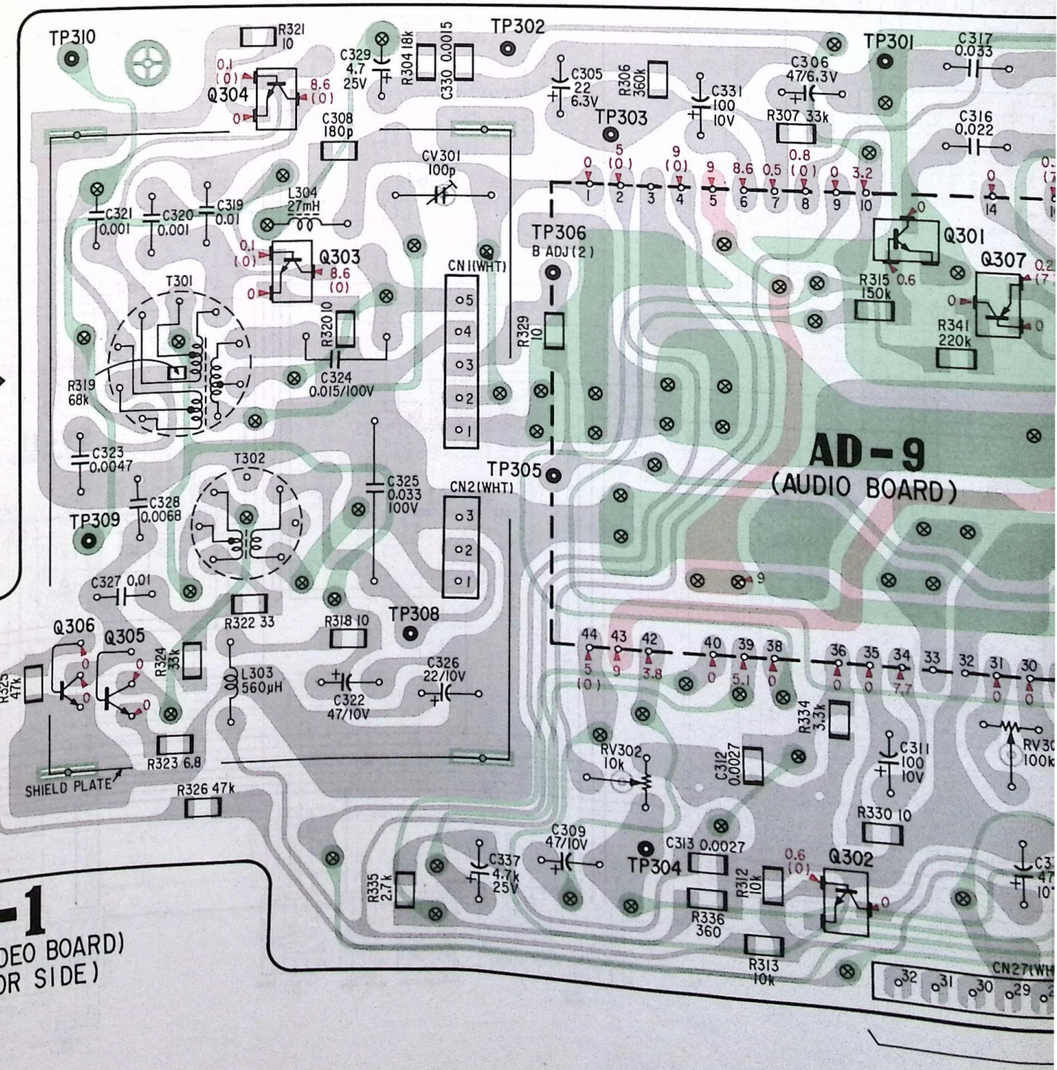

MC-1
(AUDIO/VIDEO BOARD)
(CONDUCTOR SIDE)

13 14 15 16 17 18 19 20 21 22 23 24 25 26 27 28 29

A B C D E F G H I

Q IC	
D	
ADJ	RV301 RV303
TP	301

301 307 302

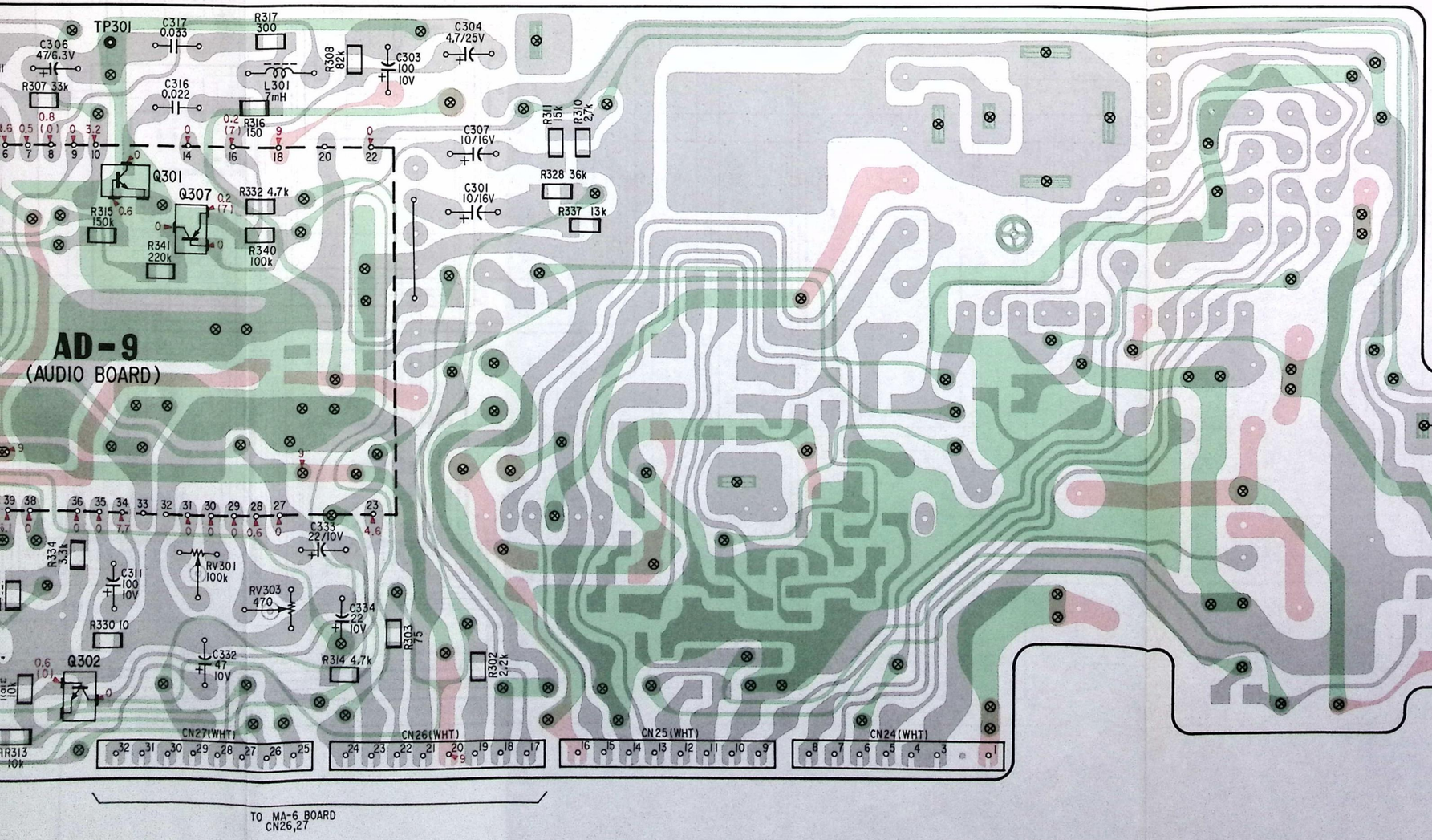

MC-1 [AUDIO/VIDEO]

MC-1 (AUDIO/VIDEO BOARD)

CN26(WHT)
- 17 T/T AUDIO IN
- 18 T/T AUDIO GND
- 19 T/T AUDIO OUT
- 20 AUDIO REG 9V
- 21 GND (9V)
- 22
- 23 βIII
- 24 AUDIO MUTE

TO MA-6 BOARD CN26,27

CN27(WHT)
- 25 BIAS CONT
- 26 AUDIO DUB
- 27 AUDIO PB
- 28
- 29 TONE CONT
- 30 N.C
- 31 N.C
- 32 N.C

R302 2.2k · R314 4.7k · R332 4.7k

Q307 2SA812 TONE CTL SWITCH

Q301 2SC1623 βII/βIII SELECT(REC)

R315 150k · C316 0.022 · TP301

R341 220k · Q307 · R340 100k · C303 100 10V · R308 82k · C304 4.7 25V · TP302 · R316 150 · C317 0.033 · C305 22 6.3V · R317 300 · R306 360k · C331 100 10V · C306 47 6.3V · R307 33k · L301 7mH · TP303

MIC AMP IN · GND (2) · REG 9V TIME CONST · PB 9V TIME CONST · AUDIO MUTE IN · REC AMP OUT · REC AMP IN · REC EQ · AGC TIME CONST · RIPPLE FILTER · REG 9V IN · BIAS CONT OUT · GND (1) · BIAS CONT IN · R/P HEAD SELECT

AD-9 (AUDIO BOARD)

βIII · HEAD TUNING · EQ AMP IN · PB LEVEL ADJ.VR · EQ ADJ.VR(1) · EQ ADJ.VR(2) · GND(3) · LINE AMP GND · RIPPLE FILTER (1) · RIPPLE FILTER (2) · MIC EQ AMP OUT · TONE CONT · LINE AMP IN · MUTE TRANSIENT · LINE AMP OUT · AUDIO PB IN

C334 22 10V · R313 10k · C332 47 10V · R312 10k · Q302 · C333 22 10V · RV303 470 · RV301 100k EQ · C311 100 10V · R330 10 · R334 3.3k · C312 0.0027 · C337 4.7 25V · R335 2.7k · C313 0.0027 · R336 360 · C309 47 10V · RV302 10k · REC AMP INPUT LEVEL · PB LEVEL · TP304

R328 36k · R311 15k · C307 10/16V · C301 10/16V · R310 2.7k · R337 13k · Q302 2SC1623 REC/PB HEAD SELECT

PB/REC LEVEL

C330 0.0015 · R304 18k · C329 4.7 25V · C308 180p · L304 27μH · R329 10 · TP305 · CV301 100p · T301 · TP306 B ADJ(2) · C324 0.015 100V · R319 68k · C319 0.01 · R320 10 · R321 10 · Q303 · Q304 · C320 0.001 · C321 0.001 · TP310 · C323 0.0047 · TP309 · R318 10 · L303 560μH · Q303,304 2SI623 BIAS OSC

AUDIO REC/PB HEAD · AUDIO ERASE HEAD · CN1 (WHT)
- 1 AUDIO HEAD (G)
- 2 AUDIO HEAD (Y)
- 3 AUDIO HEAD (X)
- 4 AUDIO ERASE (Y)
- 5 AUDIO ERASE (X)

REC ERASE HEAD · CN 2 (WHT)
- 1 FULL ERASE (X)
- 2 FULL ERASE (Y)
- 3 FULL ERASE (G)

T302 · C325 0.033 100V · TP308 · Q305 · Q306 · R322 33 · C327 0.01 · R324 33k · R326 47k · C326 22 10V · R323 6.8 · C328 0.0068 · R325 47k · C322 47 10V

Q305 2SC536 BIAS OSC · Q306 2SC536 OSC CONTROL · SHIELD PLATE

Note:
- All capacitors are in μF unless 50WV or less are not indicated and tantalums.
- All resistors are in ohms, 1/10 W kΩ: 1000 Ω, MΩ: 1000 kΩ
- All variable and semi-fixed r curve B, unless otherwise note

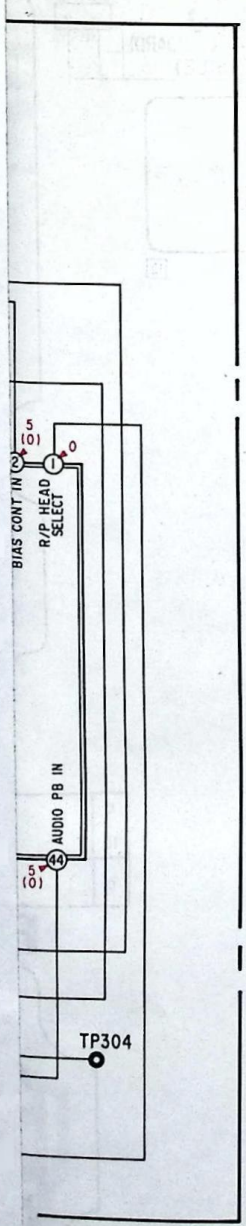

Note:

- All capacitors are in μF unless otherwise noted. pF: μμF 50WV or less are not indicated except for electrolytics and tantalums.
- All resistors are in ohms, 1/10 W unless otherwise noted. kΩ: 1000 Ω, MΩ: 1000 kΩ
- All variable and semi-fixed resistors have characteristic curve B, unless otherwise noted.

- ▭ : adjustment for repair.
- ▬ : B+ bus.
- The voltage value is a reference value between the grounding when the color bar signal is received from a color bar generator.
- The voltage value is measured using a digital tester (10 MΩ).
  no mark: βIII REC mode
  ( ) : βIII PB mode

SYSTEM CONTROL INDICATOR

TS-43 FD-3 [SYSTEM CONTROL/INDICATOR]

Note:
- ⊗ : Through hole.
- : component-side pattern.
- : B + pattern

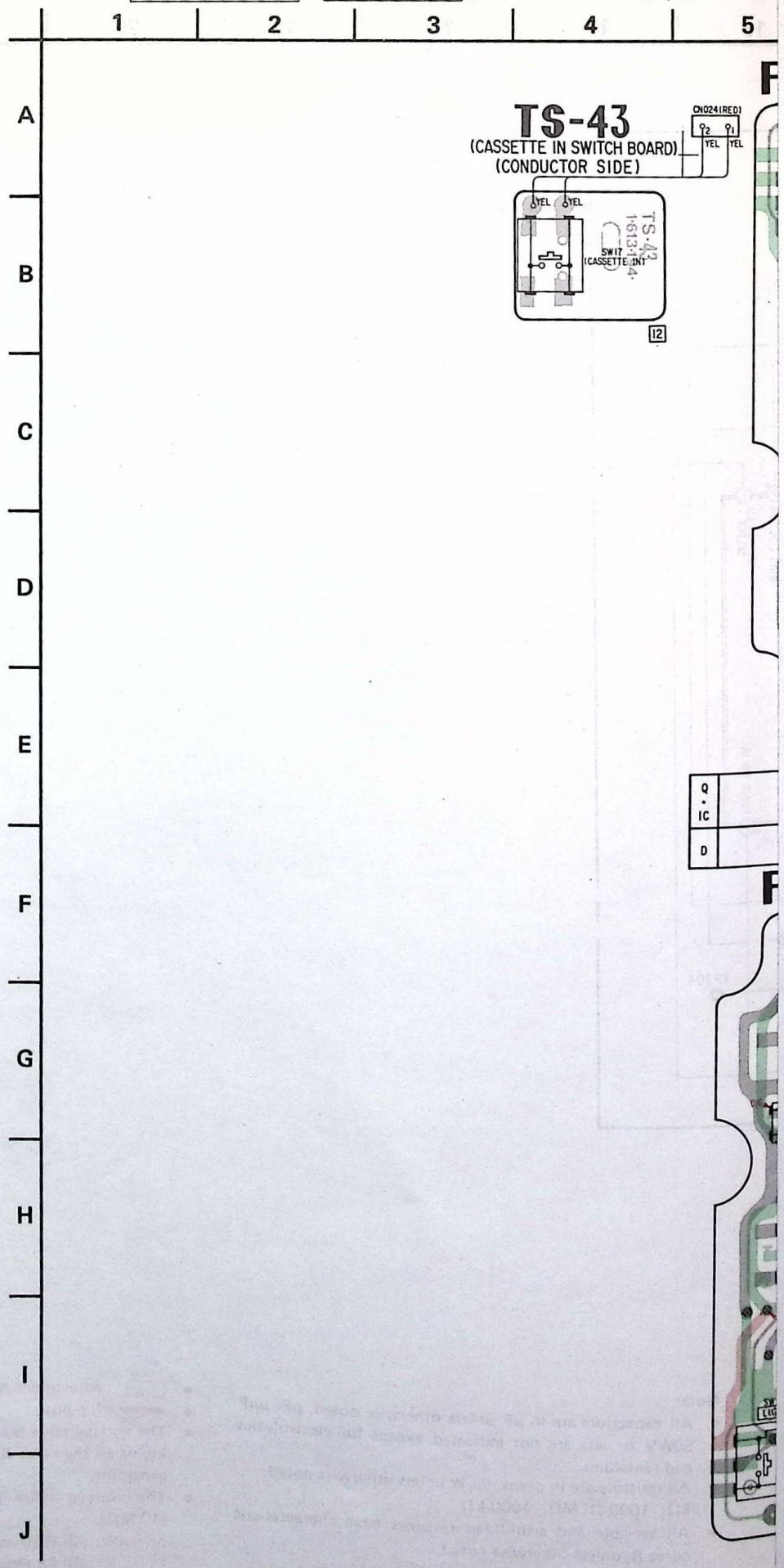

[SYSTEM CONTROL/INDICATOR]

4 5 6 7 8 9 10 11 12 13 14 15 16 17 18 19 20

A B C D E F G H I J

TS-43
(CASSETTE IN SWITCH BOARD)
(CONDUCTOR SIDE)

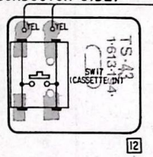

FD-3 (SYSTEM CONTROL / INDICATOR BOARD) (CONDUCTOR SIDE)

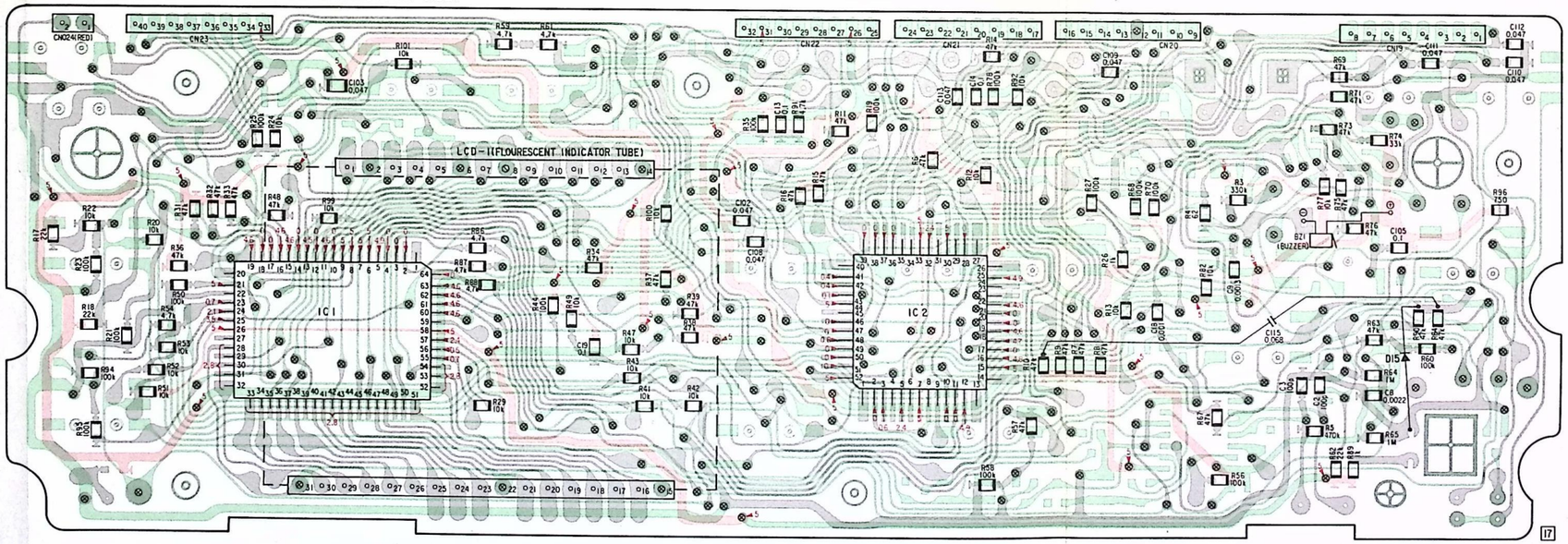

FD-3 (SYSTEM CONTROL / INDICATOR BOARD) (COMPONENT SIDE)

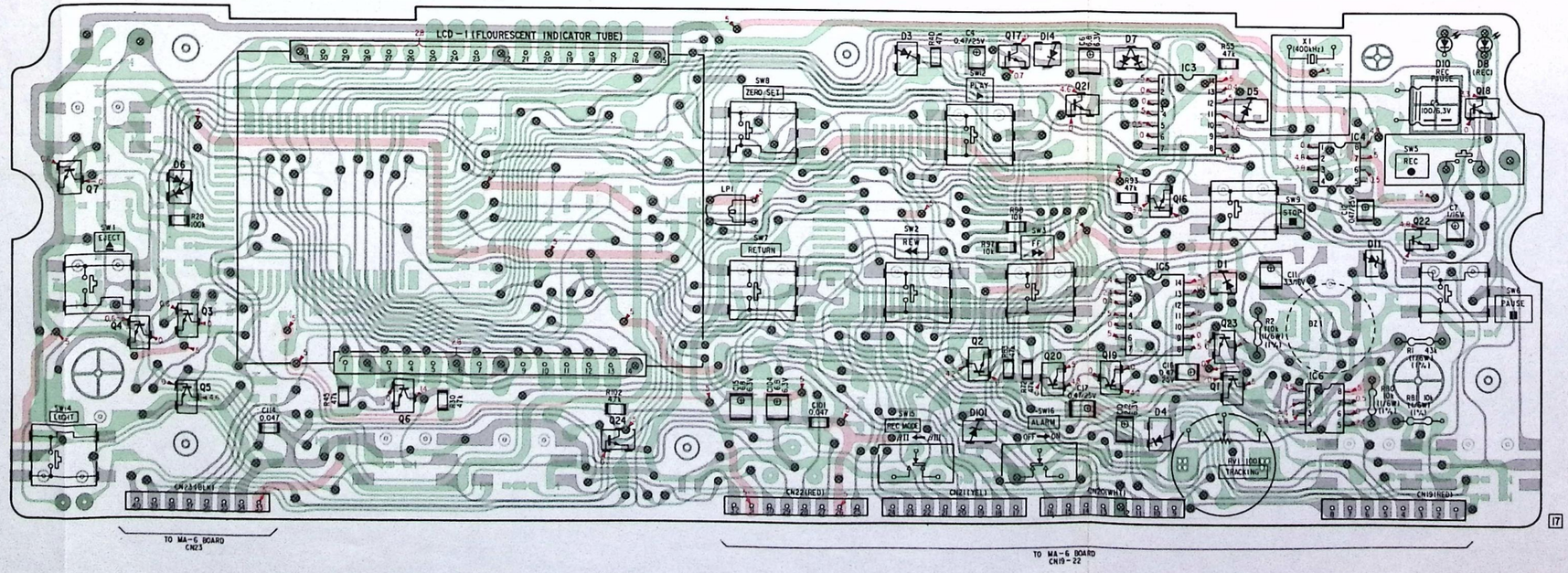

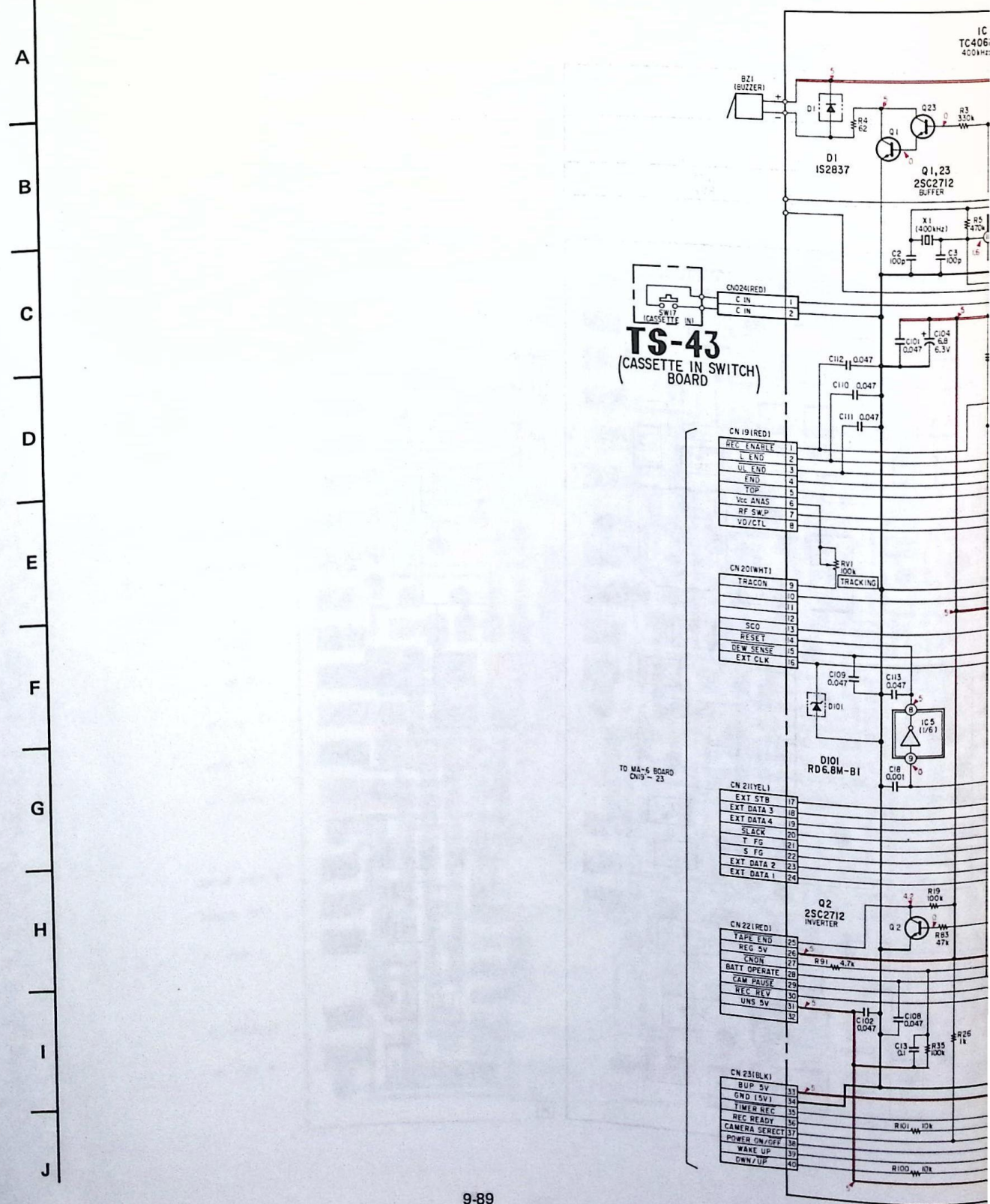
1
2
3
4
5
6
7
A
B
C
D
E
F
G
H
I
J
BZ1 (BUZZER)
D1
IS2837
R4 62
Q23
Q1
R3 330k
Q1,23
2SC2712
BUFFER
X1 (400kHz)
R5 470k
C2 100p
C3 100p
CN024(RED)
C IN 1
C IN 2
SW17 (CASSETTE IN)
TS-43
(CASSETTE IN SWITCH) BOARD
C101 0.047
C104 6.8 6.3V
C112 0.047
C110 0.047
C111 0.047
CN 19(RED)
REC ENABLE 1
L END 2
UL END 3
END 4
TOP 5
Vcc ANAS 6
RF SW.P 7
VD/CTL 8
RV1 100k
TRACKING
CN 20(WHT)
TRACON 9
10
11
12
SCO 13
RESET 14
DEW SENSE 15
EXT CLK 16
C109 0.047
C113 0.047
D101
IC5 (1/6)
D101
RD6.8M-B1
C18 0.001
TO MAIN BOARD CN19~23
CN 21(YEL)
EXT STB 17
EXT DATA 3 18
EXT DATA 4 19
SLACK 20
T FG 21
S FG 22
EXT DATA 2 23
EXT DATA 1 24
Q2
2SC2712
INVERTER
R19 100k
Q2
R83 47k
CN 22(RED)
TAPE END 25
REG 5V 26
CNON 27
BATT OPERATE 28
CAM PAUSE 29
REC REV 30
UNS 5V 31
32
R91 4.7k
C102 0.047
C108 0.047
C13 0.1
R35 100k
R26 1k
CN 23(BLK)
BUP 5V 33
GND (5V) 34
TIMER REC 35
REC READY 36
CAMERA SERECT 37
POWER ON/OFF 38
WAKE UP 39
DWN/UP 40
R101 10k
R100 10k

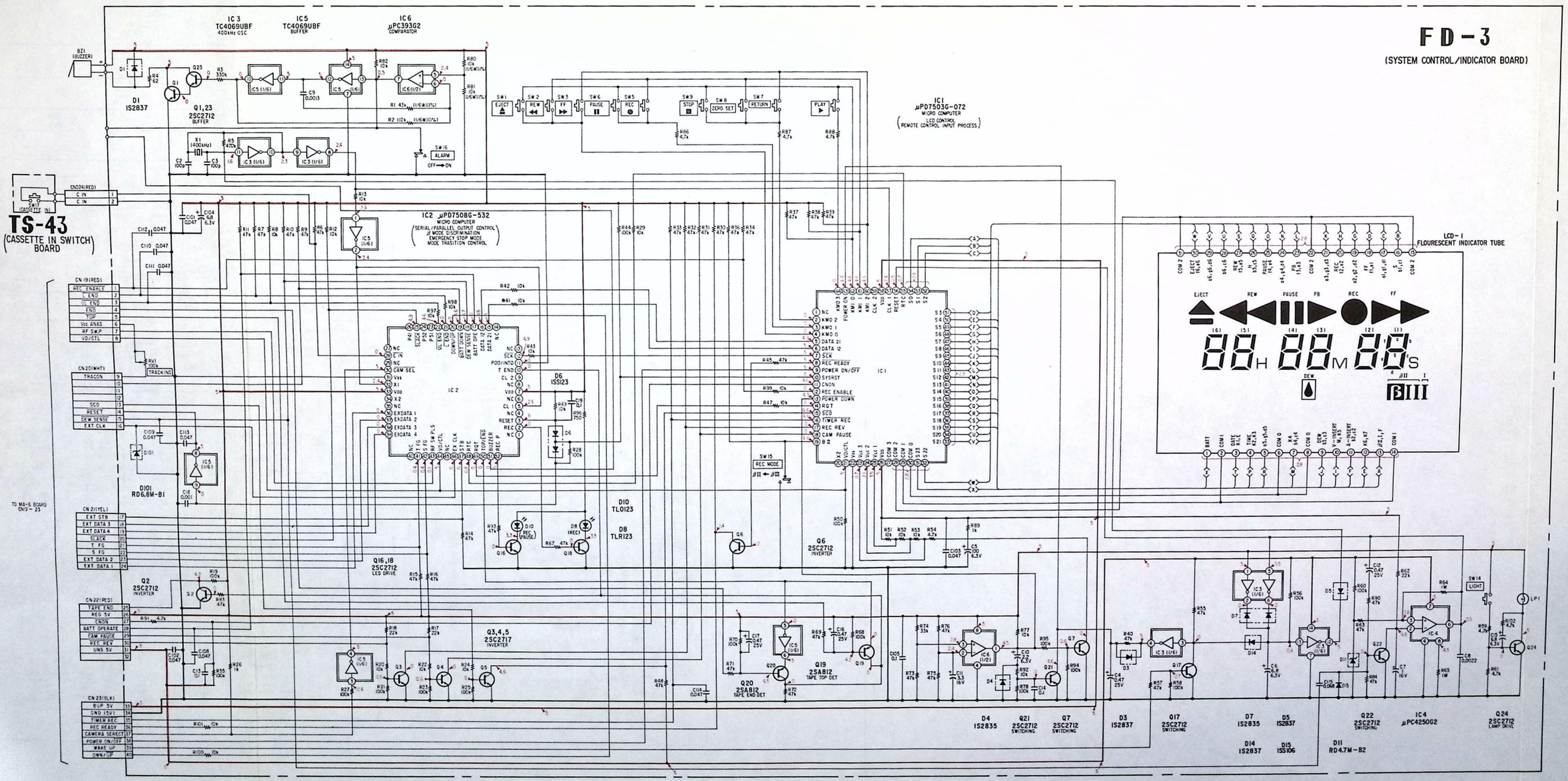
FD-3
(SYSTEM CONTROL/INDICATOR BOARD)
TS-43
(CASSETTE IN SWITCH) BOARD
IC1 μPD7503G-072 MICRO COMPUTER (REMOTE CONTROL INPUT PROCESS)
IC2 μPD7508G-532 MICRO COMPUTER (SERIAL/PARALLEL OUTPUT CONTROL, μ MODE DISCRIMINATION, EMERGENCY STOP MODE, MODE TRASITION CONTROL)
IC3 TC4069UBF 400kHz OSC
IC5 TC4069UBF BUFFER
IC6 μPC393G2 COMPARATOR
LCD-1 FLOURESCENT INDICATOR TUBE
EJECT REW PAUSE PB REC FF
Q1,23 2SC2712 BUFFER
Q2 2SC2712 INVERTER
Q3,4,5 2SC2717 INVERTER
Q6 2SC2712 INVERTER
Q16,18 2SC2712 LED DRIVE
Q17 2SC2712 SWITCHING
Q19 2SA812 TAPE TOP DET
Q20 2SA812 TAPE END DET
Q21 2SC2712 SWITCHING
Q22 2SC2712 SWITCHING
Q24 2SC2712 LAMP DRIVE
D1 IS2837
D4 IS2835
D7 IS2835
D14 IS2837
D5 IS2837
D15 ISS106
D3 IS2837
D6 ISS123
D8 TLR123
D10 TLO123
D11 RD4.7M-B2
D101 RD6.8M-B1
IC4 μPC4250G2
SW1 EJECT
SW2 REW
SW3 FF
SW6 PAUSE
SW5 REC
SW9 STOP
SW8 ZERO SET
SW7 RETURN
PLAY
SW16 ALARM
SW15 REC MODE
SW14 LIGHT
CN19(RED)
CN20(WHT)
CN21(YEL)
CN22(RED)
CN23(BLK)
TO MA-6 BOARD CN9-23

SYSTEM CONTROL INDICATOR

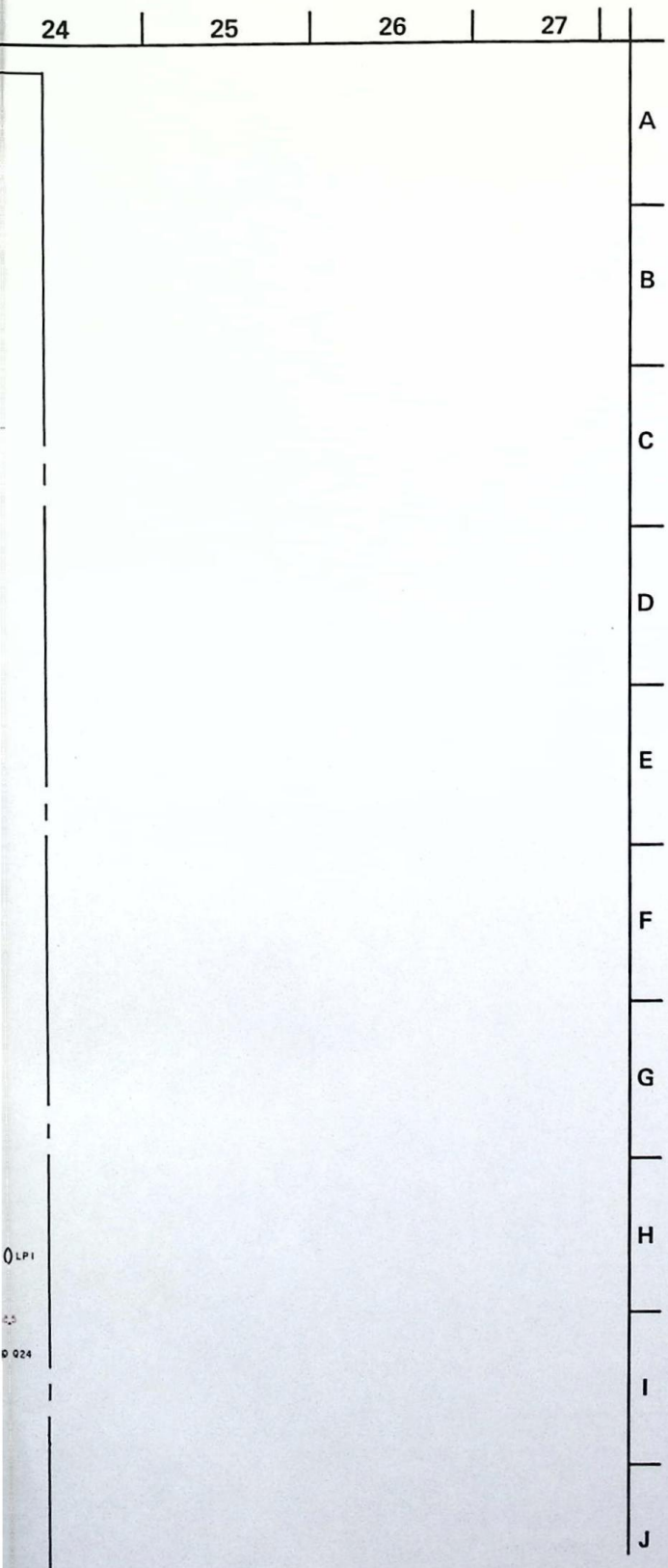

Note:

- All capacitors are in μF unless otherwise noted. pF: μμF
  50WV or less are not indicated except for electrolytics and tantalums.
- All resistors are in ohms, 1/10 W unless otherwise noted.
  kΩ: 1000 Ω, MΩ: 1000 kΩ
- : fusible resistor.
- : panel designation.
- All variable and semi-fixed resistors have characteristic curve B, unless otherwise noted.
- : adjustment for repair.
- : B+ bus.
- Voltage value: STOP mode and the flourescent indicator tube indicated "0 H 00 M 00 S".
- The voltage value is measured using a digital tester (10 MΩ).

VIDEO VIDEO

Note:
- ● ⊗ : Through hole.
- ○ : component-side pattern.
- ○ : B + pattern

VIDEO VIDEO

YM-1 [Y/COLOR MIX]

Note:
- ⊗ : Through hole.
- : component-side pattern.
- : B + pattern

Q IC	(Y/C MIX BOARD) IC2	IC3					2	IC1	3	1				
D	5	4						3		2 1				
ADJ					RV1					RV3 RV2				

YM-1 (Y/C MIX BOARD)

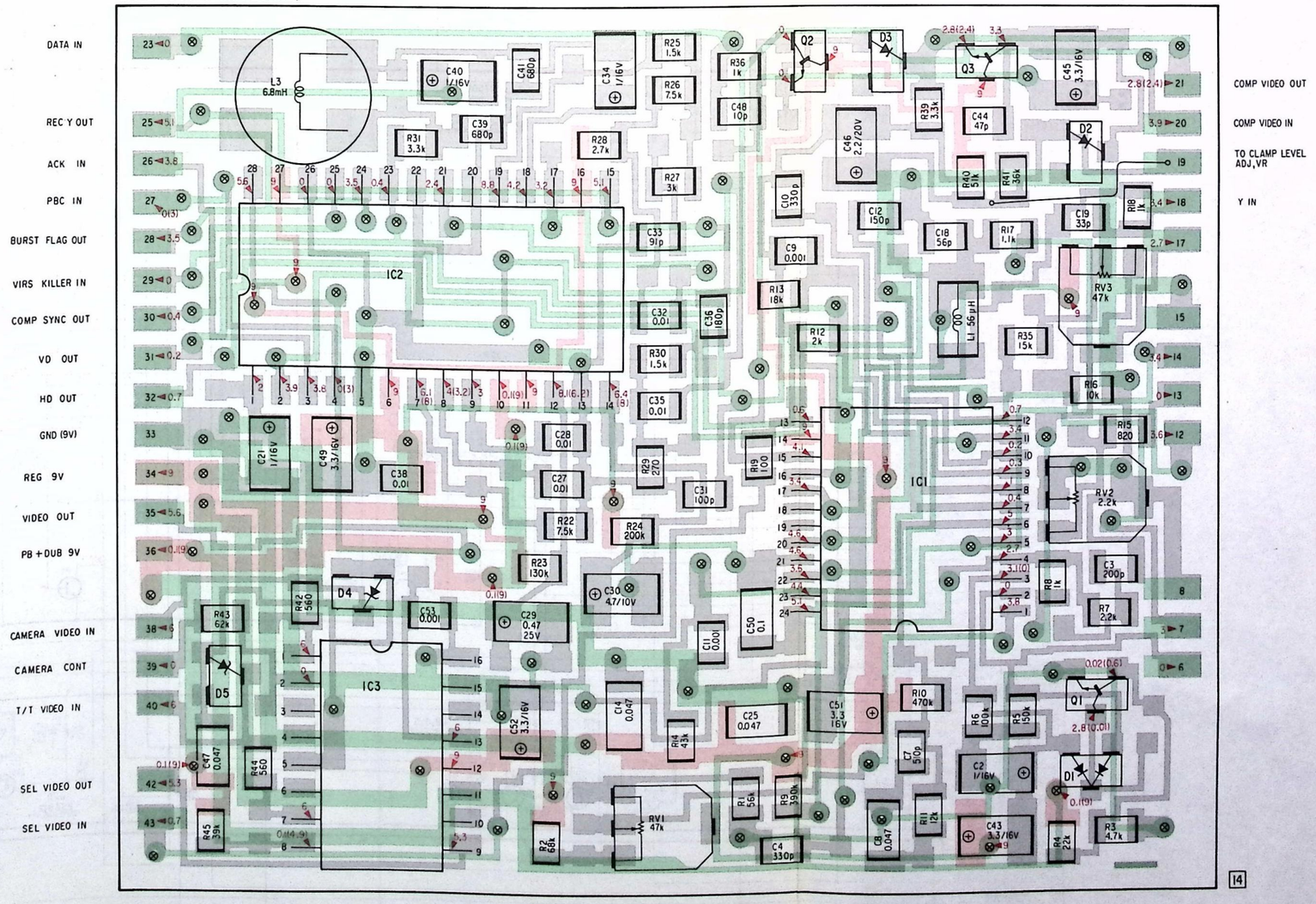

YM-1 [Y/COLOR MIX]

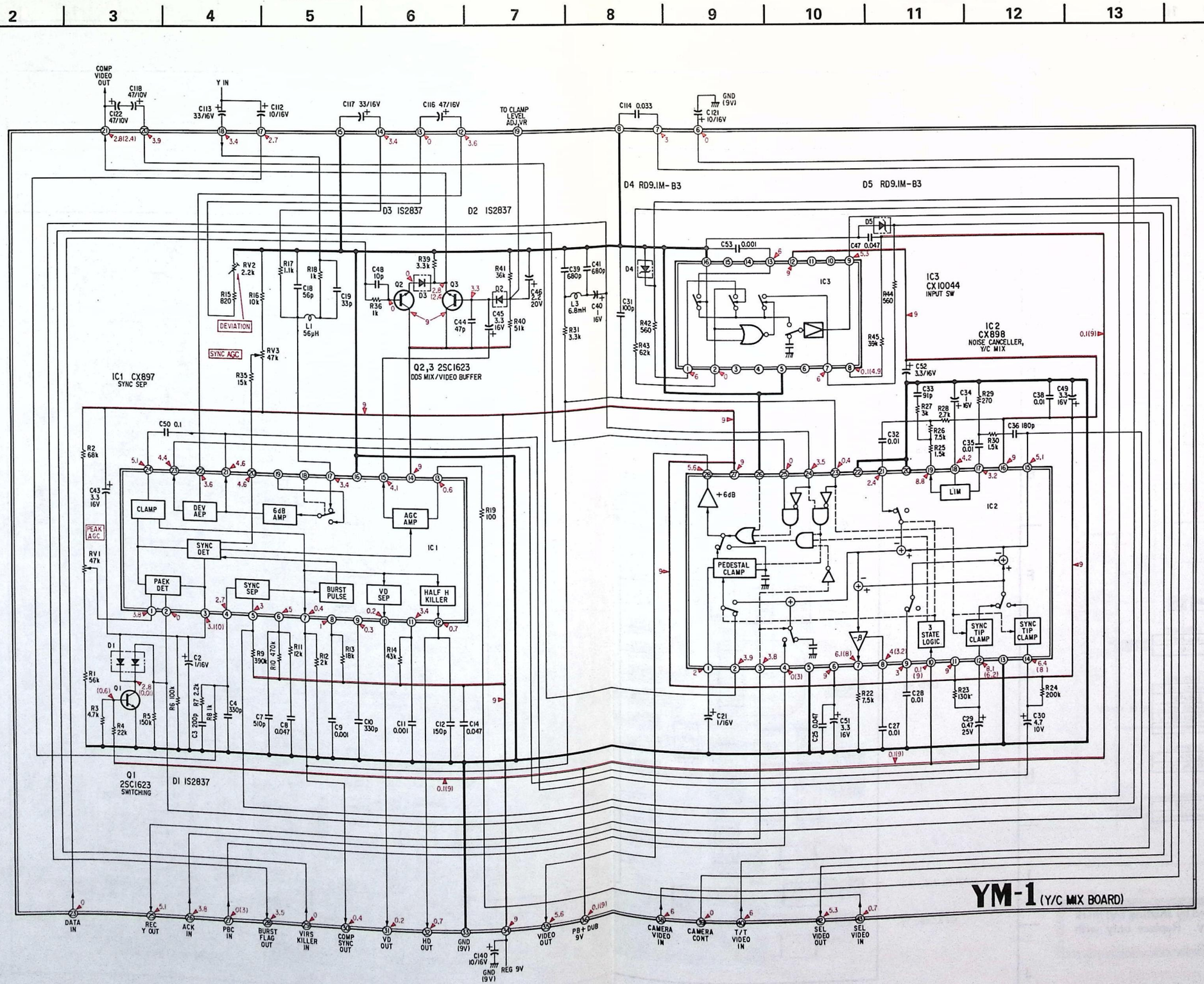

YM-1 (Y/C MIX BOARD)

Note:

- All capacitors are in μF unless otherwise noted. pF: μμF 50WV or less are not indicated except for electrolytics and tantalums.
- All resistors are in ohms, 1/10 W unless otherwise noted. kΩ: 1000 Ω, MΩ: 1000 kΩ
- All variable and semi-fixed resistors have characteristic curve B, unless otherwise noted.
- ▭ : adjustment for repair.
- ═══ : B+ bus.
- The voltage value is a reference value between the grounding when the color bar signal is received from a color bar generator.
- The voltage value is measured using a digital tester (10 MΩ).
  no mark: βIII REC mode
  ( ) : βIII PB mode

OM-1

(REMOTE CONTROL BOARD)
(CONDUCTOR SIDE)

Q, IC	D
011	
	004-011
010, 009	001
IC001	003, 002
008, 001	
007-002	

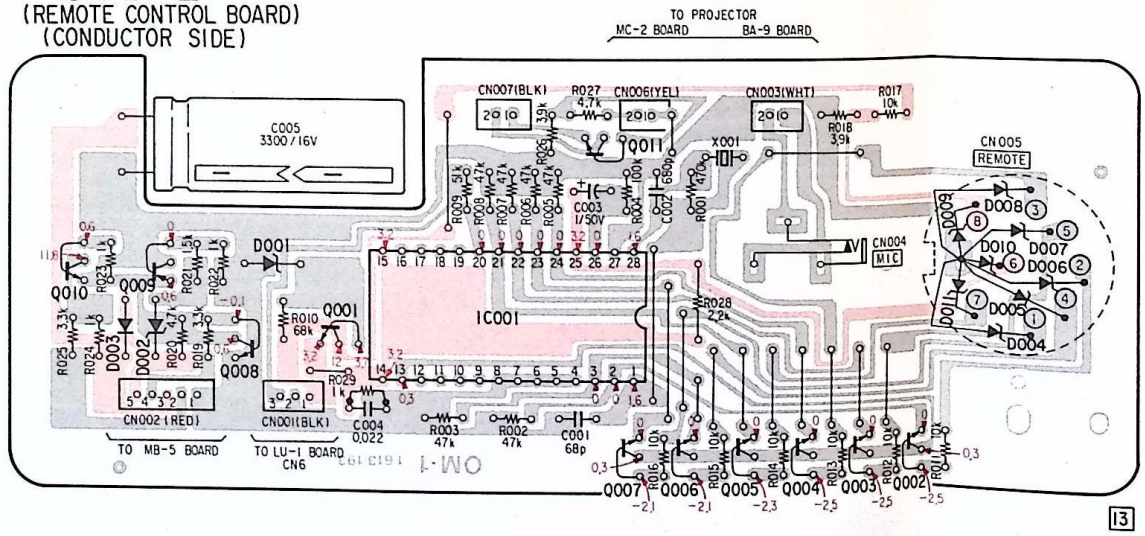

13

OM-1 (REMOTE CONTROL BOARD)

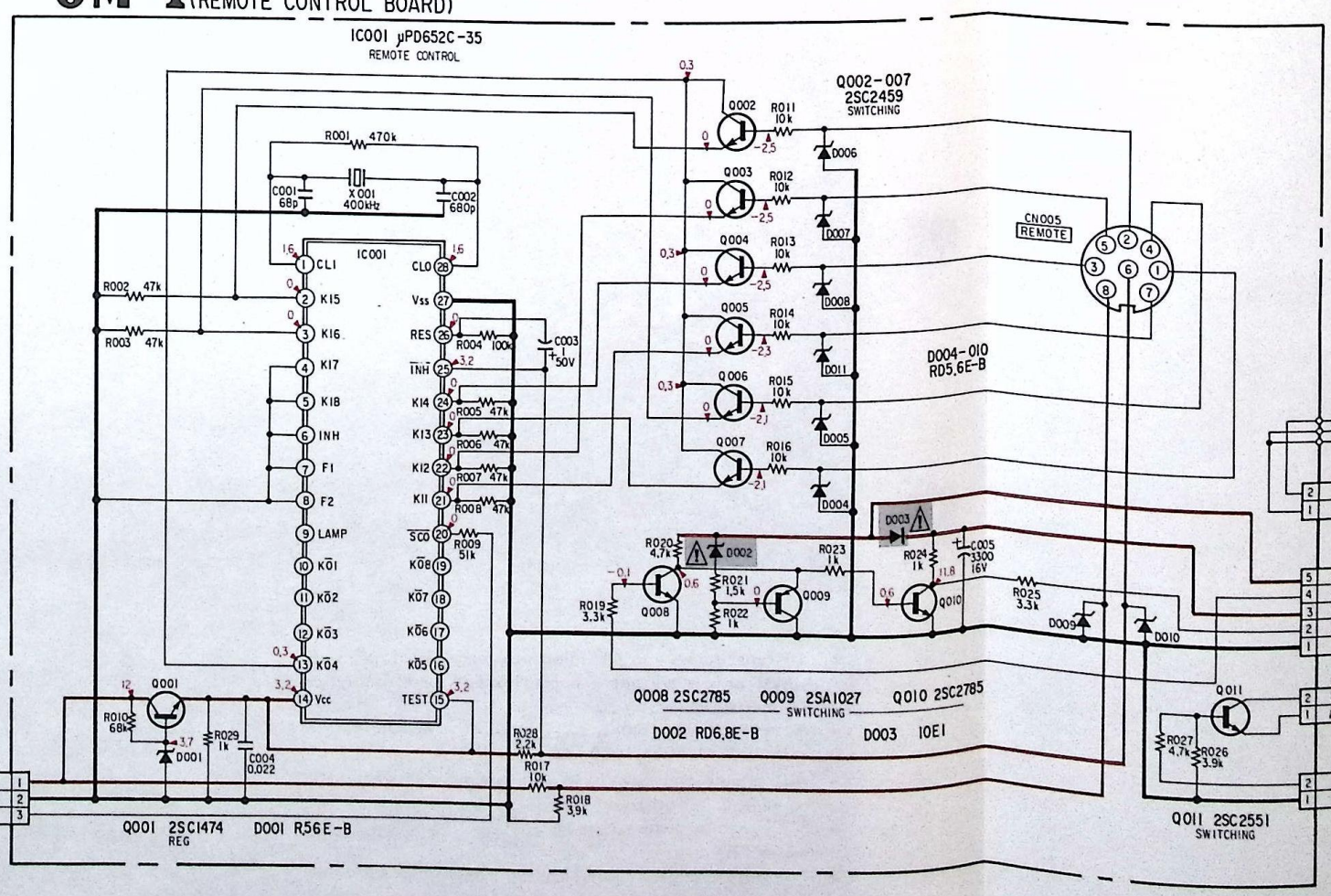

Note:

- All capacitors are in μF unless otherwise noted. pF: μμF 50WV or less are not indicated except for electrolytics and tantalums.
- All resistors are in ohms, 1/10 W unless otherwise noted. kΩ: 1000 Ω, MΩ: 1000 kΩ
- ▭ : panel designation.
- ▬ : B+ bus.
- The voltage value is a reference value between the grounding when the color bar signal is received from a color bar generator.
- The voltage value is measured using a digital tester (10 MΩ).
  no mark: βIII REC mode
  ( ) : βIII PB mode

Note: The components identified by shading and mark ⚠ are critical for safety. Replace only with part number specified.

VIDEO VIDEO

JG-1 (PICTURE SERCH)

1 2 3 4 5 6 7 8 9 10 11 12

A B C D E F G H I J

Note:

JG-1 (PICTURE SEACH BOARD)

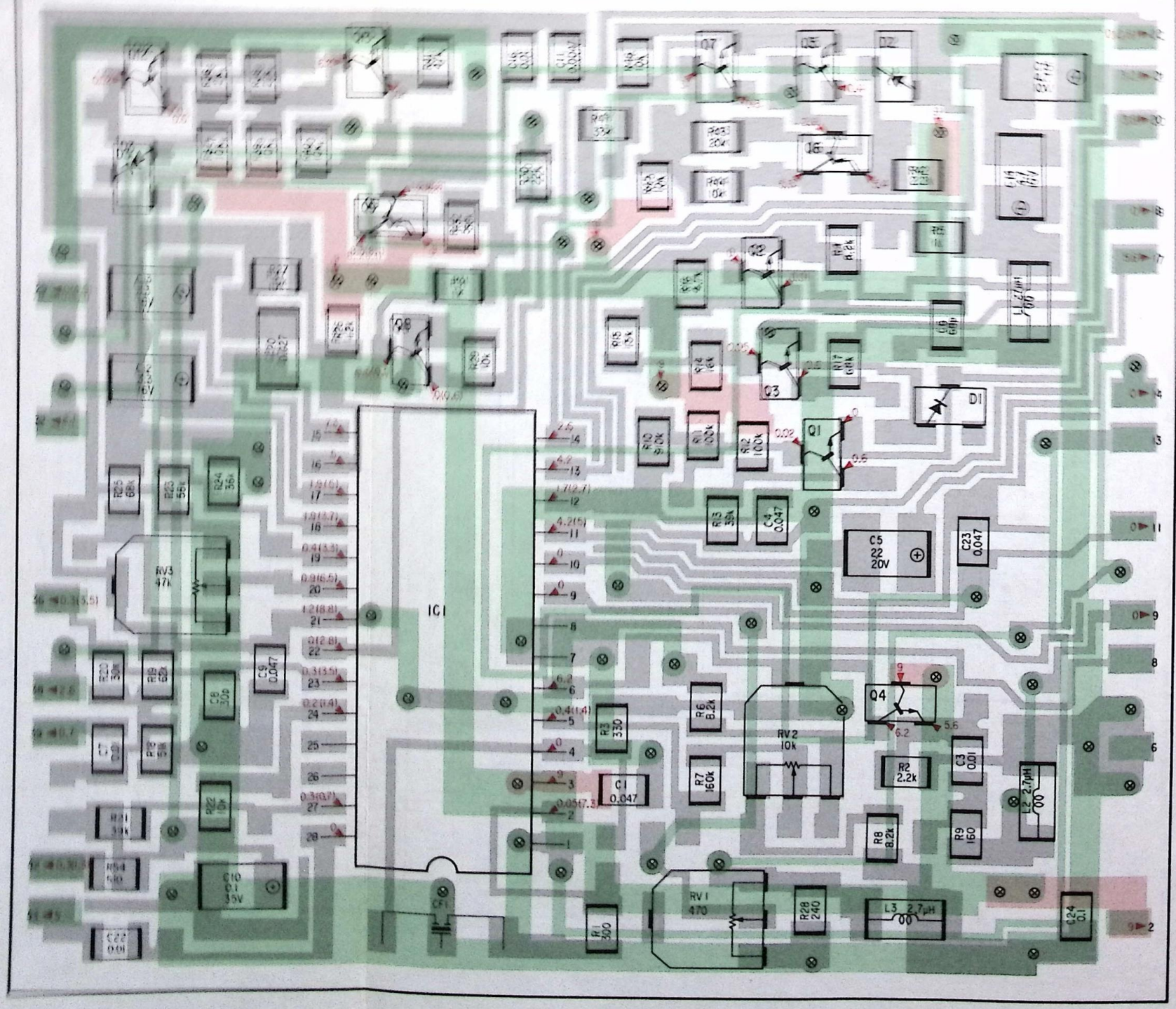

JG-1 [PICTURE SERCH]

JG-1 (PICTURE SEACH BOARD)

D3 IS2837

IC1 CX20001 JOG PB VIDEO PROCESS

Q12,13 2SC1623 AFC STATER CIRCUIT

Q9 2SA812 PB+DUB 9V SWITCHING

Q8 2SC1623 PB+DUB 9V SWITCHING

REG 9V

GND (9V)

GND2

CHECK LAND

VIDEO MUTE IN

GND 1

AM MOD IN

DL103 10.7MHz 1/2H

VIDEO IN

MC IN

ACK IN

VIDEO OUT

SKEW OUT

REF 3.58MHz IN

ERROR VOLTAGE HOLD C123 10/10V

HD IN

RF SW P(1) OUT

CHECK PIN

RF SW P.IN

PB+DUB IN

3.58M IN

ERROR IN

COMP OUT

HD IN

VCC 1

AFC

SKEW DET

AGC

QUASI VD INSERT

VD GEN

X3 AGC

DET

10.7MHz AM MOD

CLAMP

VIDEO MUTE SW

AM MOD IN

GND1

VCC 10.7M IN

AM MOD OUT

GND2

VIDEO MUTE

P. IN

RF SW

JOG AGC

JOG DL Y LEVEL

SCEW OSC

Q4 2SA1623 BUFFER

Q1 2SA1623 VIDEO MUTE SWITCHING

Q2 2SA1623 ACK TRAP SWITCHING

D1 IS2837

Q3 2SA1623 ACK SWITCHING

D2 RD5.6MB-1

Q6 2SA812 Q5 2SC1623 Q7 2SA1623 — RF SWITCHING PULSE SHAPE —

Note:

- All capacitors are in μF unless otherwise noted. pF: μμF 50WV or less are not indicated except for electrolytics and tantalums.
- All resistors are in ohms, 1/10 W unless otherwise noted. kΩ: 1000 Ω, MΩ: 1000 kΩ
- All variable and semi-fixed resistors have characteristic curve B, unless otherwise noted.

- ▭ : adjustment for repair.
- ═ : B+ bus.
- The voltage value is a reference value between the grounding when the color bar signal is received from a color bar generator.
- The voltage value is measured using a digital tester (10 MΩ).
  no mark: βIII REC mode
  ( ) : βIII PB mode

VB-1 [VIDEO BUFFER]

Note:
- ● ⊗ : Through hole.
- ▨ : component-side pattern.
- ▨ : B + pattern

VB-1 (VIDEO BUFFER BOARD A)

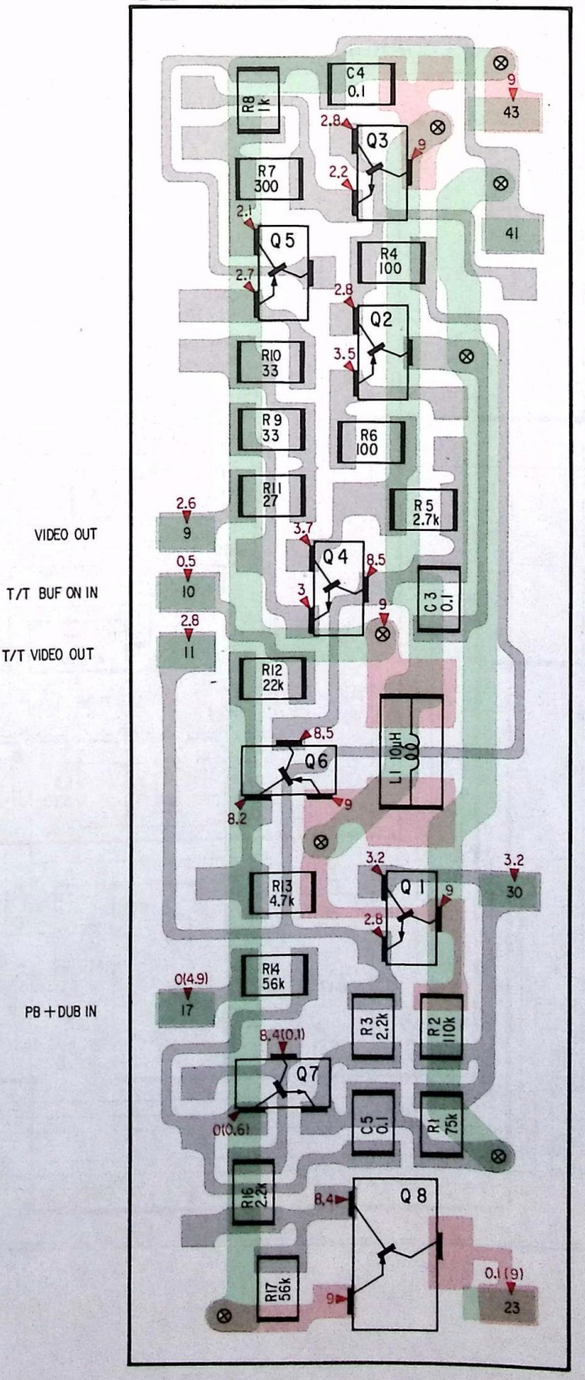

VB-1 [VIDEO BUFFER]

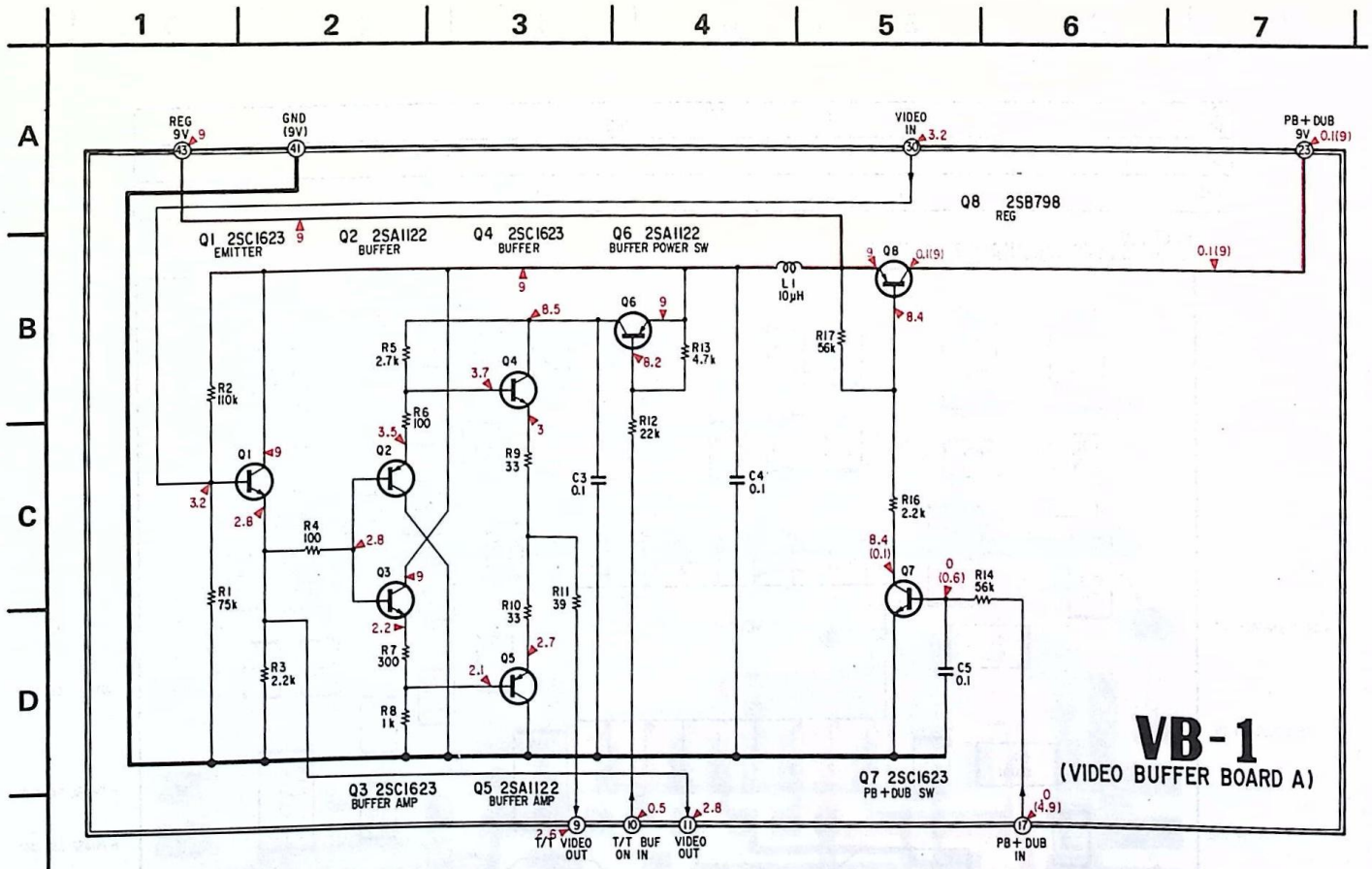

Note:

- All capacitors are in μF unless otherwise noted. pF: μμF 50WV or less are not indicated except for electrolytics and tantalums.
- All resistors are in ohms, 1/10 W unless otherwise noted. kΩ: 1000 Ω, MΩ: 1000 kΩ
- ▬▬ : B+ bus.
- The voltage value is a reference value between the grounding when the color bar signal is received from a color bar generator.
- The voltage value is measured using a digital tester (10 MΩ).
  no mark: βIII REC mode
  ( ) : βIII PB mode

YS-1 [Y/C SEP]

	1	2	3	4	5	6	7
A							
B							
C							
D							
E							
F							
G							
H							
I							
J							

IC		IC1	IC2
D	D1		
ADJ	RV1	RV2	

YS-1 (Y/C SEPARATION BOARD)

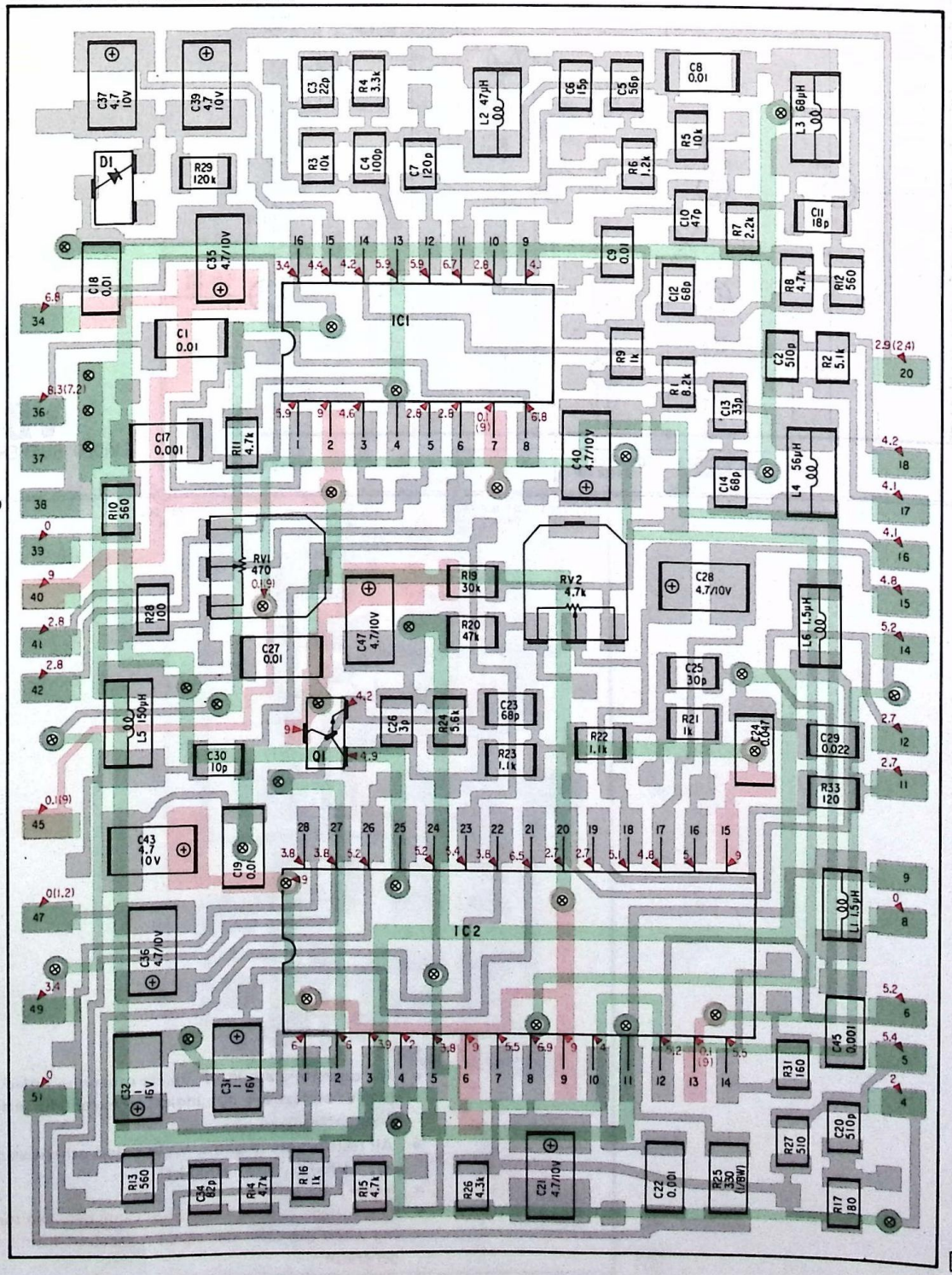

YS-1 [Y/C SEP]

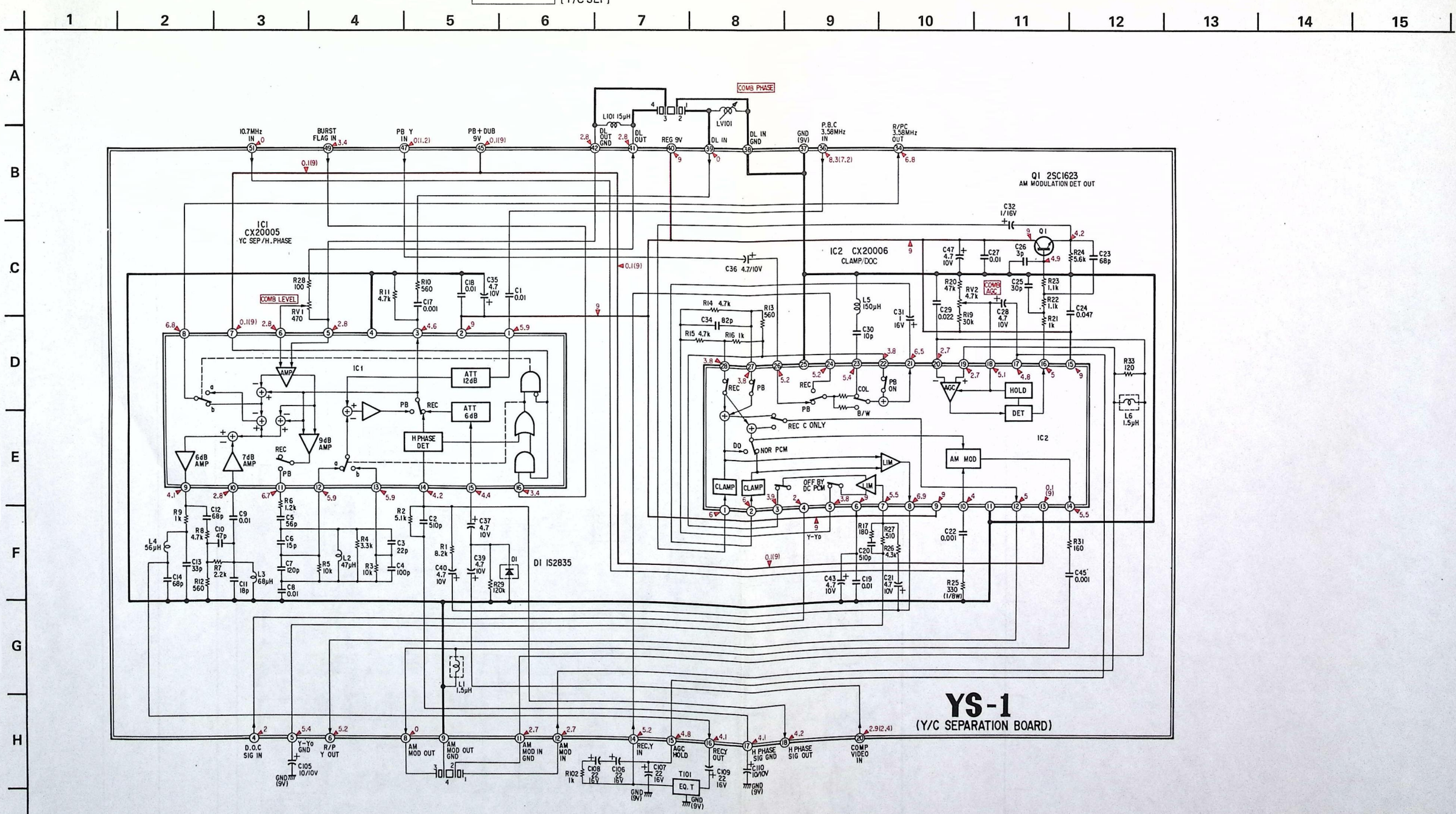

Note:

- ⊗ : Through hole.
- : component-side pattern.
- : B + pattern

Note:

- All capacitors are in μF unless otherwise noted. pF: μμF 50WV or less are not indicated except for electrolytics and tantalums.
- All resistors are in ohms, 1/10 W unless otherwise noted. kΩ: 1000 Ω, MΩ: 1000 kΩ
- All variable and semi-fixed resistors have characteristic curve B, unless otherwise noted.

- : adjustment for repair.
- : B+ bus.
- The voltage value is a reference value between the grounding when the color bar signal is received from a color bar generator.
- The voltage value is measured using a digital tester (10 MΩ).
  no mark: βIII REC mode
  ( ) : βIII PB mode

PE-3 [PRE-EMPHASIS]

Note:
- ● ⊗ : Through hole.
- ▒ : component-side pattern.
- ▒ : B + pattern

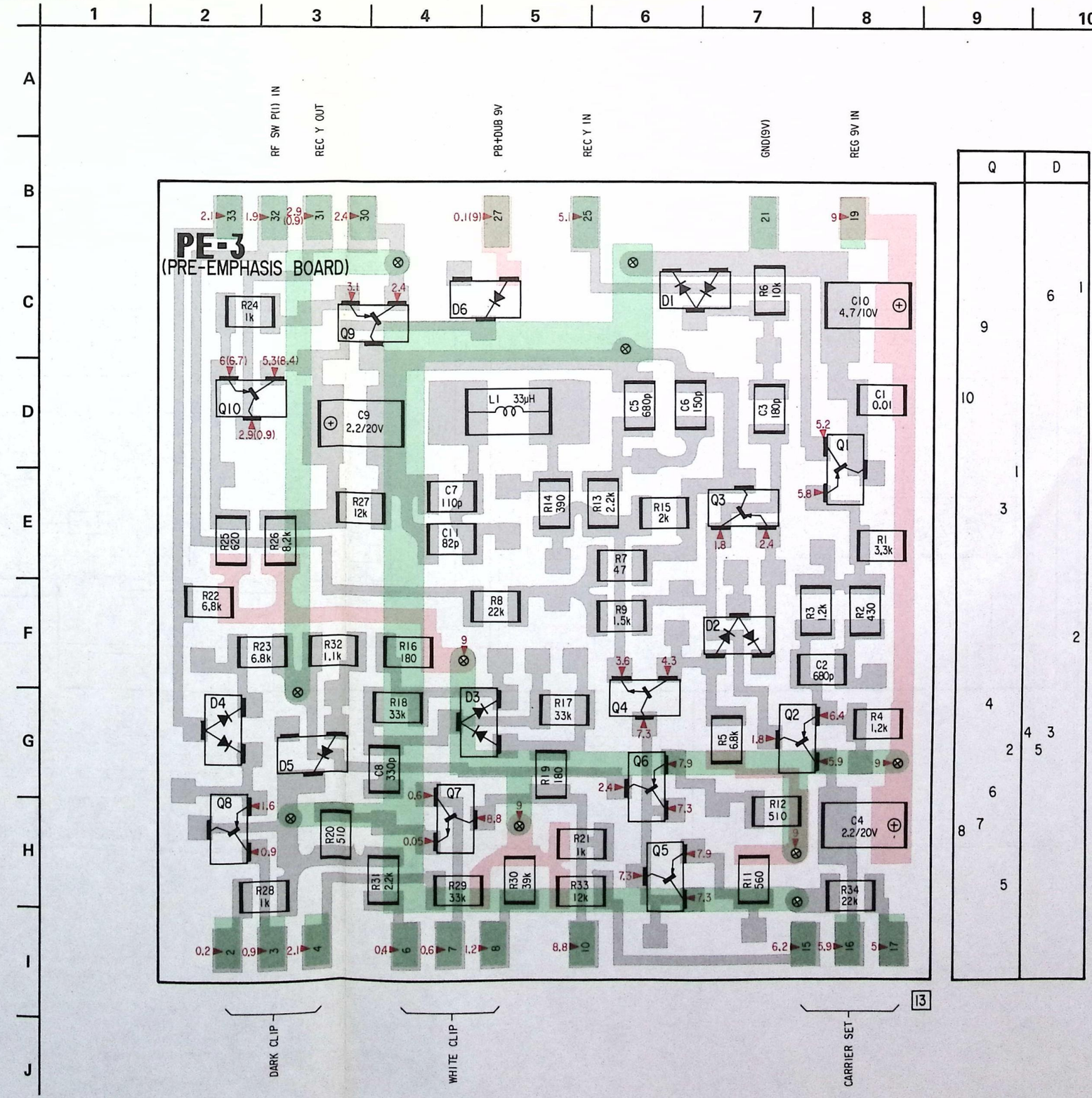

PE-3 [PRE-EMPHASIS]

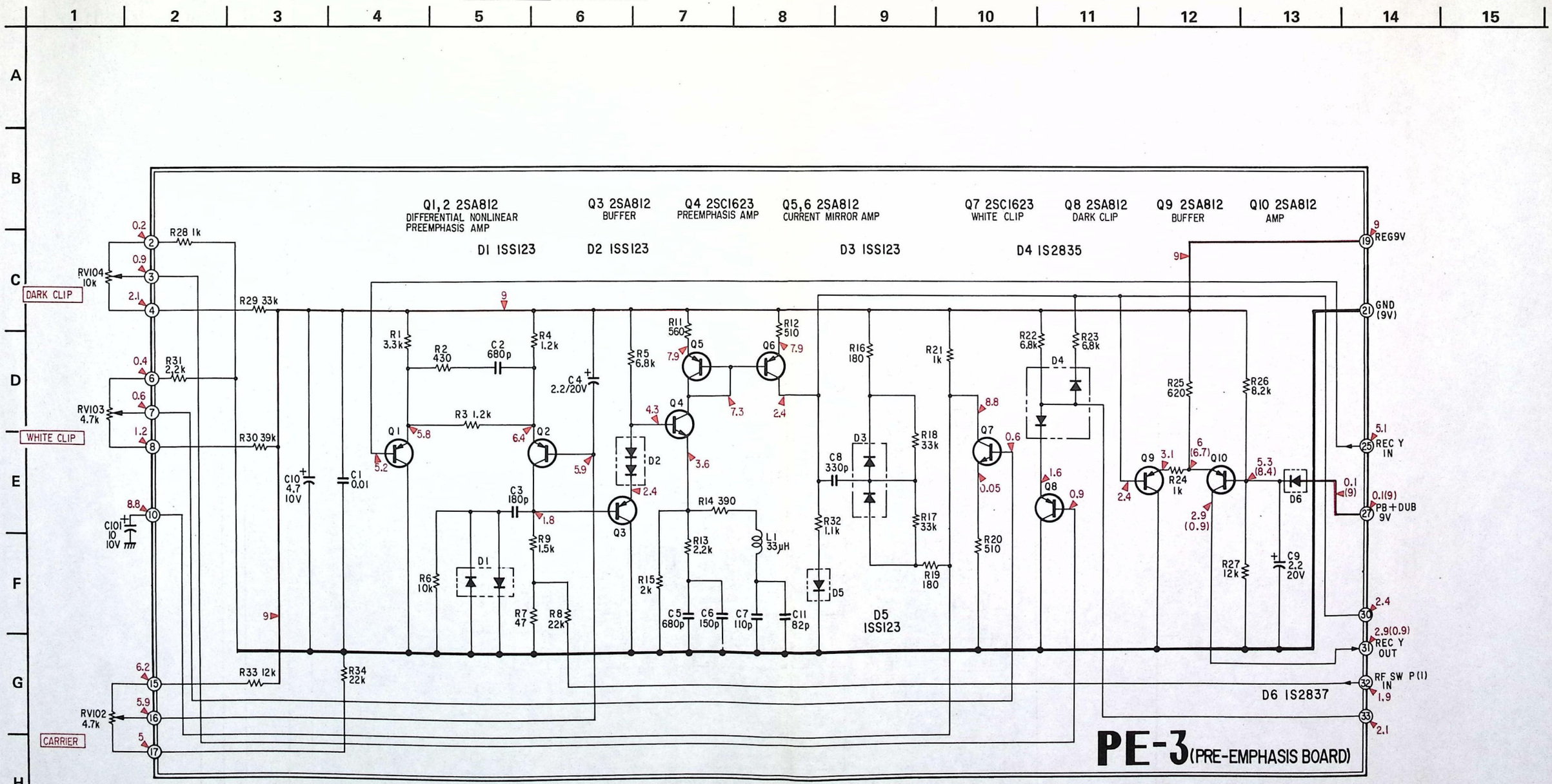

Note:

- All capacitors are in μF unless otherwise noted. pF: μμF 50WV or less are not indicated except for electrolytics and tantalums.
- All resistors are in ohms, 1/10 W unless otherwise noted. kΩ: 1000 Ω, MΩ: 1000 kΩ
- All variable and semi-fixed resistors have characteristic curve B, unless otherwise noted.

- ▭ : adjustment for repair.
- ═ : B+ bus.
- The voltage value is a reference value between the grounding when the color bar signal is received from a color bar generator.
- The voltage value is measured using a digital tester (10 MΩ).
  no mark: βIII REC mode
  ( ) : βIII PB mode

YF-1 [Y SIGNAL PROCESS]

Note:
- ● ⊗ : Through hole.
- ▒▒ : component-side pattern.
- ▒▒ : B + pattern

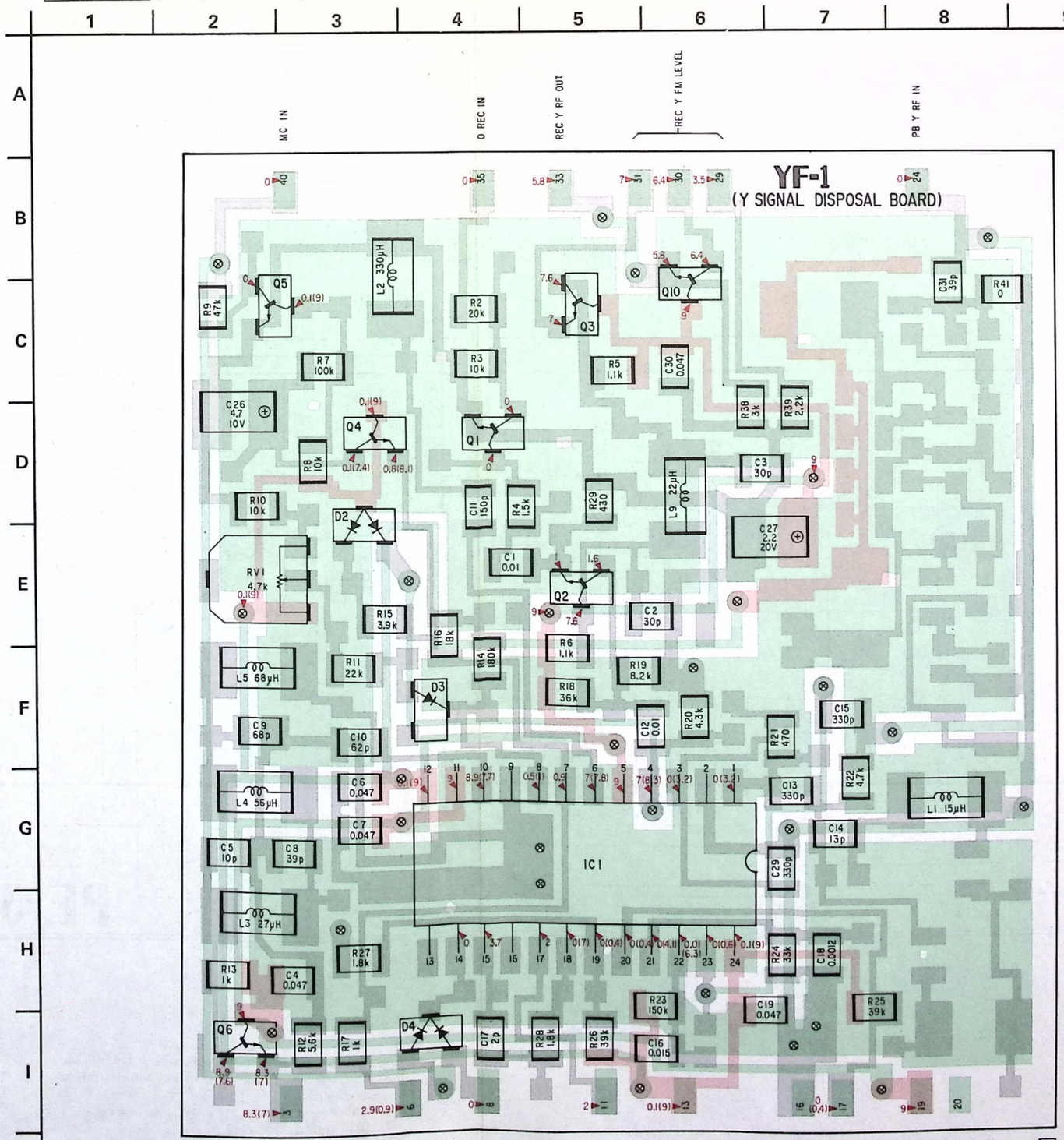

Q, IC	D	ADJ
10		
5 3		
4 1		
	2	
2		RV1
IC1	3	
6	4	

YF-1 [Y SIGNAL PROCESS]

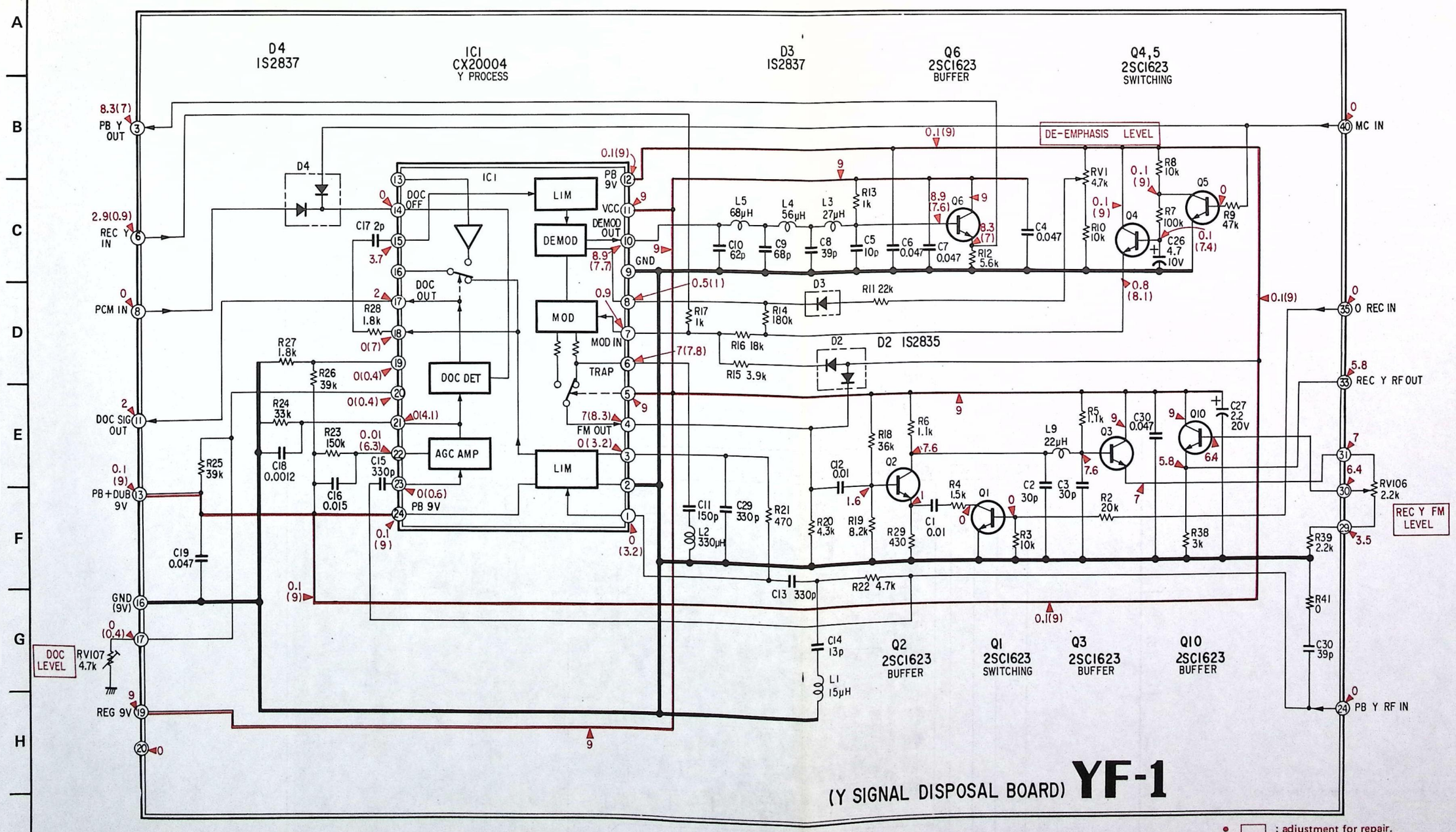

(Y SIGNAL DISPOSAL BOARD) **YF-1**

Note:

- All capacitors are in μF unless otherwise noted. pF: μμF 50WV or less are not indicated except for electrolytics and tantalums.
- All resistors are in ohms, 1/10 W unless otherwise noted. kΩ: 1000 Ω, MΩ: 1000 kΩ
- All variable and semi-fixed resistors have characteristic curve B, unless otherwise noted.

- ▭ : adjustment for repair.
- ═ : B+ bus.
- The voltage value is a reference value between the grounding when the color bar signal is received from a color bar generator.
  no mark: βIII REC mode
  ( ) : βIII PB mode

VIDEO VIDEO

1 2 3 4 5 6 7 8 9 10 11

A B C D E F G H I J

RP-11 (REC/PB BOARD)(CONDUCTOR SIDE)

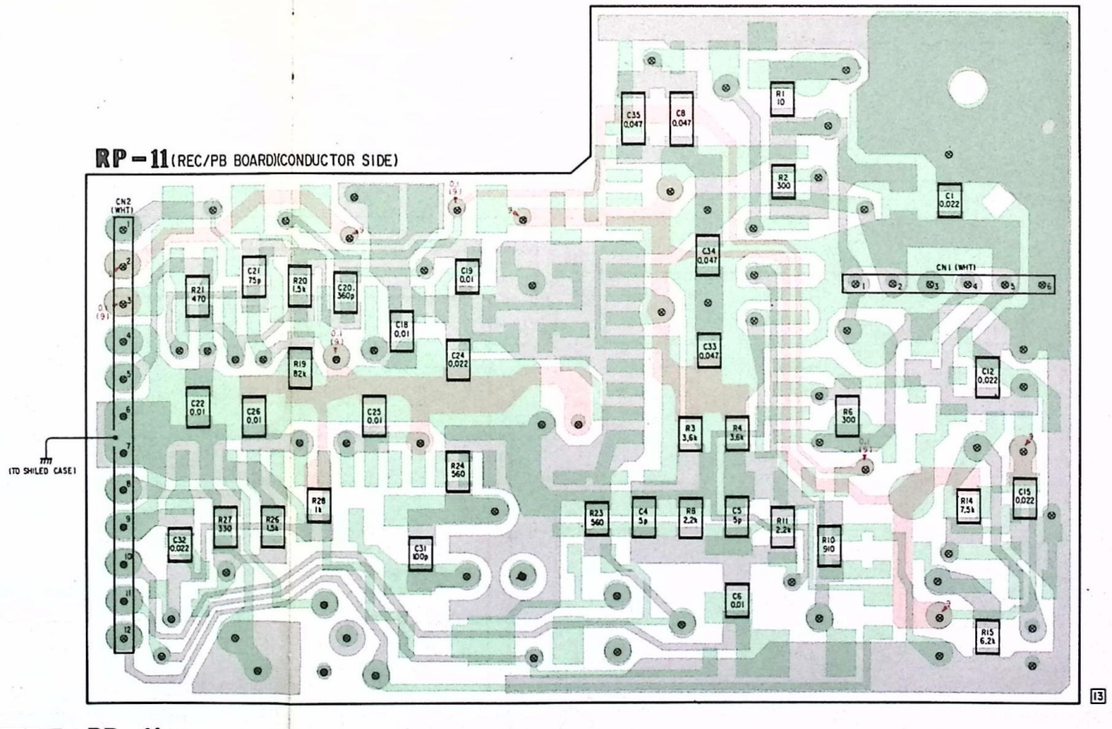

RP-11 (REC/PB BOARD)(COMPONENT SIDE)

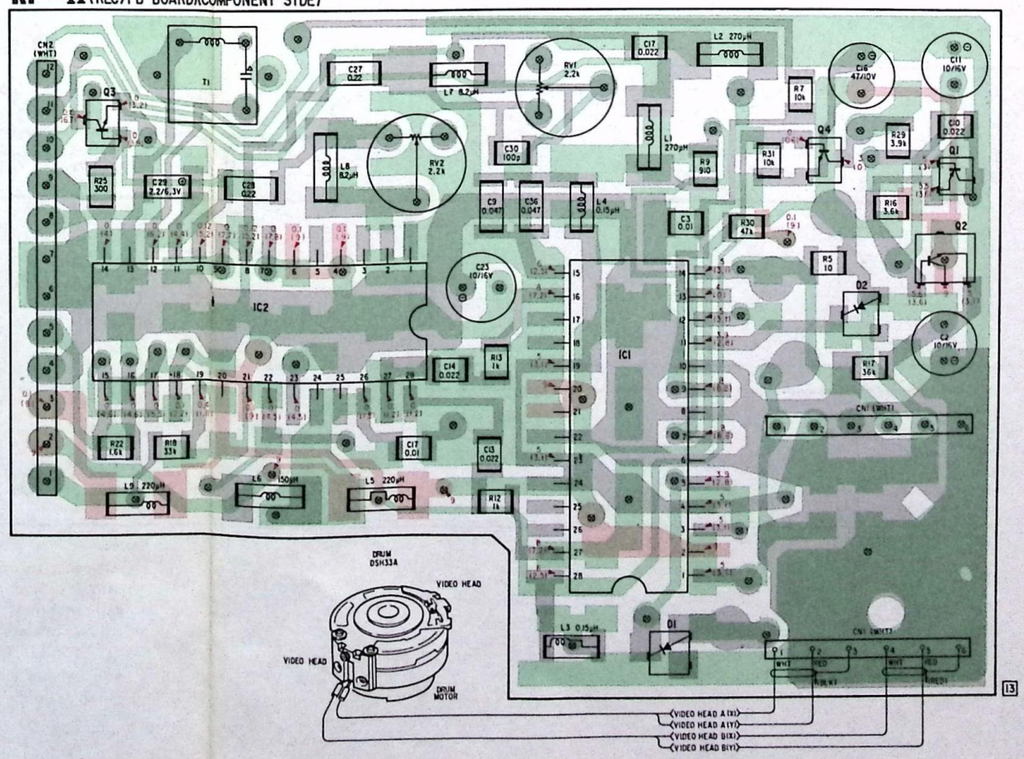

Q, IC	D	ADJ
		RV1
3		
4		RV2
1		
2		
IC2	2	
IC1		
	1	/

Note:

- Color code of sleeving over the end of the jacket.

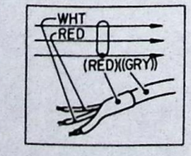

- ⊗ : Through hole.
- : component-side pattern.
- : B + pattern

RP-11 [REC/PB]

RP-11 (REC PB BOARD)

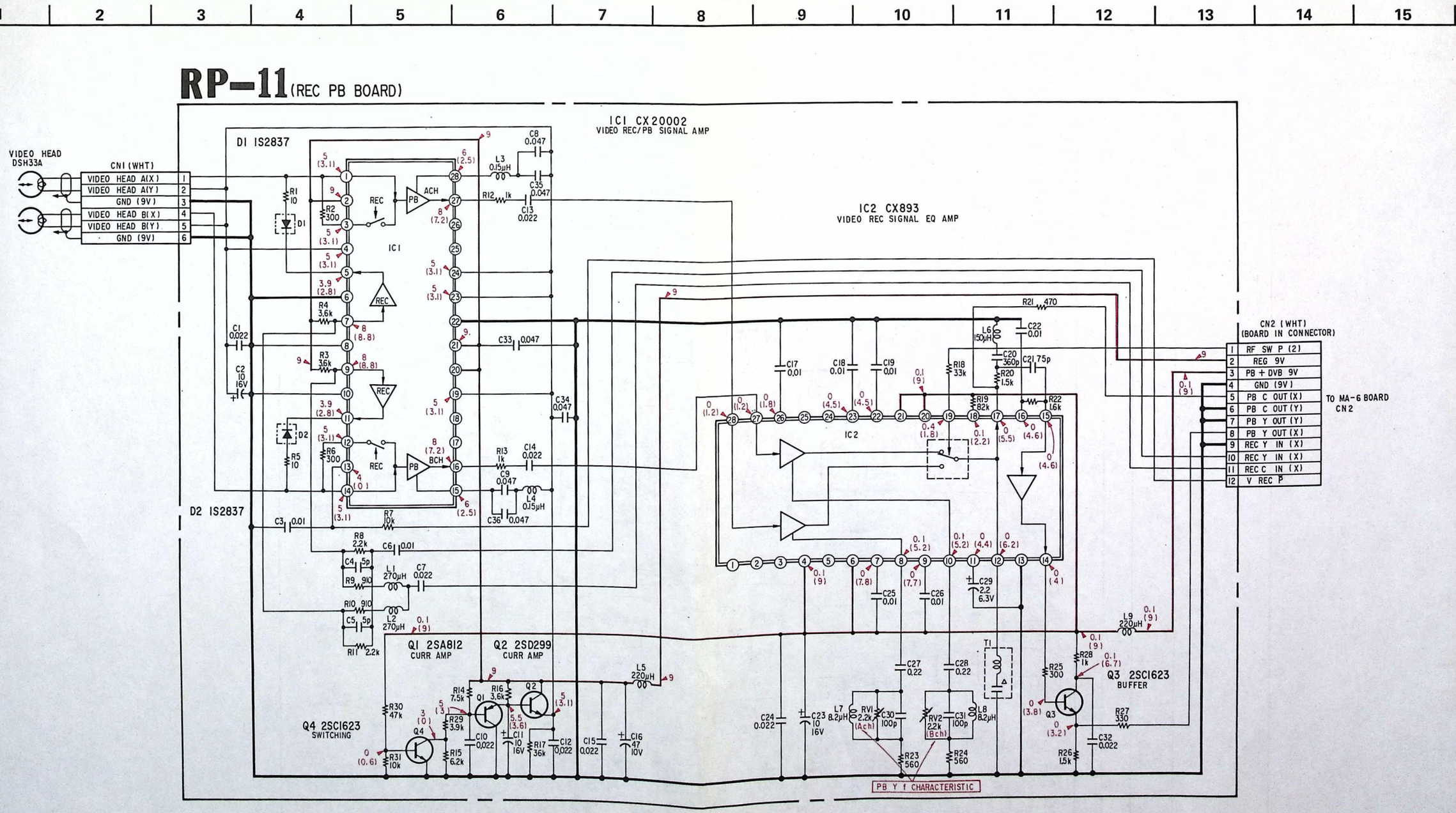

Note:

- All capacitors are in μF unless otherwise noted. pF: μμF 50WV or less are not indicated except for electrolytics and tantalums.
- All resistors are in ohms, 1/10 W unless otherwise noted. kΩ: 1000 Ω, MΩ: 1000 kΩ
- △ : internal component.
- All variable and semi-fixed resistors have characteristic curve B, unless otherwise noted.
- ▭ : adjustment for repair.
- ═ : B+ bus.
- The voltage value is a reference value between the grounding when the color bar signal is received from a color bar generator.
- The voltage value is measured using a digital tester (10 MΩ).
  no mark: βIII REC mode
  ( ) : βIII PB mode

DE-2 [DEEMPHASIS]

: B + pattern

Q, IC	D
5 6	1
7	
8	
4	
3 2 3	
2	
9 1	

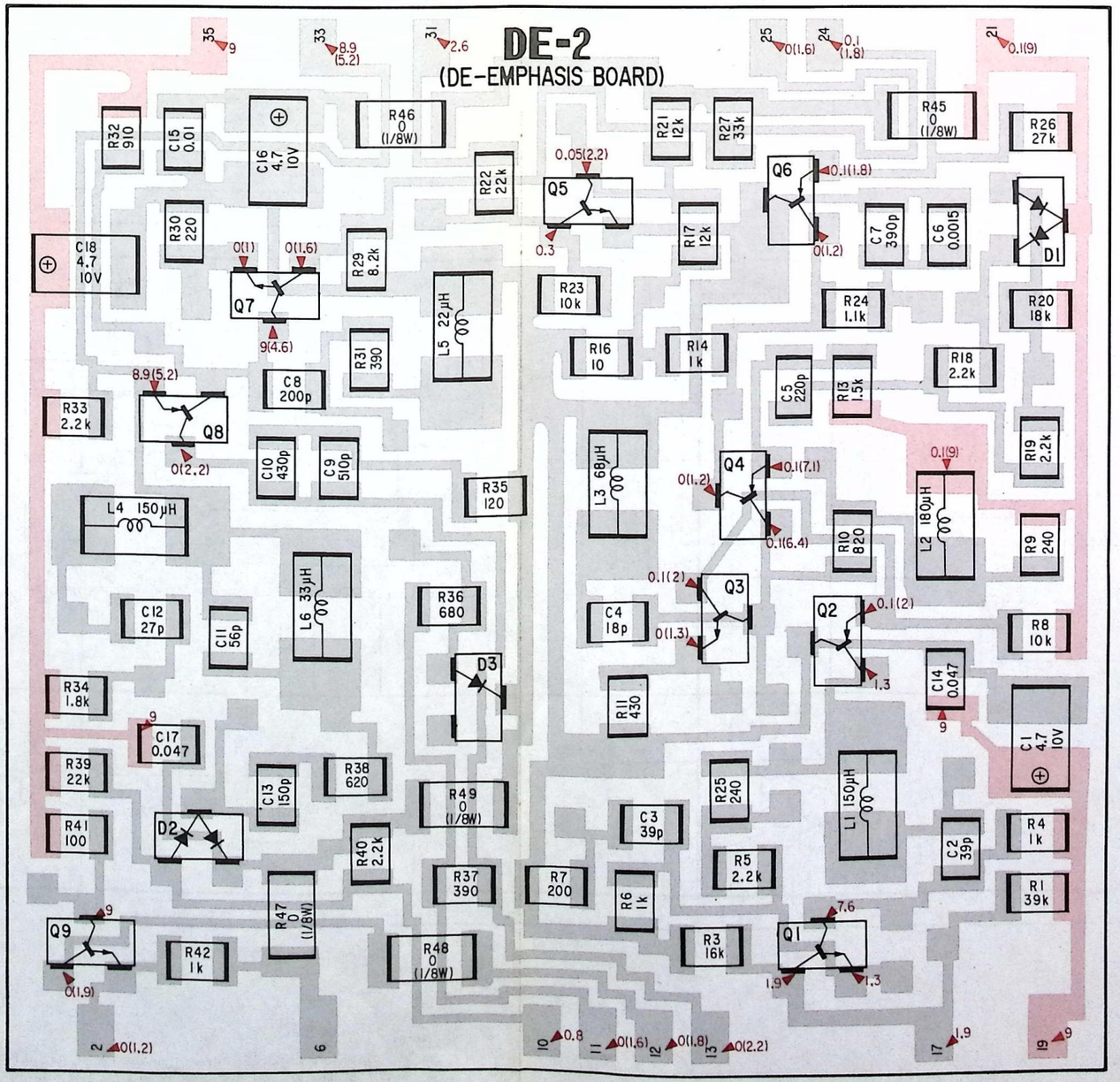

DE-2 [DEEMPAHSIS]

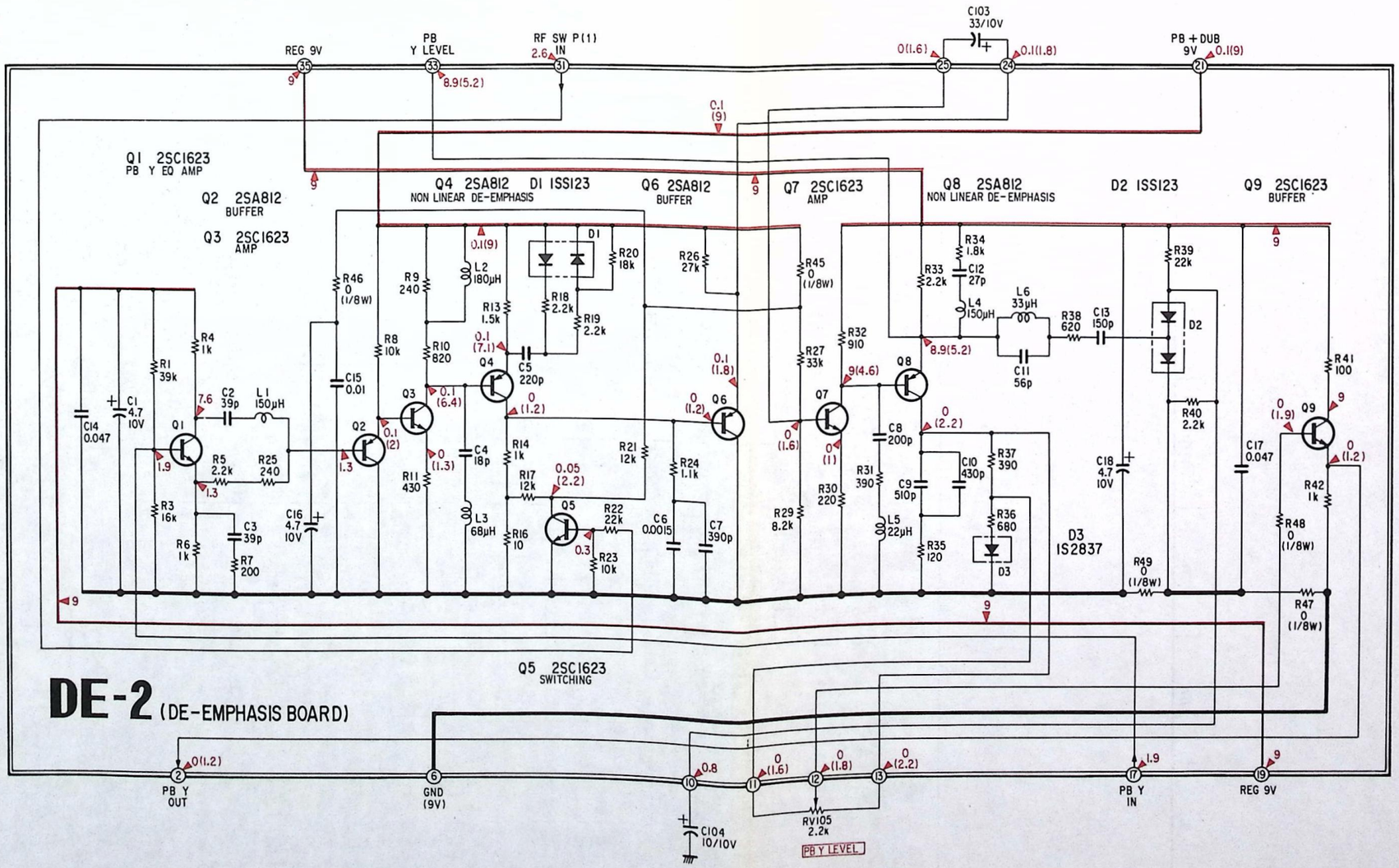

Note:

- All capacitors are in μF unless otherwise noted. pF: μμF 50WV or less are not indicated except for electrolytics and tantalums.
- All resistors are in ohms, 1/10 W unless otherwise noted. kΩ: 1000 Ω, MΩ: 1000 kΩ
- All variable and semi-fixed resistors have characteristic curve B, unless otherwise noted.

- ▭ : adjustment for repair.
- ═ : B+ bus.
- The voltage value is a reference value between the grounding when the color bar signal is received from a color bar generator.
- The voltage value is measured using a digital tester (10 MΩ).
  no mark: βIII REC mode
  ( ) : βIII PB mode

CM-4 [COLOR PROCESS]

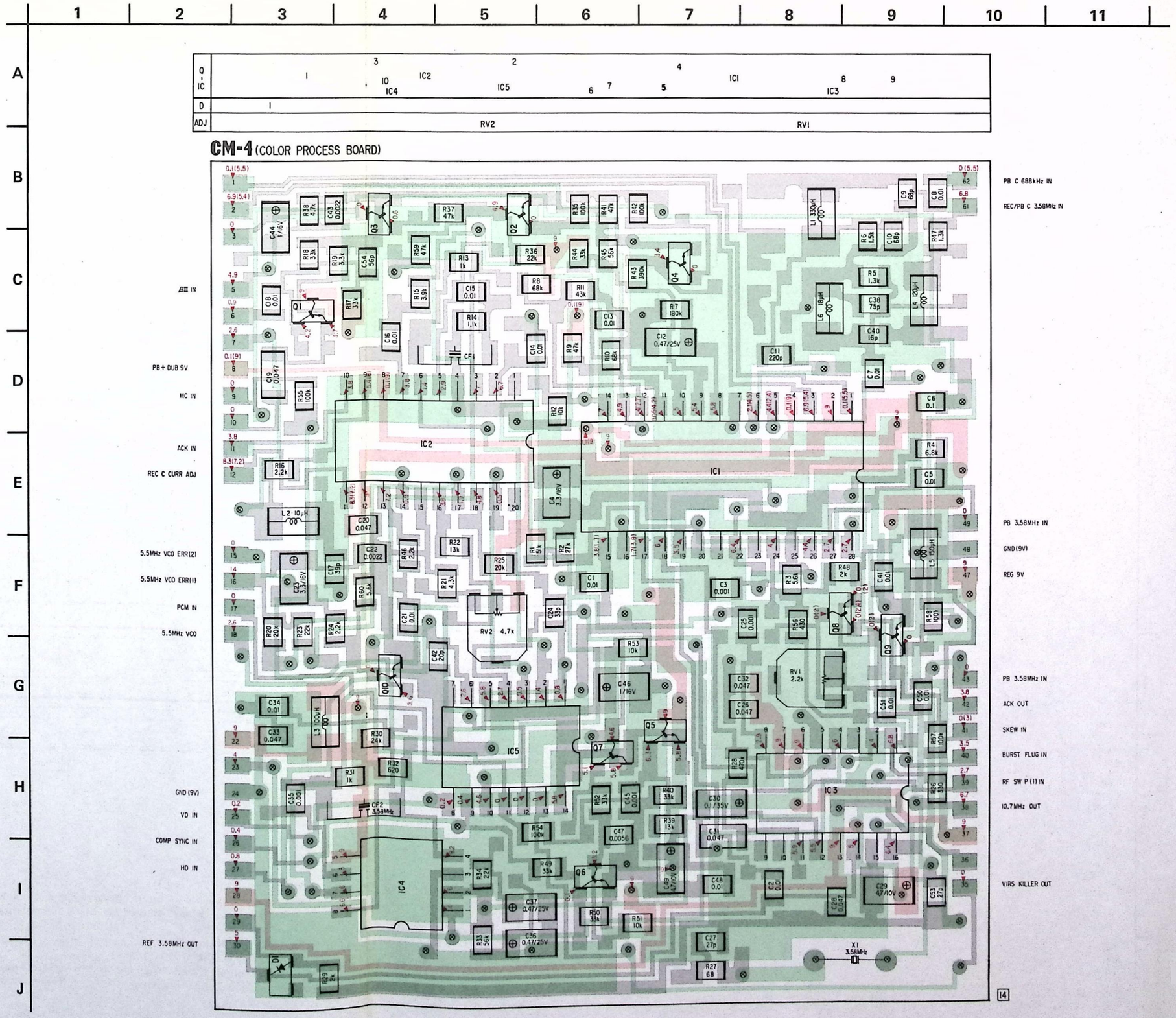

Note:
- ⊗ : Through hole.
- : component-side pattern.
- : B + pattern

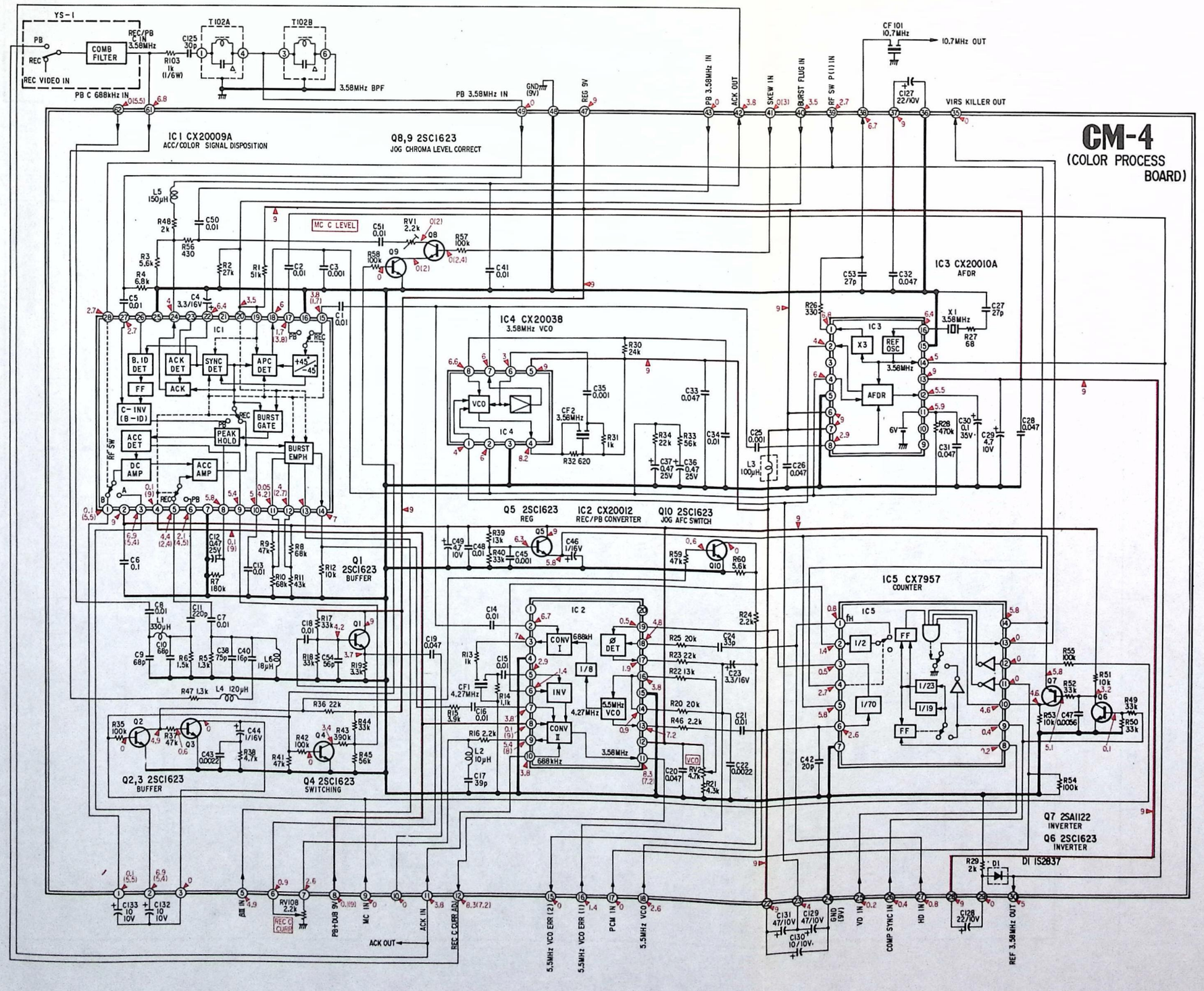

Note:

- All capacitors are in μF unless otherwise noted. pF: μμF 50WV or less are not indicated except for electrolytics and tantalums.
- All resistors are in ohms, 1/10 W unless otherwise noted. kΩ: 1000 Ω, MΩ: 1000 kΩ
- All variable and semi-fixed resistors have characteristic curve B, unless otherwise noted.
- ▭ : adjustment for repair.
- ▬ : B+ bus.
- The voltage value is a reference value between the grounding when the color bar signal is received from a color bar generator.
- The voltage value is measured using a digital tester (10 MΩ).
  no mark: βIII REC mode
  ( ) : βIII PB mode

AD-9 [AUDIO]

	1	2	3	4	5	6	7	8	9	10	11
A	Q, IC	4		IC1 10				11 8	7	6 3	9 1 2
B	D	2						1		3	

AD-9 (AUDIO BOARD)

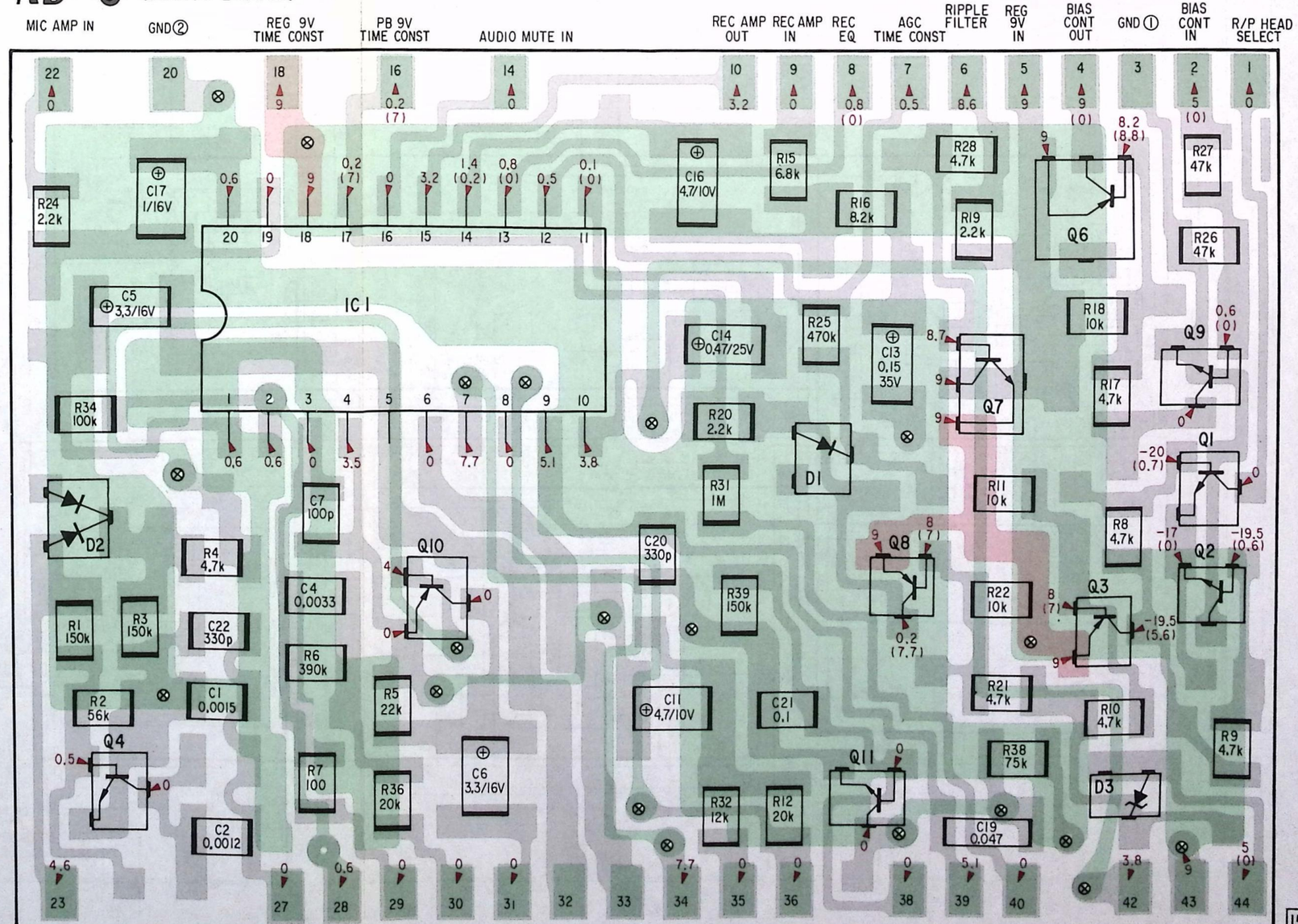

- ⊗ : Through hole.
- : component-side pattern.
- : B + pattern

AD-9 (AUDIO BOARD)

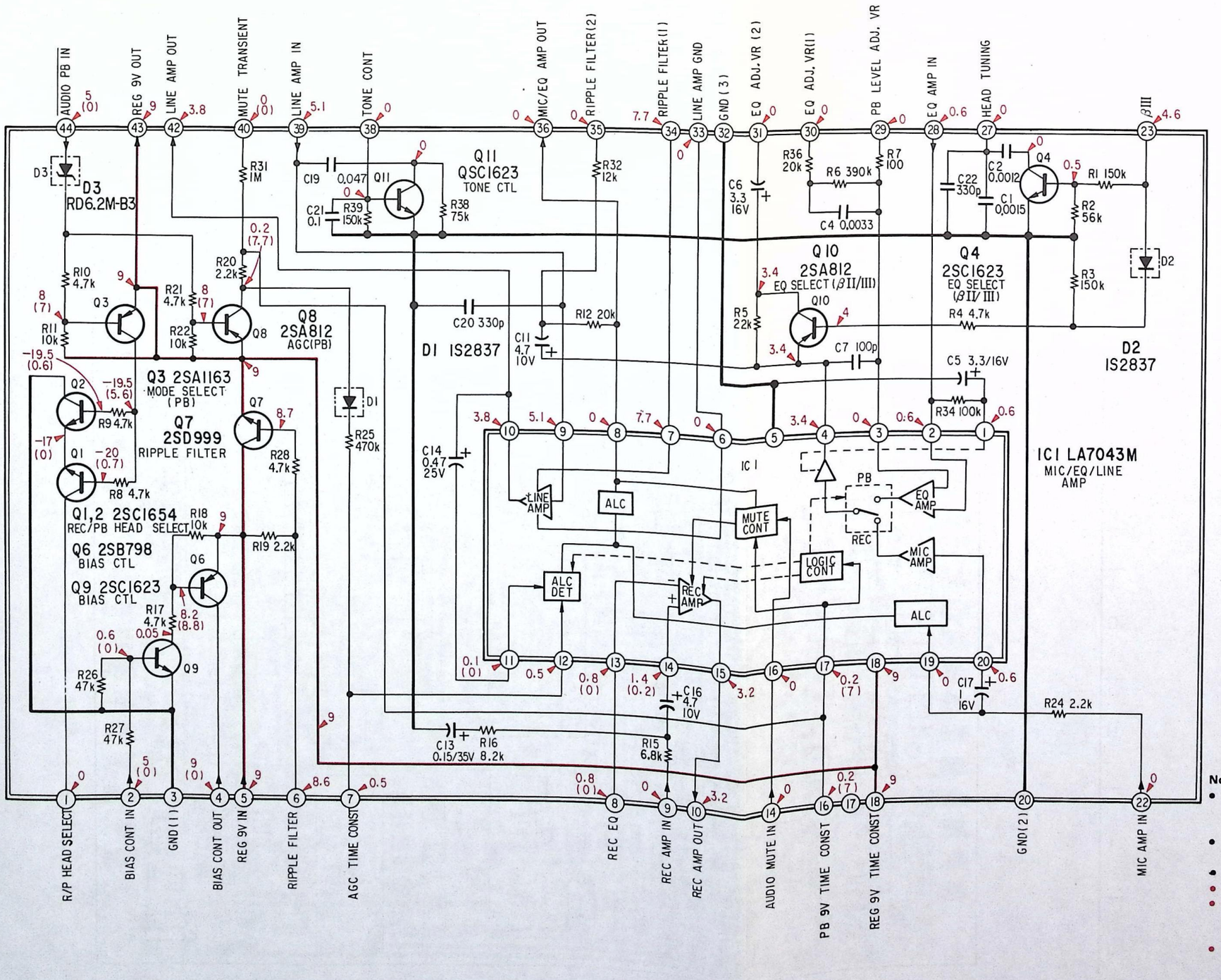

Note:

- All capacitors are in μF unless otherwise noted. pF: μμF 50WV or less are not indicated except for electrolytics and tantalums.
- All resistors are in ohms, 1/10 W unless otherwise noted. kΩ: 1000 Ω, MΩ: 1000 kΩ
- ⏦ : fusible resistor.
- ▬ : B+ bus.
- The voltage value is a reference value between the grounding when the color bar signal is received from a color bar generator.
- The voltage value is measured using a digital tester (10 MΩ).
  no mark: βIII REC mode
  ( ) : βIII PB mode

SV-11

[SERVO•MAIN]

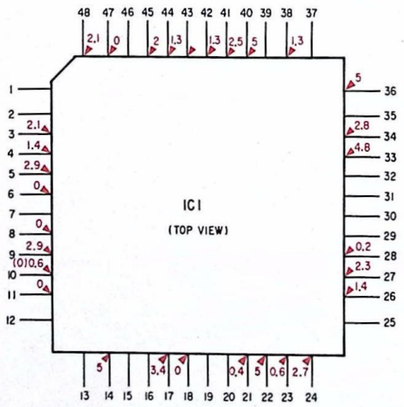

- ● ⊗ : Through hole.
- ● : component-side pattern.
- ● : B + pattern

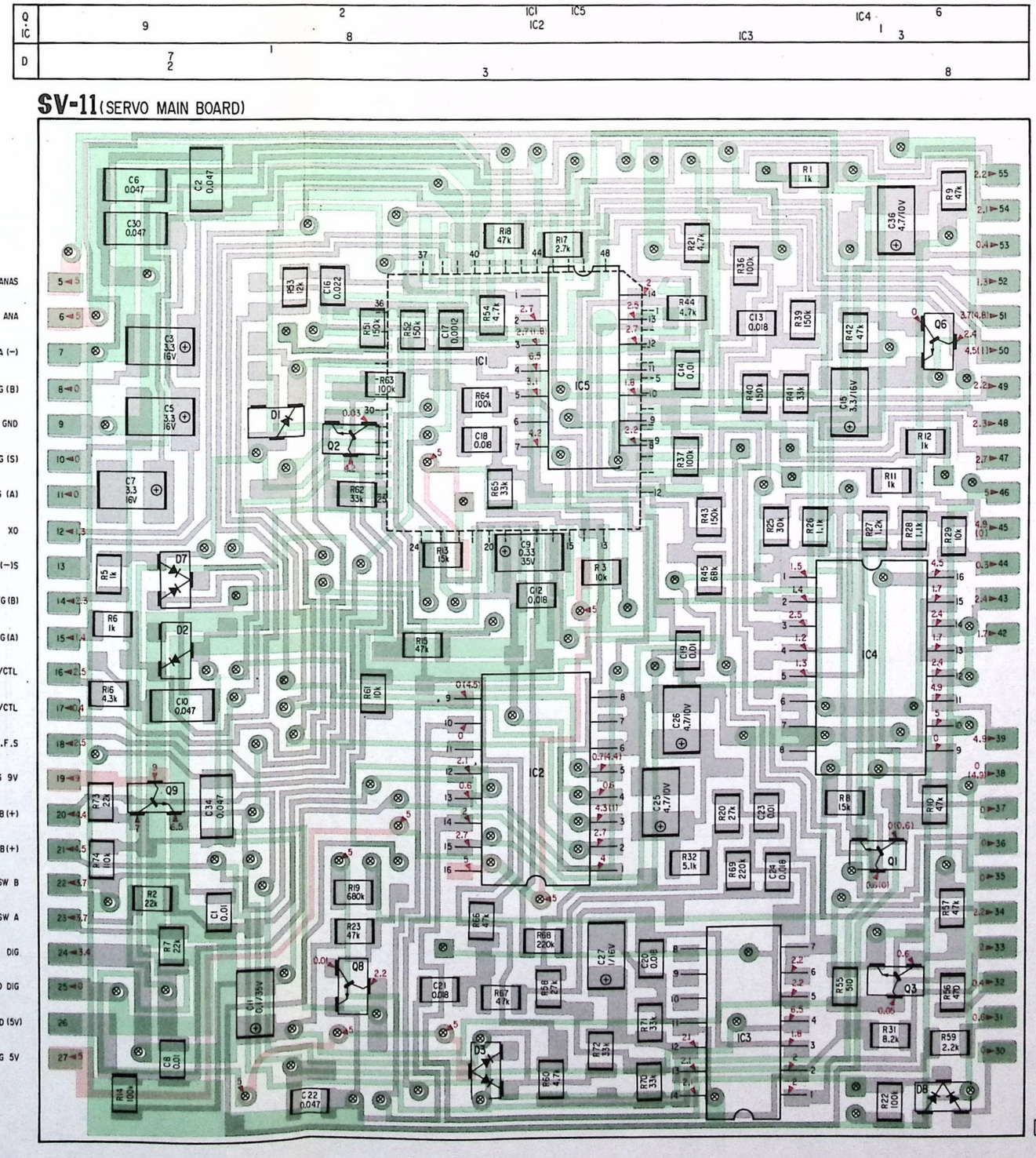

SV-11

[SERVO·MAIN]

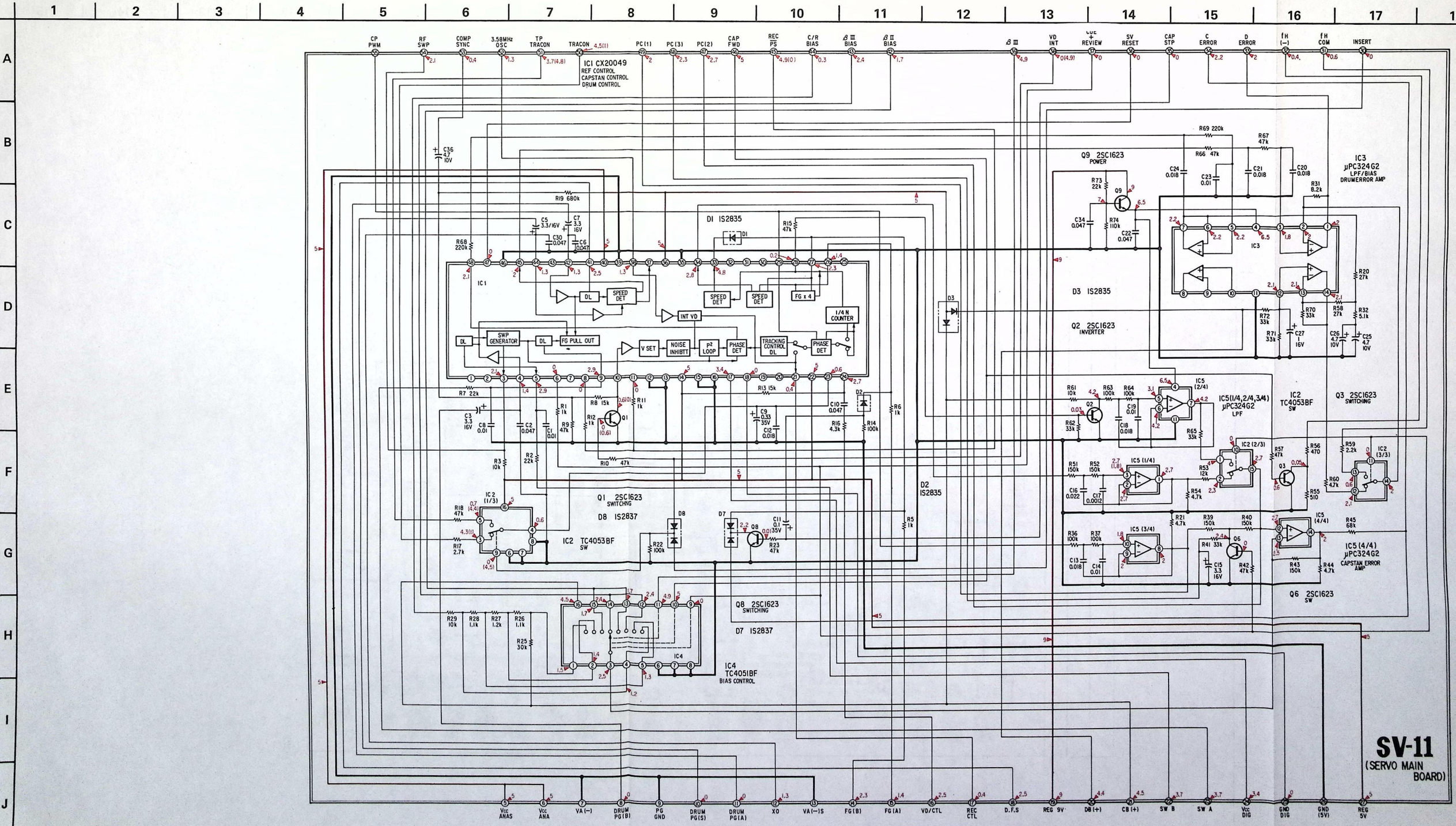

SV-11
(SERVO MAIN BOARD)

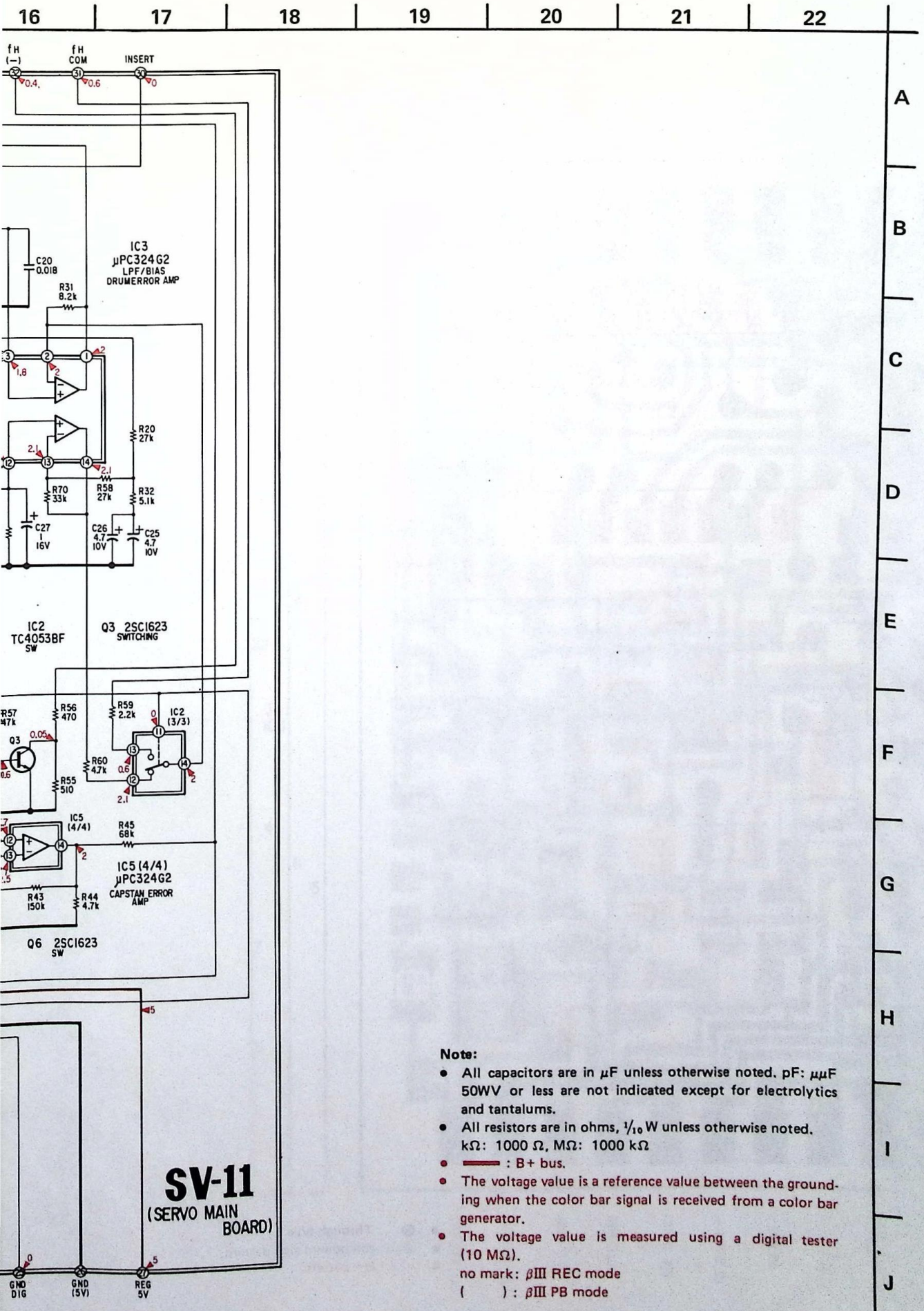

Note:

- All capacitors are in μF unless otherwise noted. pF: μμF 50WV or less are not indicated except for electrolytics and tantalums.
- All resistors are in ohms, 1/10 W unless otherwise noted. kΩ: 1000 Ω, MΩ: 1000 kΩ
- ▬▬ : B+ bus.
- The voltage value is a reference value between the grounding when the color bar signal is received from a color bar generator.
- The voltage value is measured using a digital tester (10 MΩ).
  no mark: βIII REC mode
  ( ) : βIII PB mode

SP-1 [FG/CTL]

SP-1 (FG/CTL BOARD)

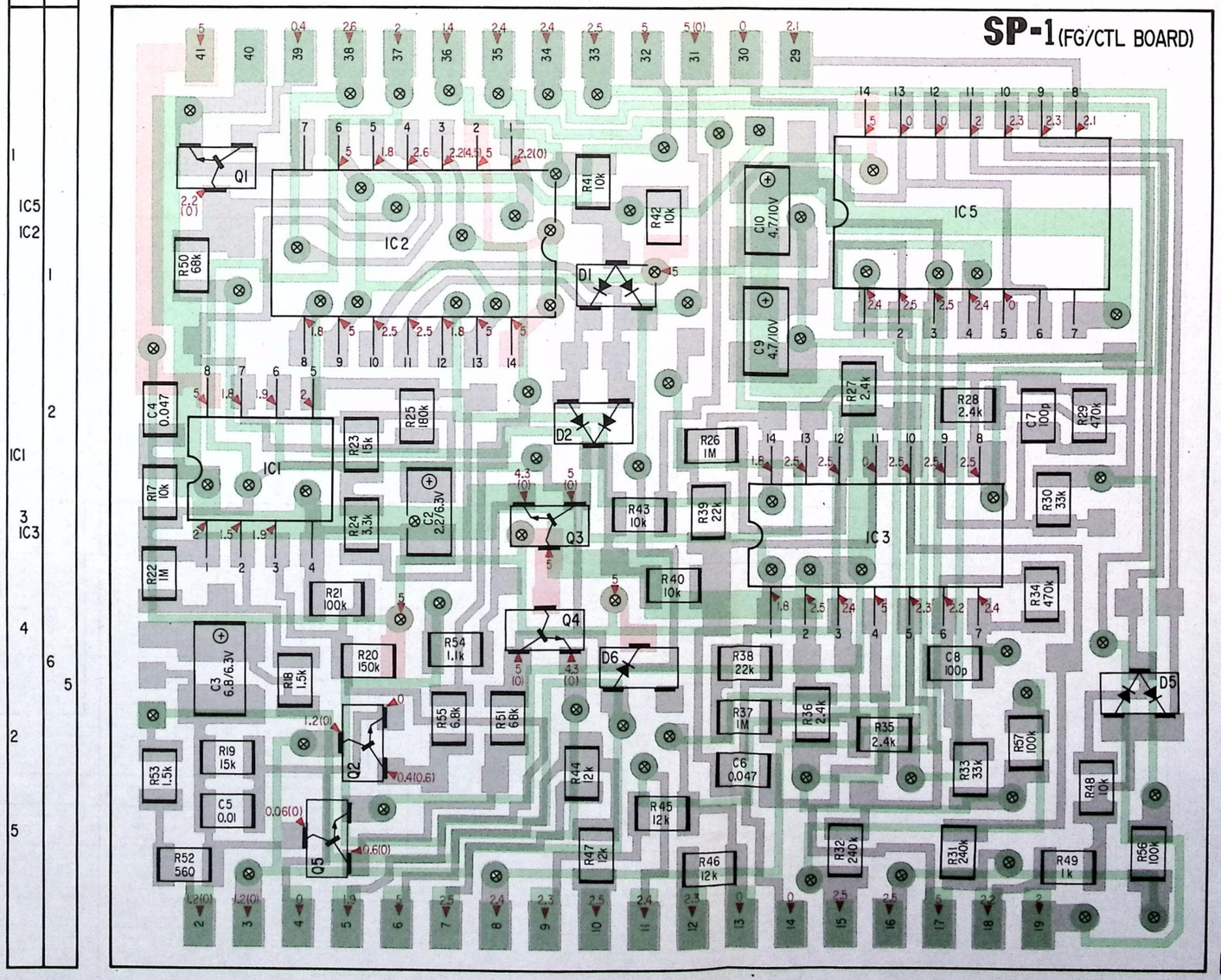

Q,IC	D
IC5	1
IC2	
IC1	2
IC3	3
	4
	6
	5
	2
	5

- ● ⊗ : Through hole.
- ▒ : component-side pattern.
- ▒ : B + pattern

SP-1 [FG/CTL]

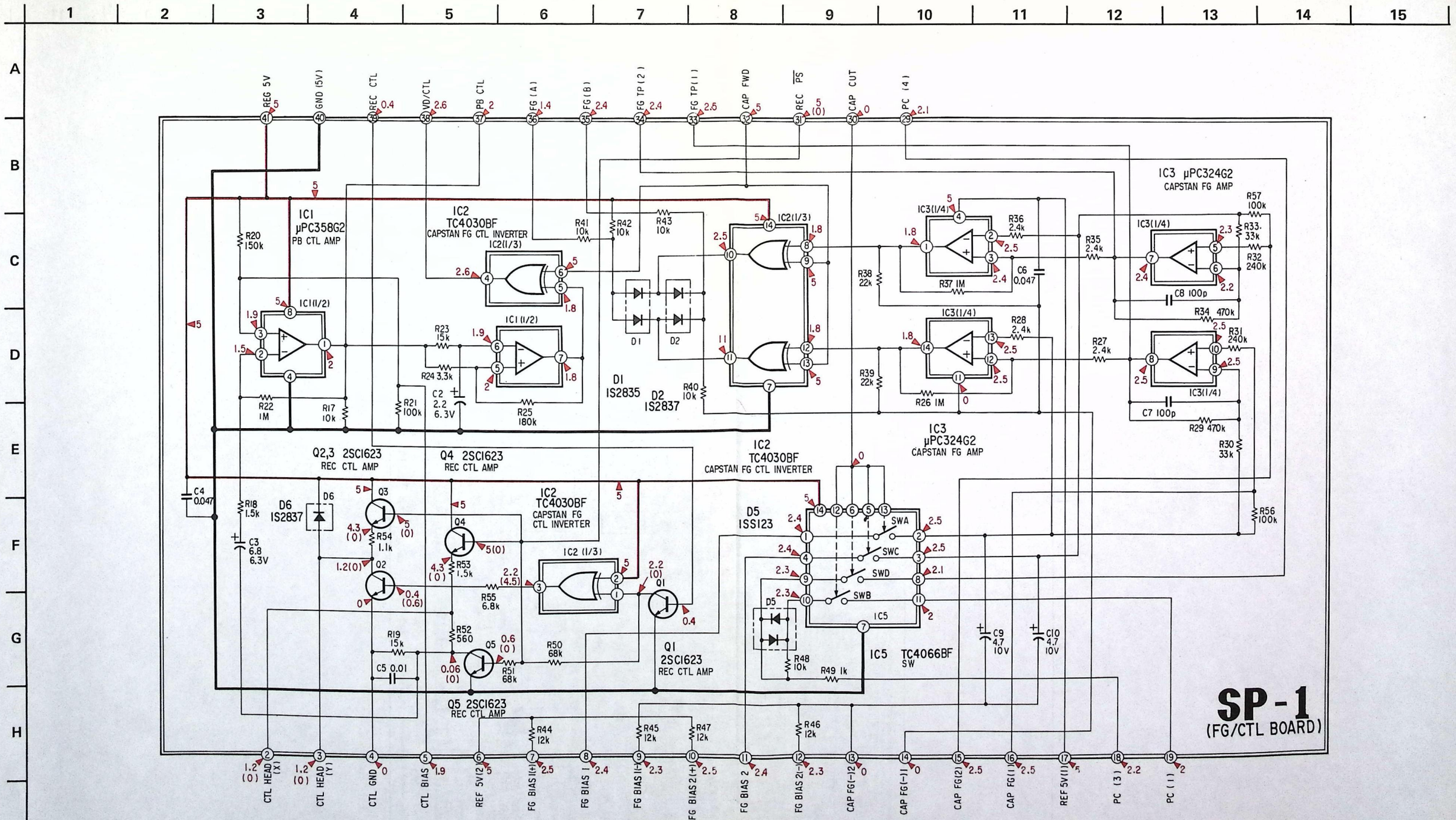

Note:

- All capacitors are in µF unless otherwise noted. pF: µµF 50WV or less are not indicated except for electrolytics and tantalums.
- All resistors are in ohms, 1/10 W unless otherwise noted. kΩ: 1000 Ω, MΩ: 1000 kΩ
- ▬▬ : B+ bus.
- The voltage value is a reference value between the grounding when the color bar signal is received from a color bar generator.
- The voltage value is measured using a digital tester (10 MΩ).
  no mark: βIII REC mode
  ( ) : βIII PB mode

SD-1 [SERVO·PREDRIVE]

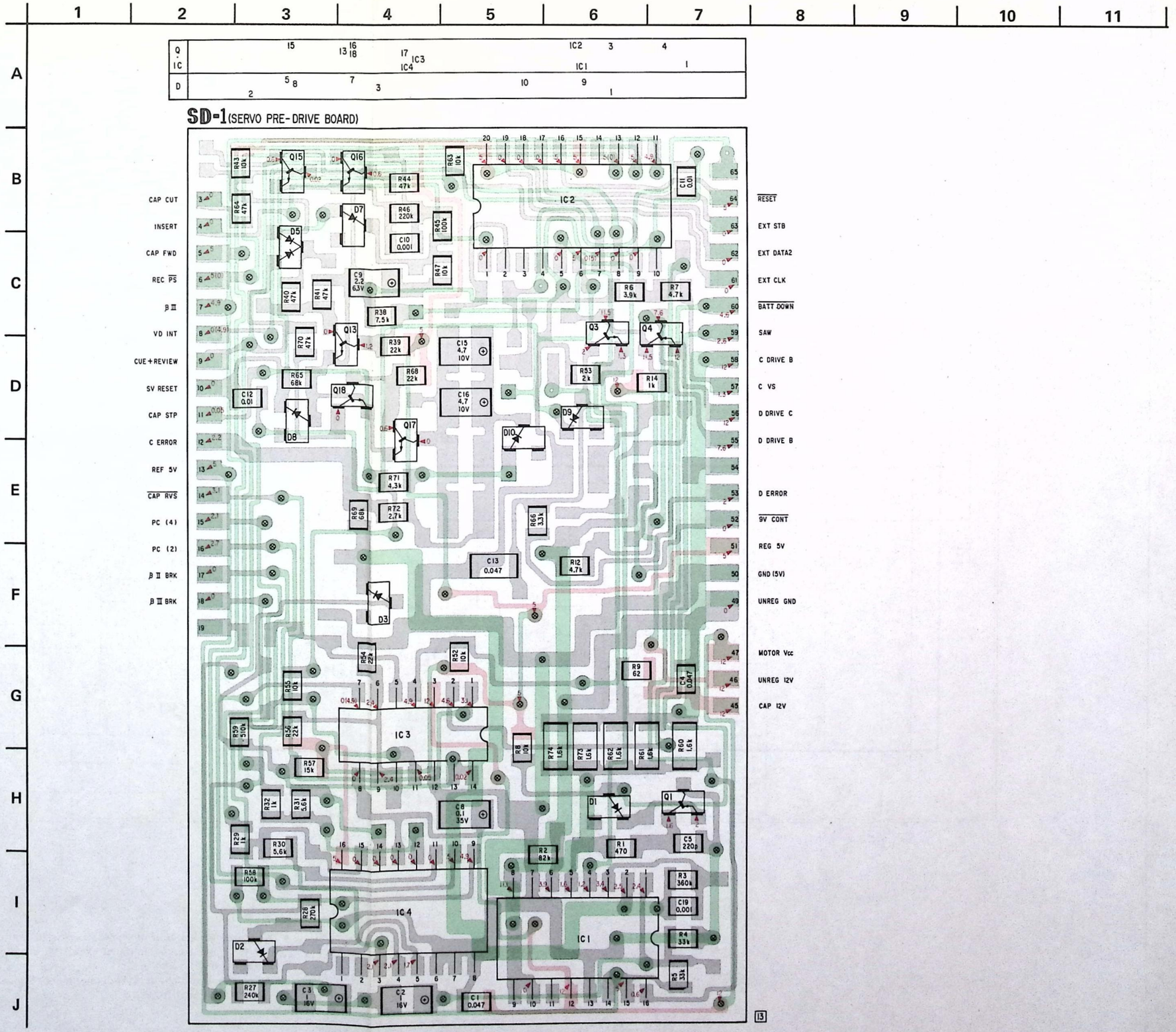

Note:

- ⊗ : Through hole.
- : component-side pattern.
- : B + pattern

SD-1

[SERVO·PREDRIVE]

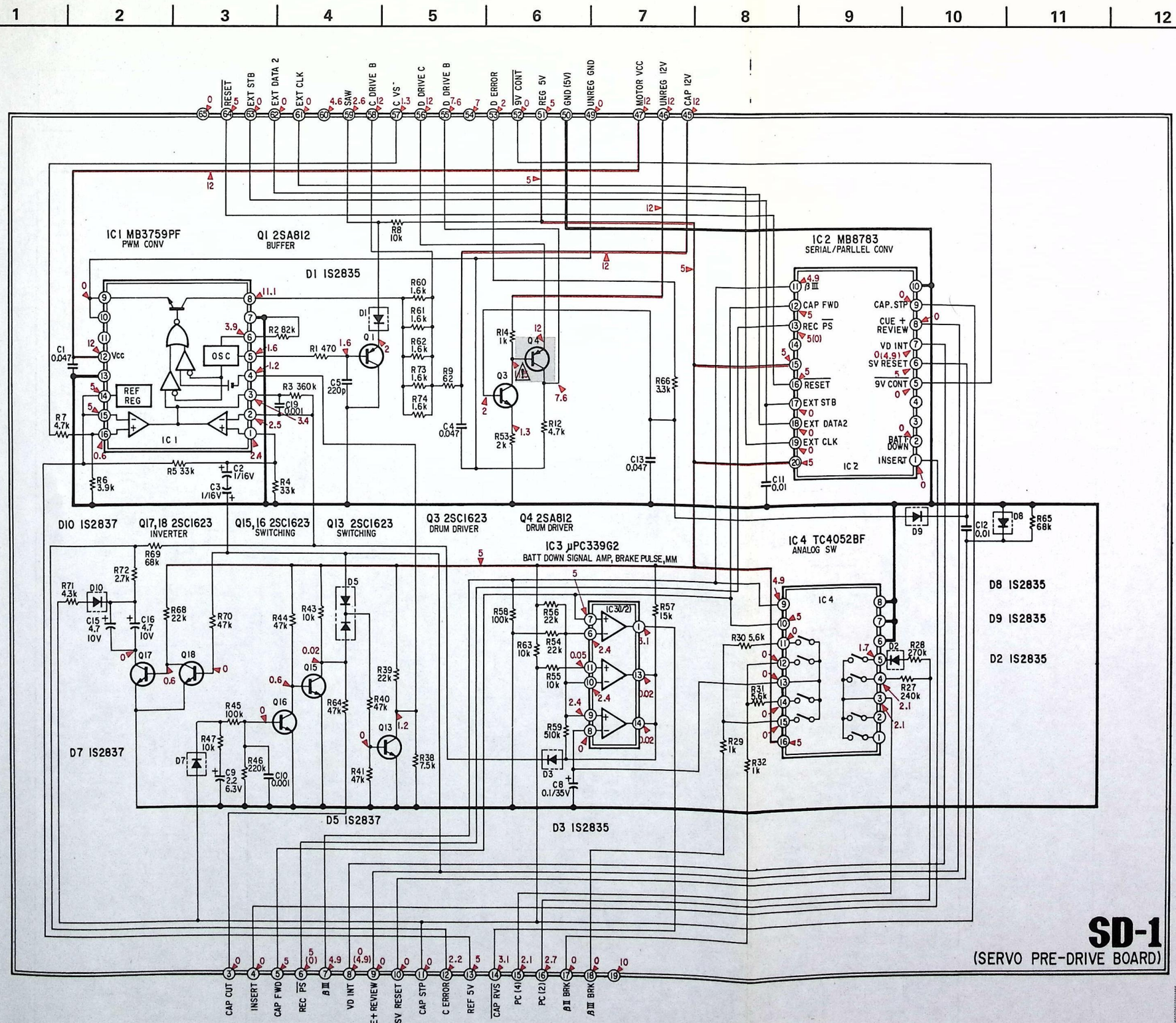

SD-1
(SERVO PRE-DRIVE BOARD)

Note:

- All capacitors are in μF unless otherwise noted. pF: μμF 50WV or less are not indicated except for electrolytics and tantalums.
- All resistors are in ohms, 1/10 W unless otherwise noted. kΩ: 1000 Ω, MΩ: 1000 kΩ
- ——— : B+ bus.
- The voltage value is a reference value between the grounding when the color bar signal is received from a color bar generator.
- The voltage value is measured using a digital tester (10 MΩ).
  no mark: βIII REC mode
  ( ) : βIII PB mode

Note: The components identified by shading and mark ⚠ are critical for safety. Replace only with part number specified.

RM-9 [REEL MAIN]

RM-9 (REEL MAIN BOARD)

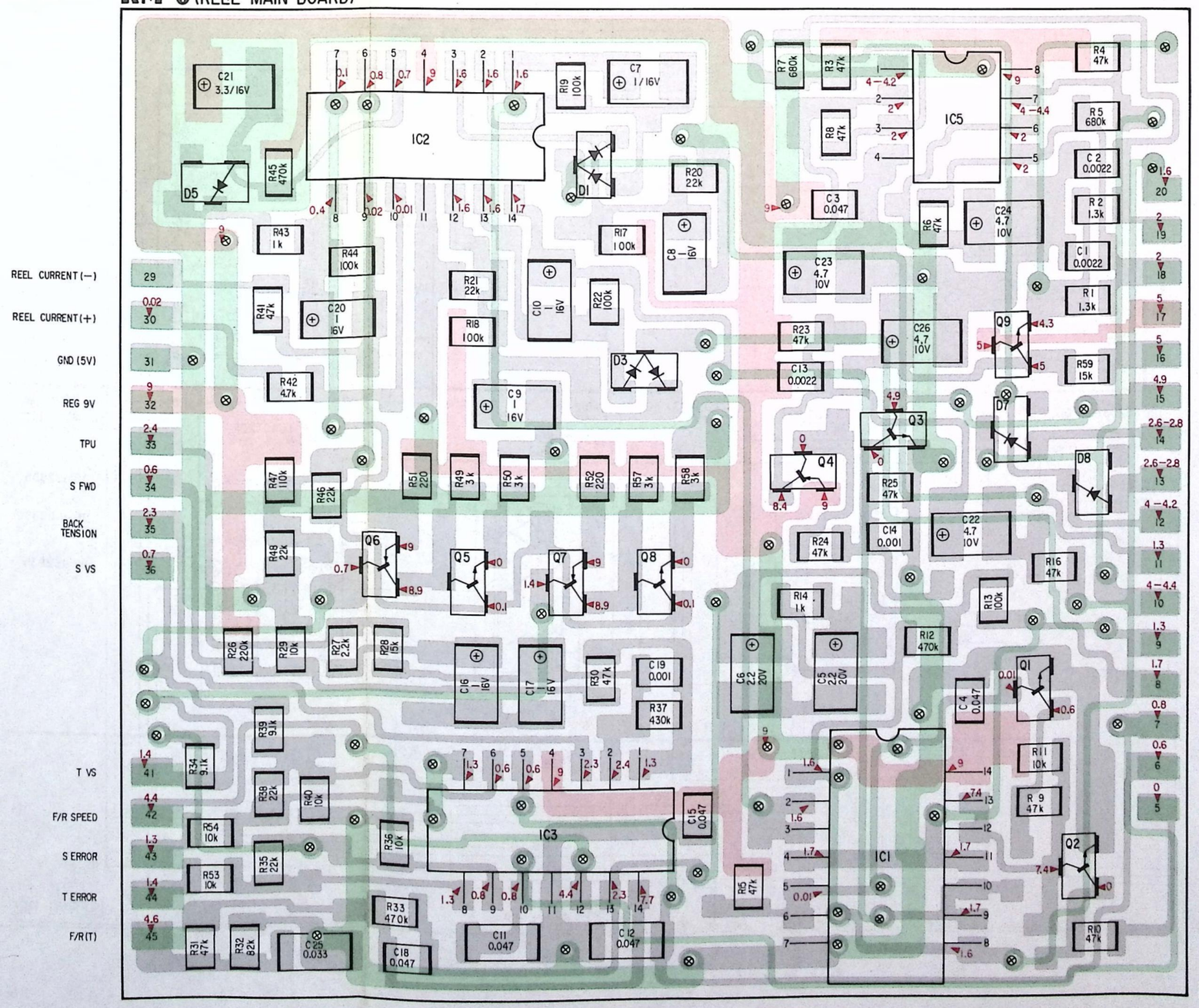

● ⊗ : Through hole.
● : component-side pattern.
● : B + pattern

RM-9 [REEL MAIN]

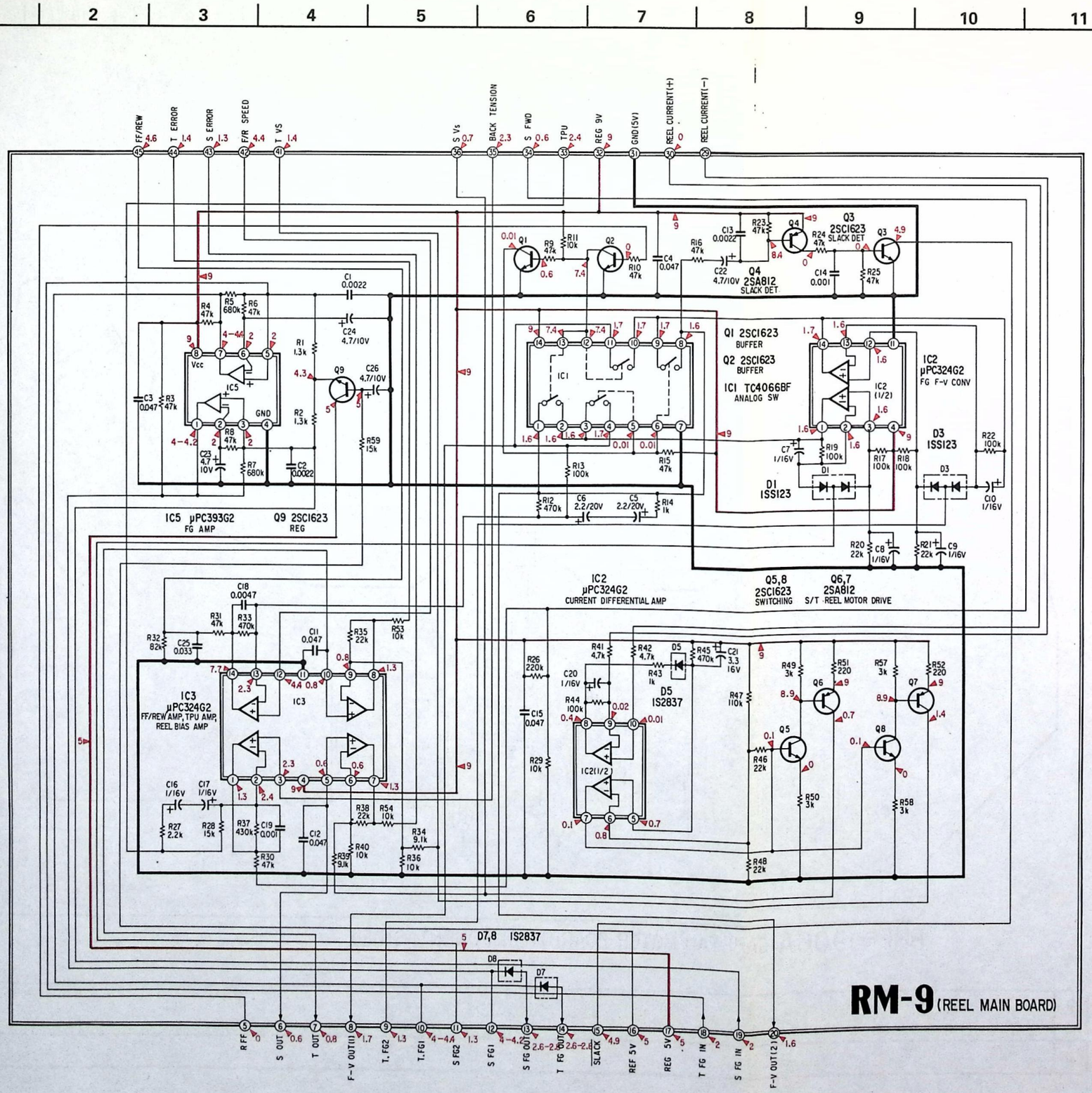

Note:

- All capacitors are in μF unless otherwise noted. pF: μμF 50WV or less are not indicated except for electrolytics and tantalums.
- All resistors are in ohms, 1/10 W unless otherwise noted. kΩ: 1000 Ω, MΩ: 1000 kΩ
- ▬▬ : B+ bus.
- The voltage value is a reference value between the grounding when the color bar signal is received from a color bar generator.
- The voltage value is measured using a digital tester (10 MΩ).
  no mark: βIII REC mode
  ( ) : βIII PB mode

CAPSTAN MOTOR

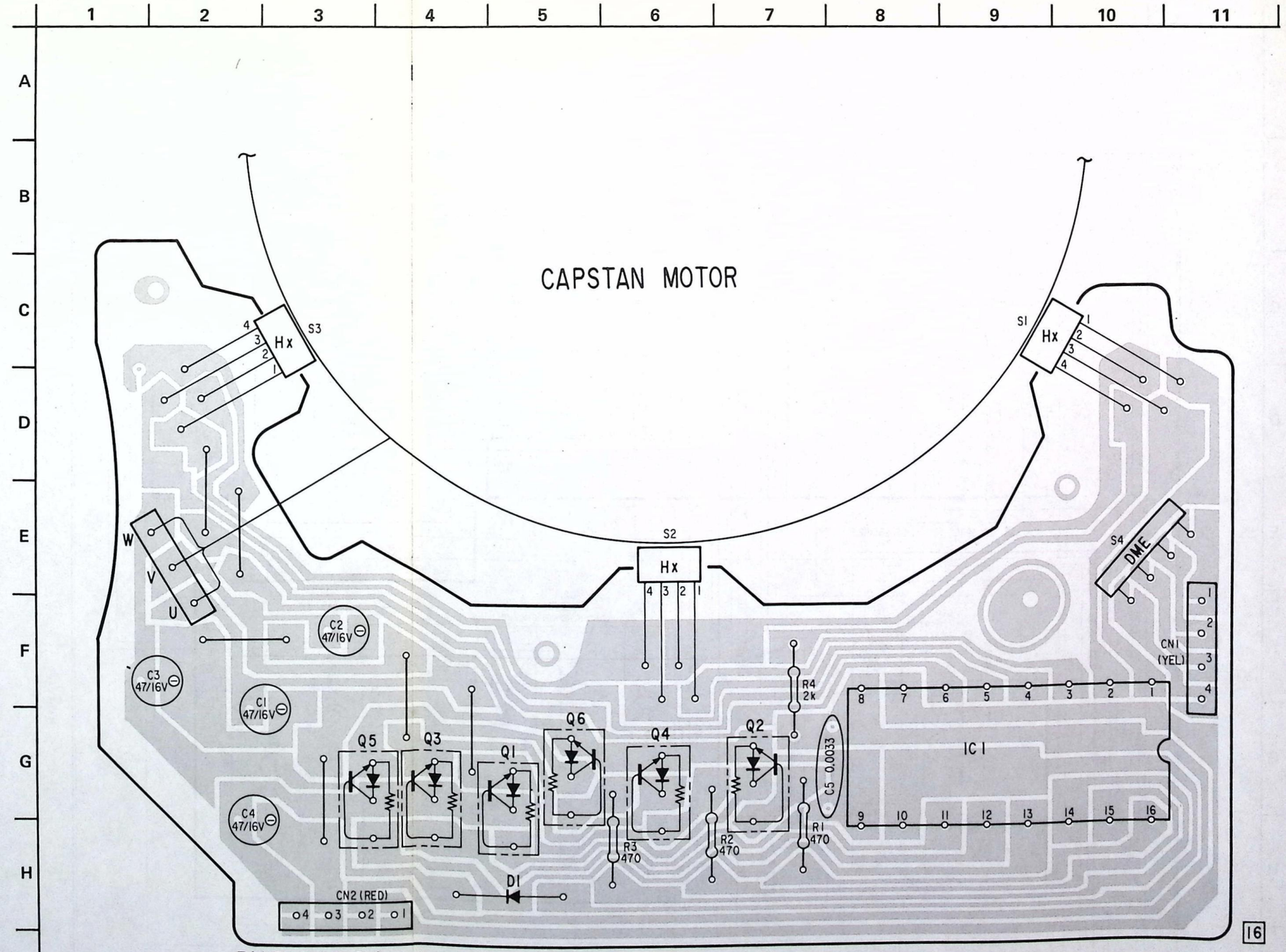

BHF-1906A (CAPSTAN MOTOR BOARD) (COMPONENT SIDE)

Q IC	5	3	1	6	4	2	IC1
D			1				

CAPSTAN MOTOR

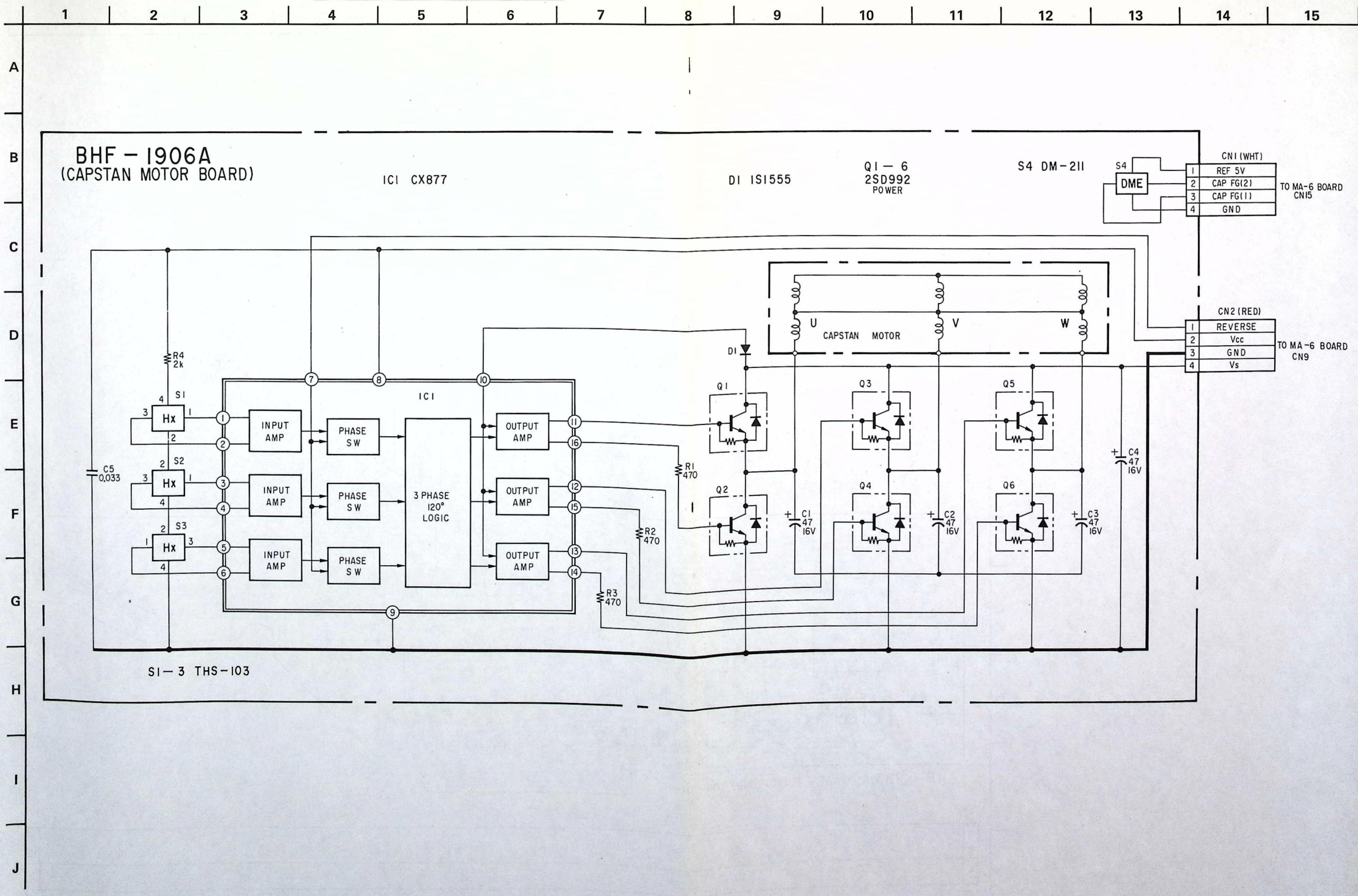

REEL MOTOR

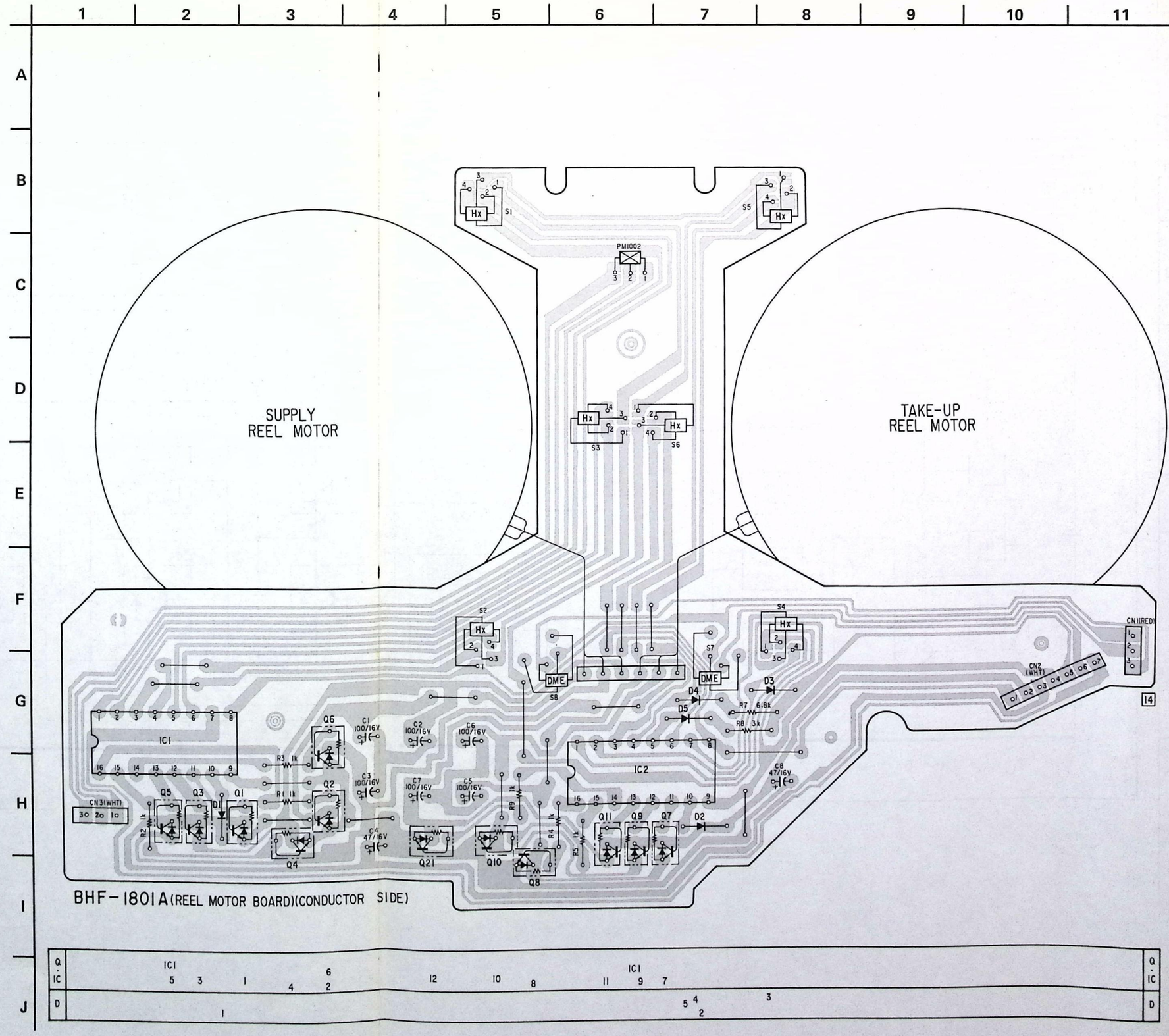

BHF-1801A(REEL MOTOR BOARD)(CONDUCTOR SIDE)

REEL MOTOR

BHF-1801A (REEL MOTOR BOARD)

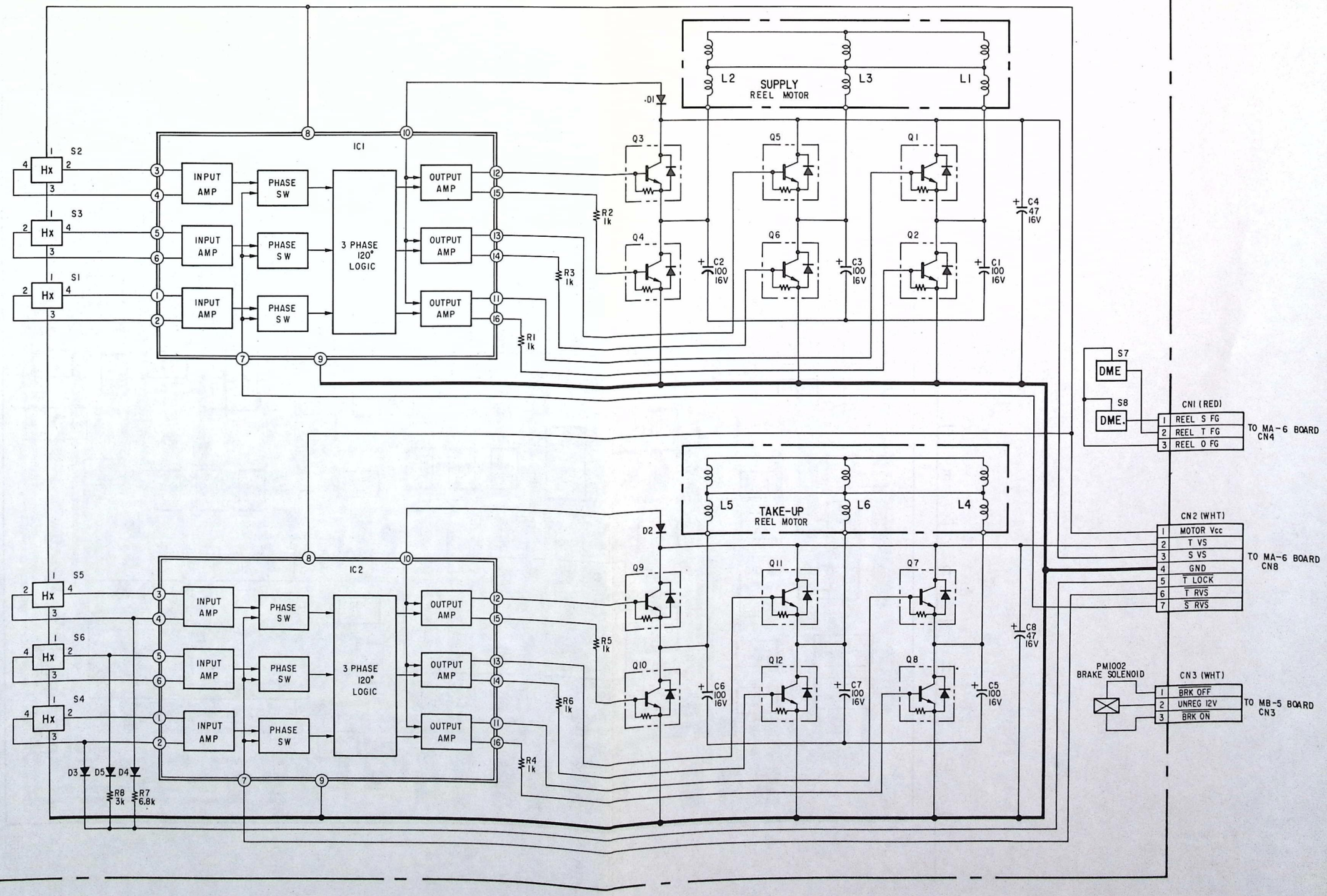

RS-1 [REEL CONTROL]

RS-1 (REEL CONTROL BOARD)

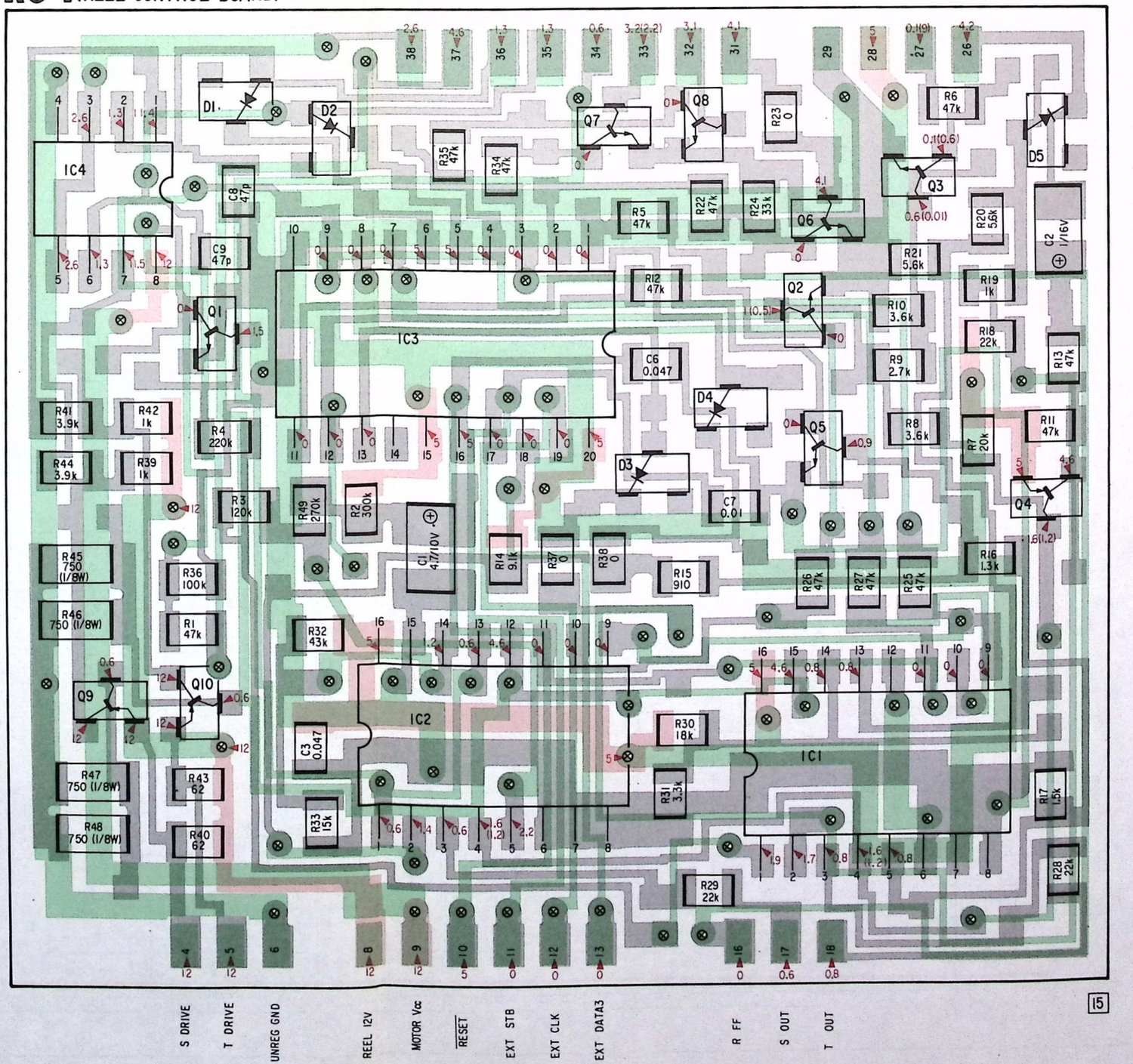

Q, IC	D
	1
7,8	2,5
3	
IC4	
6	
2	
1, IC3	
	4
5	
	3
4	
9,10	
IC2	
IC1	

Note:
- ⊗ : Through hole.
- : component-side pattern.
- : B + pattern

RS-1 [REEL CONTROL]

RS-1
(REEL CONTROL BOARD)

Q1 2SC1623 VOLTAGE SW
Q2 2SC1623 VOLTAGE SW
Q3 2SC1623 VOLTAGE SW
Q4 2SA812 VOLTAGE SW
Q5 2SC1623 VOLTAGE SW
D5 1S2835
Q6 2SC1623 T REEL LOCK

IC1 TC4051BF ANALOG SW
IC2 TC4051BP ANALOG SW
IC3 MB8783 SERIAL/PARALLEL CONV
IC4 μPC393G2 PWM

D1 1S2837
D2 1S2837
D3,4 1S2835

Q7 2SC1623 S/T REEL
Q8 2SC1623 FF/REW DRIVE
Q9 2SA812 S REEL DRIVE
Q10 2SA812 T REEL DRIVE

S DRIVE
T DRIVE
UNREG GND
REEL 12V
MOTOR Vcc
RESET
EXT STB
EXT CLK
EXT DATA3
R FF
S OUT
T OUT

SAW
F/R(T)
T ERROR
S ERROR
S FWD
S RVS
T RVS
T LOCK
GND (5V)
REG 5V
PB+DUB 9V
TAPE END

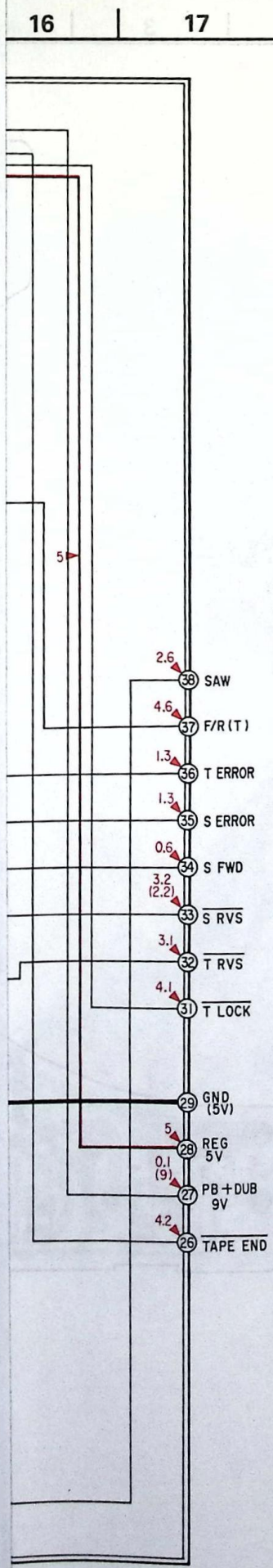

IC1, 2 Internal switch change

REEL COM (SWITCH CHANGE PIN)			ON CH	MODE
A	B	C	PIN	
L	L	L	0	REC, PB, PAUSE, INSERT
H	L	L	1	REVERSE
L	H	L	2	FF
H	H	L	3	REW
L	L	H	4	CUE
H	L	H	5	REV
L	H	H	6	LOAD/UNLOAD
H	H	H	7	DONE/STOP

Note:

- All capacitors are in μF unless otherwise noted. pF: μμF 50WV or less are not indicated except for electrolytics and tantalums.
- All resistors are in ohms, 1/10 W unless otherwise noted. kΩ: 1000 Ω, MΩ: 1000 kΩ
- ▬▬ : B+ bus.
- The voltage value is a reference value between the grounding when the color bar signal is received from a color bar generator.
- The voltage value is measured using a digital tester (10 MΩ).
  no mark: βIII REC mode
  ( ) : βIII PB mode

MB-5 [LOADING MOTOR/PLUNGER DRIVE] **LM-11** [LOADING MOTOR]

MB-5

(LOADING MOTOR/ PLUNGER DRIVE BOARD)
(CONDUCTOR SIDE)

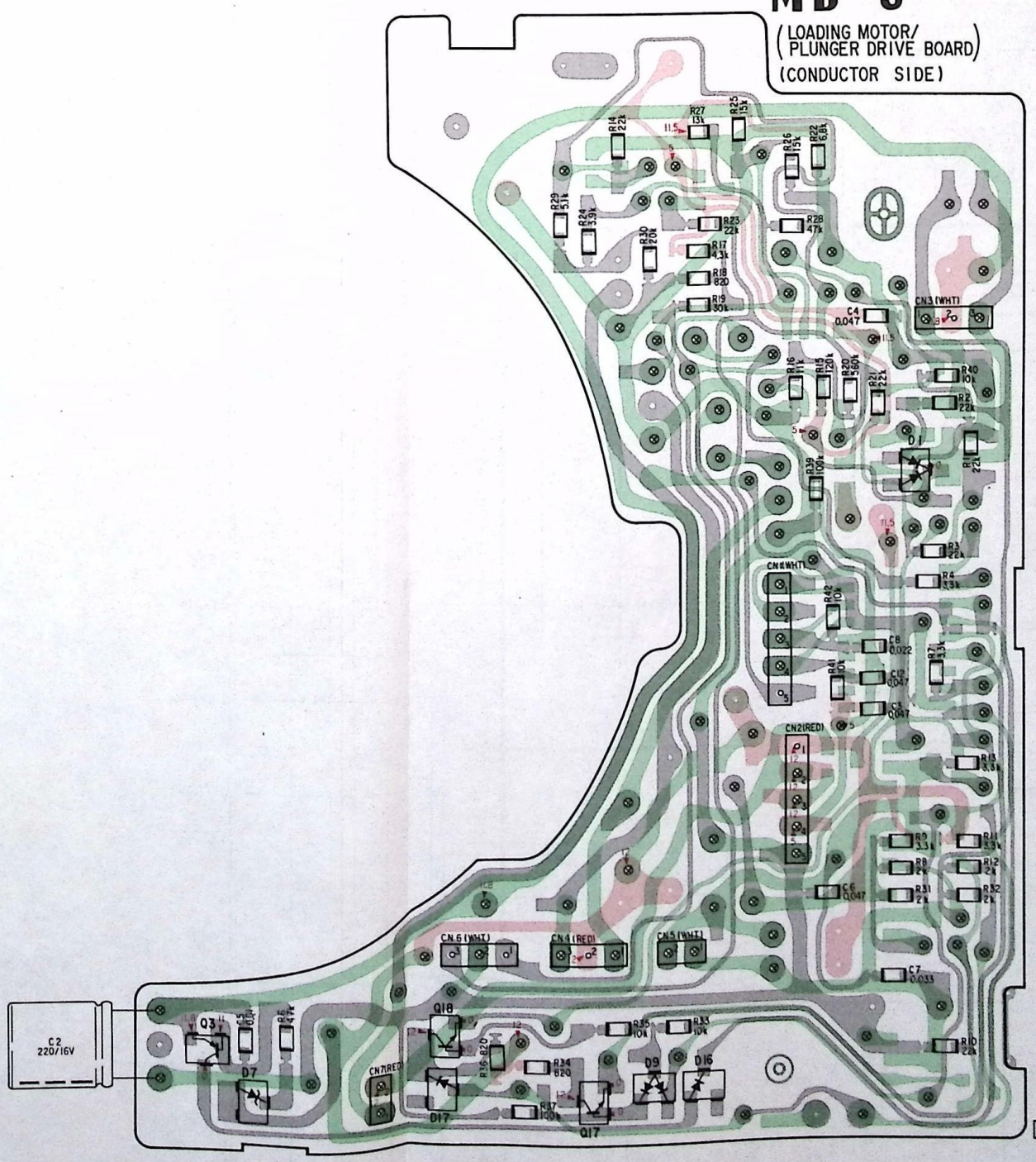

Q, IC	D
13 18	
17	7 17 9,16
16	

Note:
- ● ▲ : nonflammable resistor.
- ● Ⓕ : fusible resistor.
- ● ⊗ : Through hole.
- ● : component-side pattern.
- ● : B + pattern

10 11 12 13 14 15 16 17 18 19

Q, IC	D
12	
13	
	2,3
14	
2 IC2	
16 4	
1,15	
5	
IC1	
11,9	14
	4,5
7	8 13
	6
6	
	12
	10
	11
8	
10	

MB-5

(LOADING MOTOR/
PLUNGER DRIVE BOARD)

(COMPONENT SIDE)

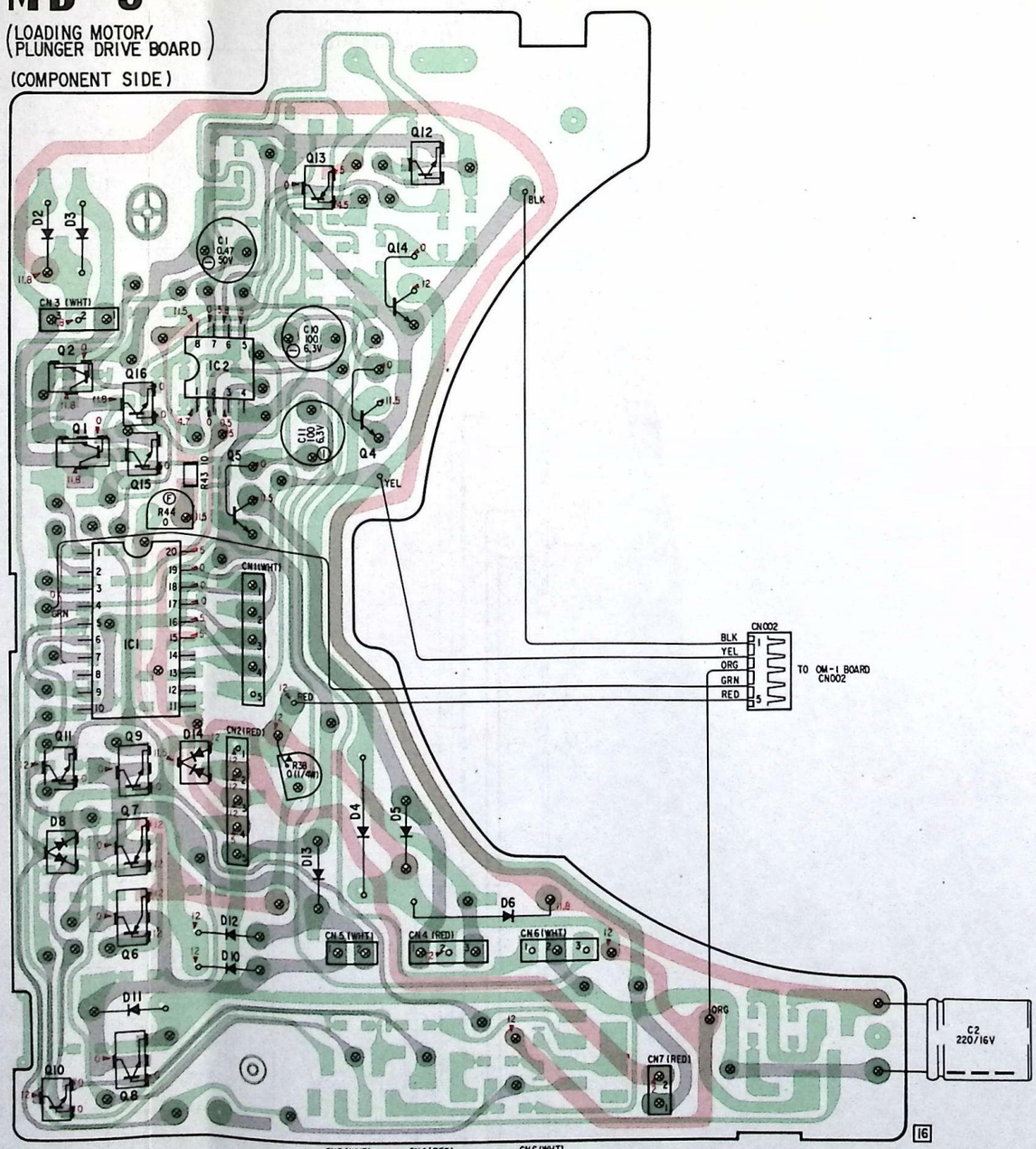

LM-11

(LOADING MOTOR BOARD)
(CONDUCTOR SIDE)

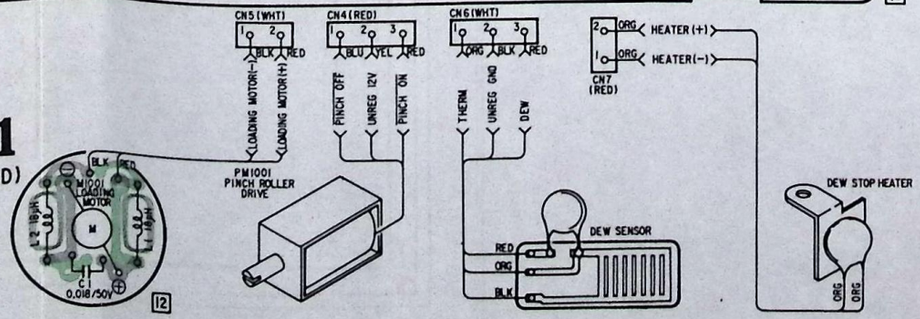

MB-5 [LOADING MOTOR/PLUNGER DRIVE] LM-11 [LOADING MOTOR]

MB – 5 (LOADING MOTOR/PLUNGER DRIVE BOARD)

IC1 MB8783 MOTOR, SOLENOID CONTROL

D1 IS2837

Q5,6 2SC1623 BRAKE DRIVE

D6 10E2 D7 RD3.0MB1

D2,3 ISS119

Q1 2SD999 BRAKE DRIVE

Q2 2SD999 BRAKE DRIVE

D16 IS2837

Q3 2SA812 SWITCHING

D4 10E2

D5 ISS119

Q4,5 2SD1164 PINCH ROLLER DRIVE

D10,12 ISS119

D9 IS2835

D17 IS2835

D8 IS2835

Q6,7 2SB798 LOADING MOTOR DRIVE

D11,13 ISS119

Q10,17 2SC1623 LOADING MOTOR DRIVE

Q8,9 2SD999 LOADING MOTOR DRIVE

Q11,18 2SC1623 LOADING MOTOR DRIVE

D14 IS2837

IC2 μPC393G2 DEW DET TEMP DET

Q13 2SA812 HEATER DRIVE (DEW)

Q12 2SC1623 PRE-HEAT ON/OFF

Q14 2SD1164 HEATER DRIVE

CN1 (WHT, BOARD IN)
- 1 EXT DATA4
- 2 EXT CLK
- 3 EXT STB
- 4 RESET
- 5 DEW SENSE

TO MA-6 BOARD CN5

CN2 (RED, BOARD IN)
- 1 UNREG 12V
- 2 HEATER 12V
- 3 SW'D 12V
- 4 REG 5V
- 5 UNREG GND

TO MA-6 BOARD CN18

CN3 (WHT, BOARD IN)
- 3 BRK ON
- 2 UNREG 12V
- 1 BRK OFF

TO REEL MOTOR BOARD CN3

CN4 (RED)
- 3 PINCH ON
- 2 UNREG 12V
- 1 PINCH OFF

PM1001 PINCH ROLLER PLUNGER

TO OM-1 BOARD CN002
- 5 UNREG 12V
- 4 PINCH OFF
- 3 UNREG 12V
- 2 PINCH OFF
- 1 GND

CN5 (WHT)
- 2 LOAD MOTOR(+)
- 1 LOAD MOTOR(–)

M1001 DNR-6100A LOADING MOTOR

CN6 (WHT)
- 3 DEW
- 2 UNREG GND
- 1 THERM

DEW SENSOR

THERMISTOR

CN7 (RED) DEW STOP HEATER
- 2 HEATER(+)
- 1 HEATER(–)

Note: The components identified by shading and mark ⚠ are critical for safety. Replace only with part number specified.

LM-11 (LOADING MOTOR BOARD)

Note:

- All capacitors are in μF unless otherwise noted. pF: μμF 50WV or less are not indicated except for electrolytics and tantalums.
- All resistors are in ohms, 1/10 W unless otherwise noted. kΩ: 1000 Ω, MΩ: 1000 kΩ
- : nonflammable resistor.
- : fusible resistor.
- : B+ bus.
- The voltage value is a reference value between the grounding when the color bar signal is received from a color bar generator.
- The voltage value is measured using a digital tester (10 MΩ).
  no mark: βIII REC mode
  ( ) : βIII PB mode

PC-5 [POWER CONTROL]

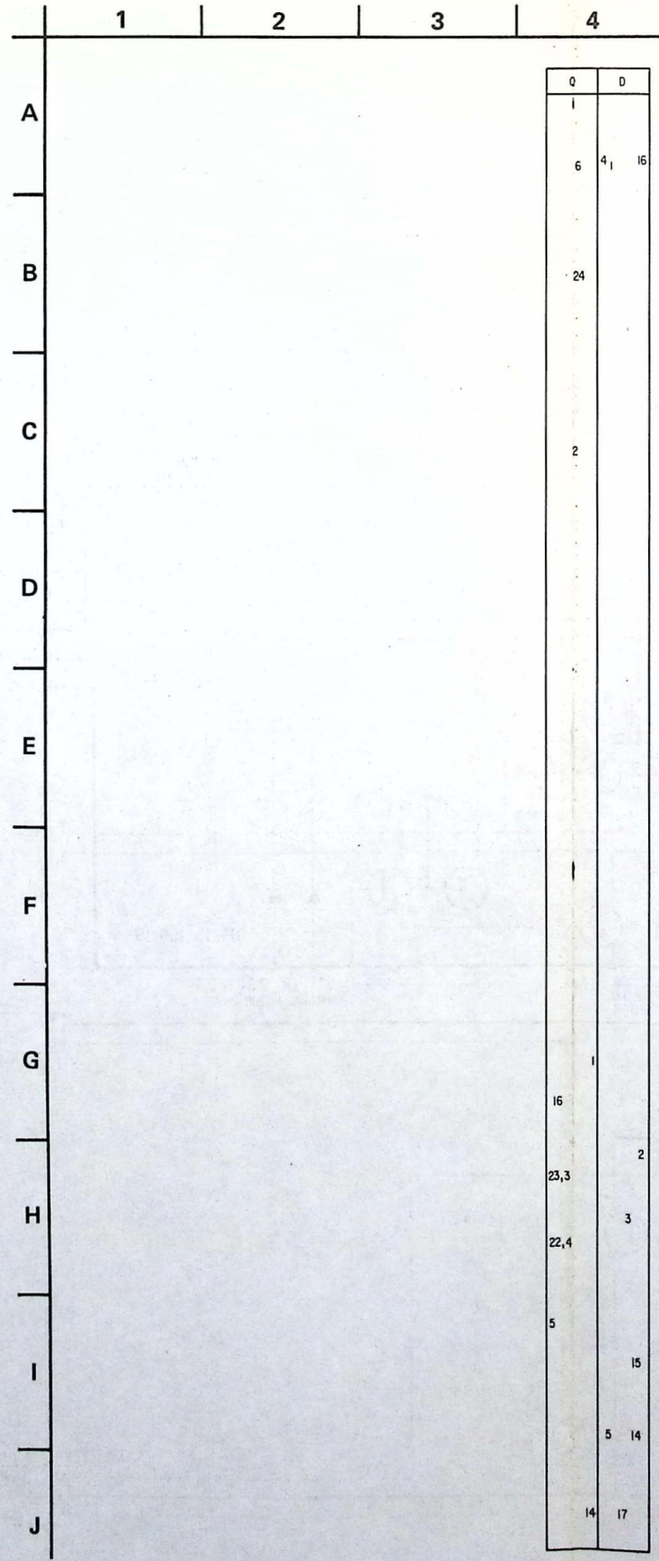

PC-5 (POWER CONTROL BOARD)

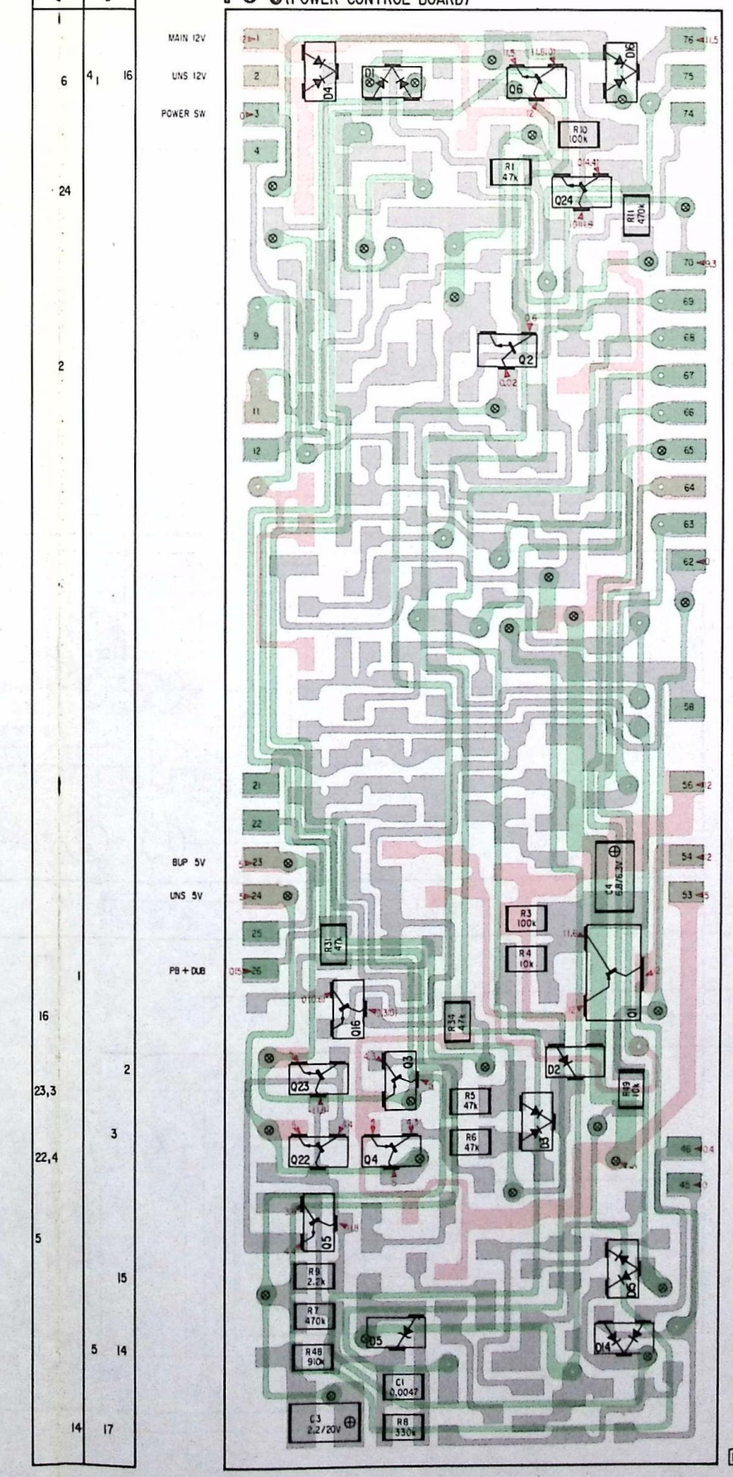

Note:

- ⊗ : Through hole.
- : component-side pattern.
- : B + pattern

PC-5 [POWER CONTROL]

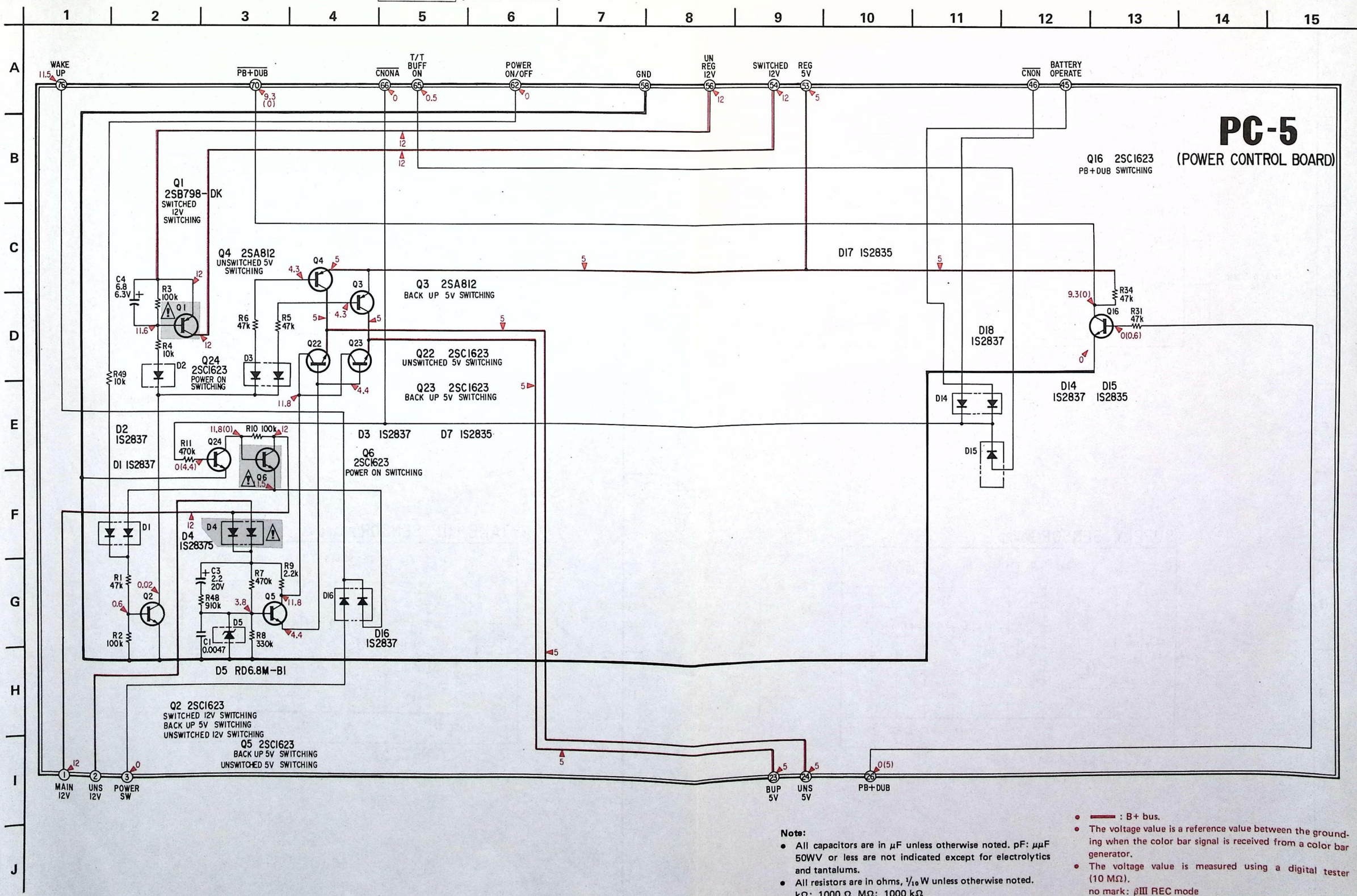

Note:

- All capacitors are in μF unless otherwise noted. pF: μμF 50WV or less are not indicated except for electrolytics and tantalums.
- All resistors are in ohms, 1/10 W unless otherwise noted. kΩ: 1000 Ω, MΩ: 1000 kΩ

- ▬▬ : B+ bus.
- The voltage value is a reference value between the grounding when the color bar signal is received from a color bar generator.
- The voltage value is measured using a digital tester (10 MΩ).
  no mark: βIII REC mode
  ( ) : βIII PB mode

SUPPLY SENSOR

SUPPLY SENSOR BOARD (COMPONENT SIDE)

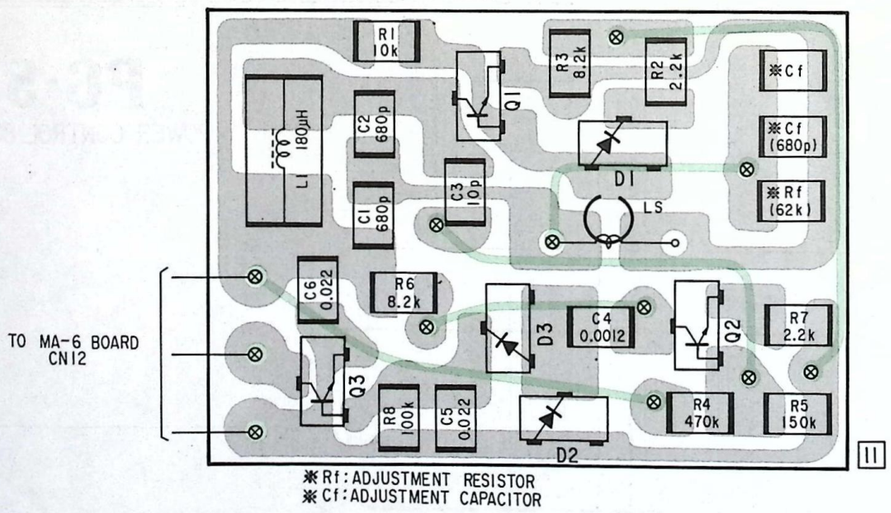

※Rf: ADJUSTMENT RESISTOR
※Cf: ADJUSTMENT CAPACITOR

Note:
- ⊗ : Through hole.
- ▒ : component-side pattern.

SUPPLY SENSOR BOARD

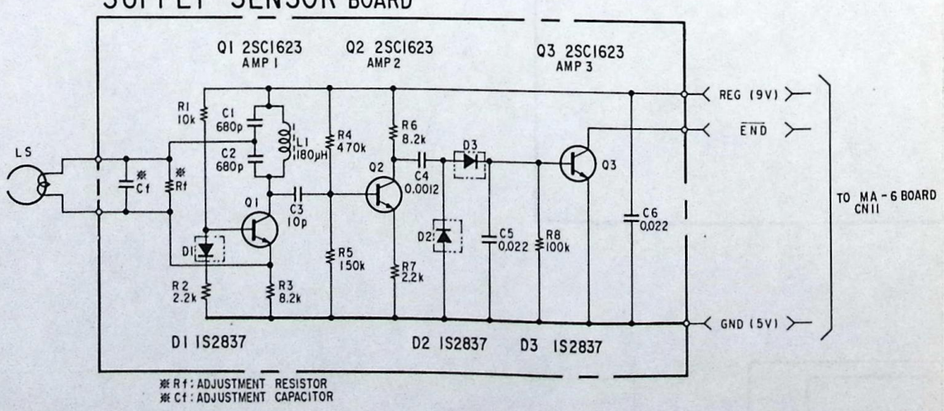

※R1: ADJUSTMENT RESISTOR
※C1: ADJUSTMENT CAPACITOR

TAKE UP SENSOR

TAKE-UP SENSOR BOARD (CONDUCTOR SIDE)

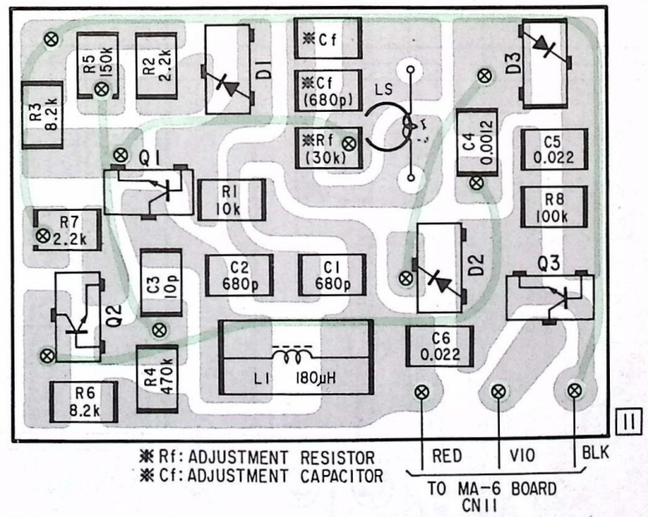

※Rf: ADJUSTMENT RESISTOR
※Cf: ADJUSTMENT CAPACITOR

Note:
- ⊗ : Through hole.
- ▒ : component-side pattern.

TAKE-UP SENSOR BOARD

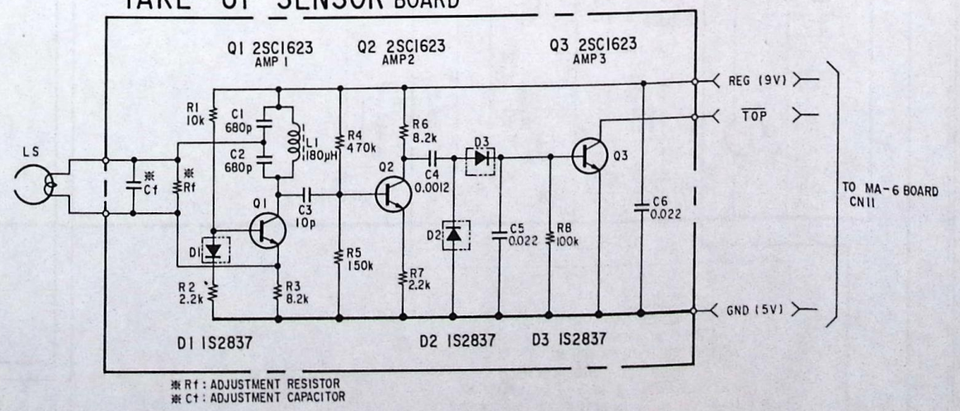

※R1: ADJUSTMENT RESISTOR
※C1: ADJUSTMENT CAPACITOR

SECTION 10
EXPLODED VIEWS
(Projector:FP-60/62)

TABLE OF CONTENTS

Section	*Title*	*Page*
10. EXPLODED VIEWS		
10-1.	Cabinet	10-1
10-2.	Chassis (1)	10-2
10-3.	CRT	10-3
10-4.	Chassis (2)	10-4

PJ EXPLODED VIEWS

SECTION 10
EXPLODED VIEWS

NOTE:
- Items with no part number and no description are not stocked because they are seldom required for routine service.
- The construction parts of an assembled part are indicated with a collation number in the remark column.
- Items marked " * " are not stocked since they are seldom required for routine service. Some delay should be anticipated when ordering these items.

The components identified by shading and mark ⚠ are critical for safety. Replace only with part number specified.

10-1. CABINET

▲ BVTP4 x 12 7-685-661-11
▪ BVTP3 x 8 7-685-646-71
B4 x 10 7-682-562-04

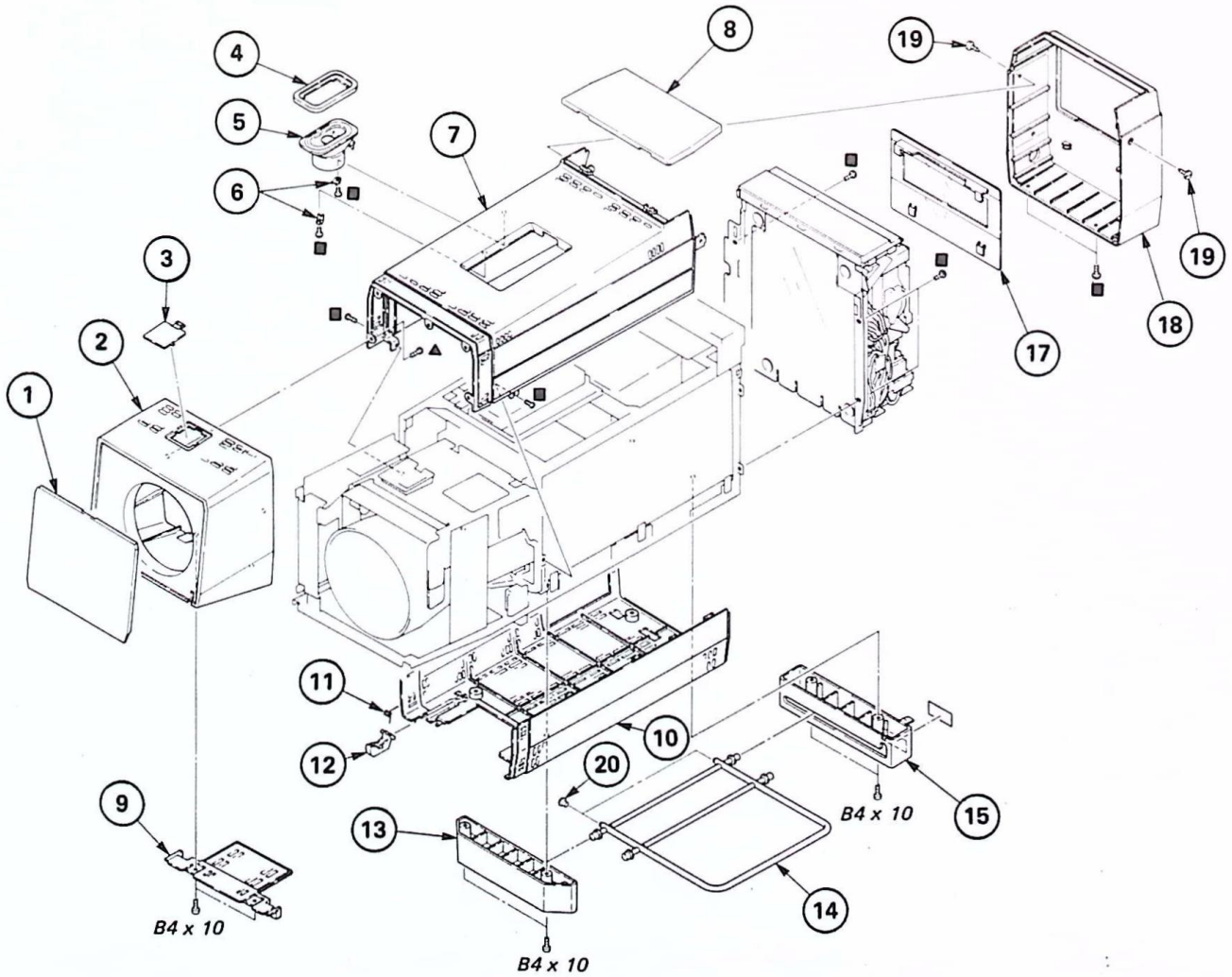

No.	Part No.	Description	Remark
1	X-4373-010-1	LID ASSY, LENS	
2	X-4373-005-1	HOOD ASSY, LENS	3
3	4-373-022-01	COVER, KNOB	
4	*4-364-741-00	CUSHION, SPEAKER	
5	1-503-193-00	SPEAKER	
6	*4-321-611-00	CLAW, RETAINING, SPEAKER	
7	X-4373-013-1	CABINET (UPPER) ASSY	
8	X-4373-015-1	LID ASSY, CONTROL PANEL	
9	4-373-077-01	COVER, BOTTOM	
10	X-4373-011-1	CABINET (LOWER) ASSY	11,12
11	4-373-002-01	SPRING, TORSION	
12	*4-373-028-01	LEVER, RELEASE	
13	X-4373-003-1	LEG (A) ASSY	
14	X-4373-006-1	HOLDER ASSY, CORD	20
15	X-4373-004-1	LEG (B) ASSY	
16	*4-373-089-01	LABEL, MODEL NUMBER	
17	3-678-926-71	COVER, CASSETTE	
18	4-373-070-01	CABINET, B5	
19	4-373-003-01	SCREW, ORNAMENTAL	
20	2-362-365-00	FOOT, RUBBER	

10-2. CHASSIS (1)

■	BVTP3 x 8	7-685-646-71
	P2 x 8	7-621-255-55
	P3 x 6	7-682-147-01

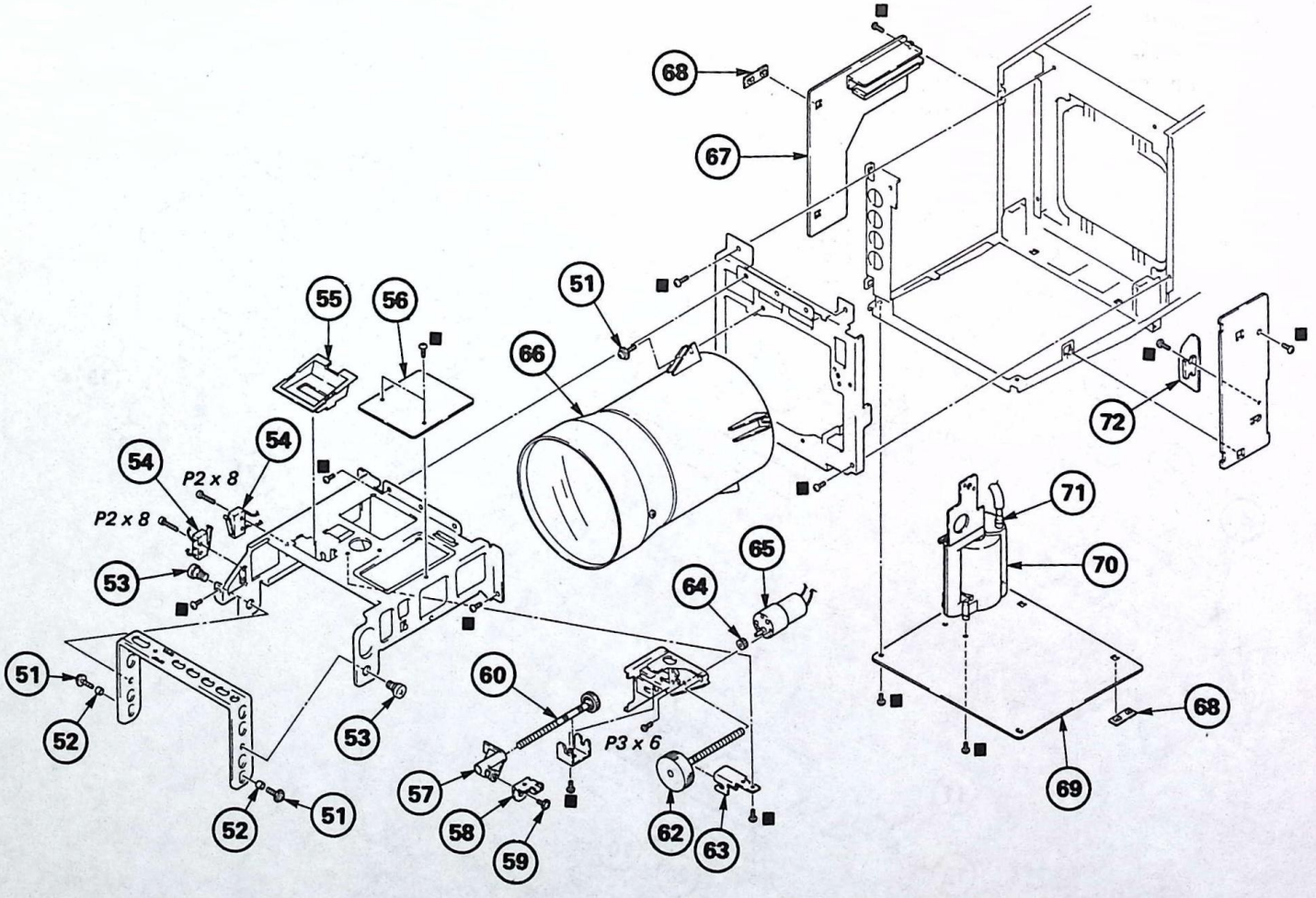

No.	Part No.	Description	Remark
51	4-302-934-00	HEAD, WASHER, TAPPING SCREW	
52	3-659-365-00	SPACER (4X3)	
53	*2-376-613-01	PIN (B), RACK RETAINER	
54	1-553-578-00	SWITCH, MICRO	
55	*X-4373-016-1	CASE ASSY, KNOB	
56	*1-613-913-11	MC BOARD	
57	4-373-018-01	ARM (A), DRIVING	
58	4-373-010-01	ARM (B), DRIVING	
59	4-303-483-00	HEAD, WASHER, TAPPING SCREW	
60	X-4373-002-1	SHAFT (B) ASSY	

No.	Part No.	Description	Remark
62	X-4373-001-1	SHAFT (A) ASSY	57
63	*4-373-019-01	BRACKET (B), RETAINER, SHAFT	
64	4-373-004-01	GEAR (B)	
65	8-835-131-01	MOTOR, DC (DNR-7800A)	
66	4-373-001-01	LENS (DELTA-2)	
67	*A-1389-575-A	T BOARD, COMPLETE	
68	*4-313-732-00	CLIP, HINGE, CIRCUIT BOARD	
69	*A-1190-902-A	P BOARD, COMPLETE	70
70	⚠1-439-346-11	TRANSFORMER ASSY, FLYBACK	
71	4-308-842-11	CAP, FBT LEAD	
72	*1-613-053-11	V BOARD	

NOTE:

The components identified by shading and mark ⚠ are critical for safety. Replace only with part number specified.

10-3. CRT

▫ BVTP3 x 8	7-685-646-71
E3	7-624-106-04

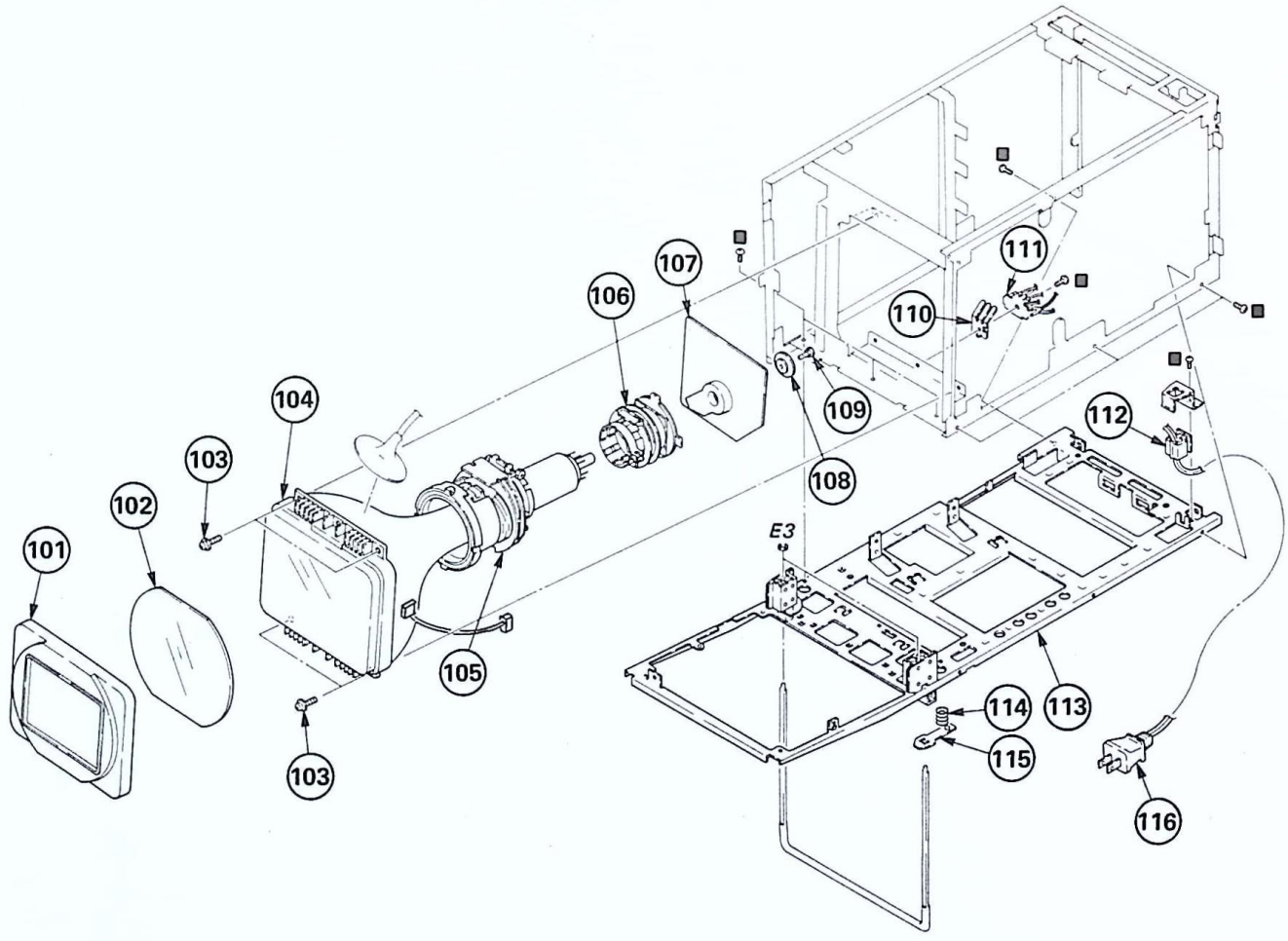

No.	Part No.	Description	Remark
101	4-373-080-01	PACKING	
102	4-373-071-01	PRISM, MICRO	
103	4-302-934-00	HEAD, WASHER, TAPPING SCREW	
104	⚠.8-737-051-05	CRT (EM-7)	
105	⚠.1-451-253-11	DEFLECTION YOKE (EY-7)	
106	⚠.1-452-334-11	NECK ASSY, CRT (NA364)	
107	*A-1330-546-A	C BOARD, COMPLETE	
108	*4-373-090-01	RETAINER	
109	*3-531-576-31	RIVET (DIA. 3), NYLON	
110	4-373-027-01	SPRING (A)	
111	*4-309-624-00	TERMINAL, EARTH	
112	⚠.4-022-115-01	HOLDER, AC CORD	
113	X-4373-009-1	PLATE ASSY, BOTTOM	
114	4-373-078-01	SPRING, COMPRESSION	
115	4-373-023-01	STOPPER	
116	⚠.1-551-286-12	CORD, POWER (Serial No. 13,001 AND LATER)	
	⚠.1-555-465-11	CORD, POWER (UP TO Serial No. 13,000)	

NOTE:

The components identified by shading and mark ⚠ are critical for safety. Replace only with part number specified.

10-4. CHASSIS (2)

■ BVTP3 x 8 7-685-646-71

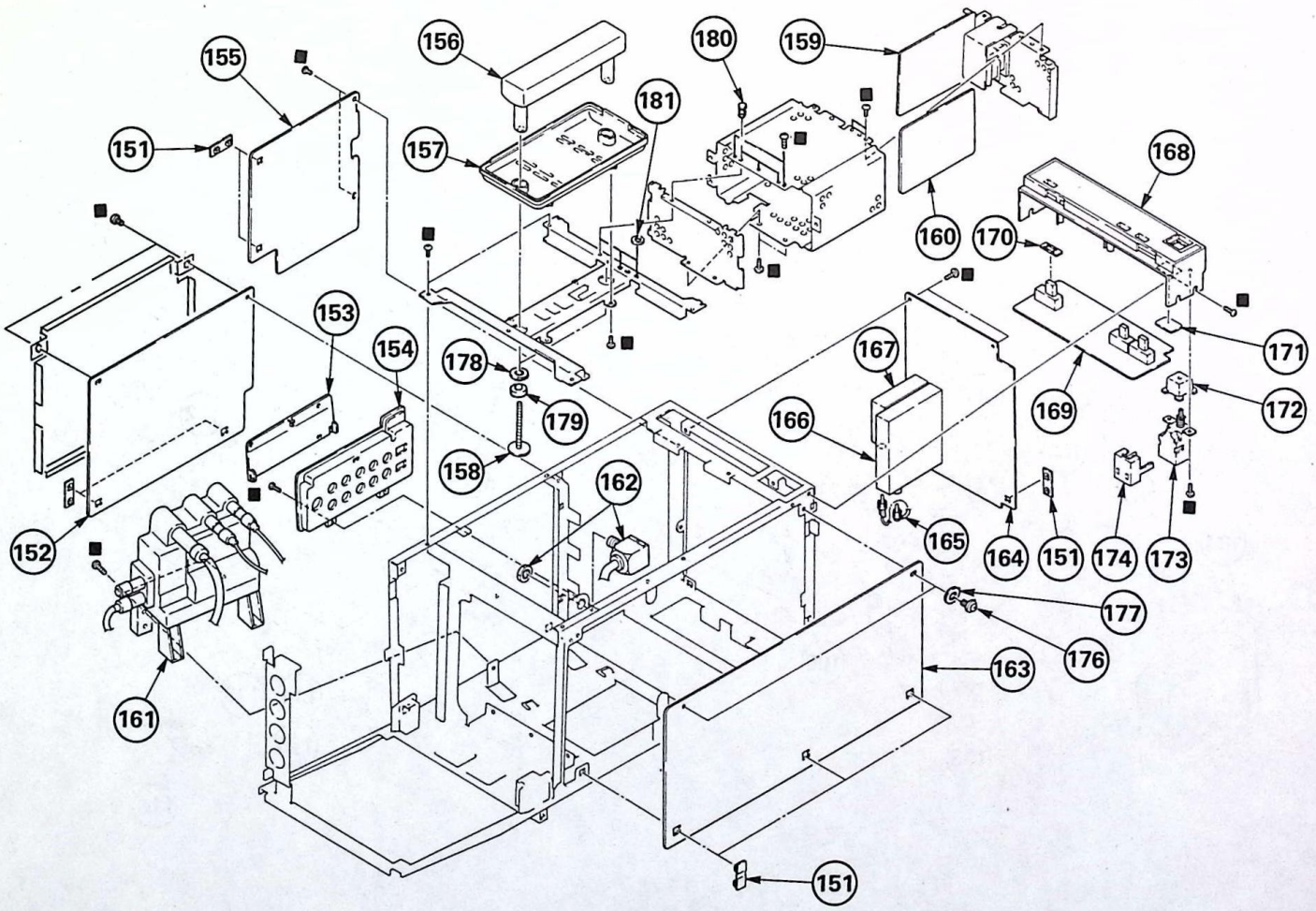

No.	Part No.	Description	Remark
151	*4-313-732-00	CLIP, HINGE, CIRCUIT BOARD	
152	*A-1135-256-A	BB BOARD, COMPLETE	
153	4-373-044-01	LID, SUB CONTROL	
154	X-4373-008-1	PANEL ASSY, SUB CONTROL	
155	*A-1135-255-A	BA BOARD, COMPLETE	
156	X-4373-007-1	HANDLE ASSY	
157	4-373-060-01	HOOD, HANDLE BLOCK	
158	4-373-009-01	SCREW	
159	*1-613-083-11	GB BOARD	
160	*1-613-082-11	GA BOARD	
161	⚠1-453-098-11	DC BLOCK, HIGH-VOLTAGE	
162	1-536-678-21	ANTENNA BLOCK	
163	*A-1340-644-A	D BOARD, COMPLETE	
164	*A-1295-899-A	A BOARD, COMPLETE	166,167
165	*1-555-110-00	CABLE, PIN	
166	⚠1-463-470-00	TUNER, ET (BT-896)	

No.	Part No.	Description	Remark
167	⚠1-463-471-31	SYNTHESIZER UNIT, FREQUENCY	
168	X-4373-012-1	PANEL ASSY, CONTROL	
169	*A-1306-309-A	MA BOARD, COMPLETE	
170	*4-337-847-00	INSULATOR, SLIDE SWITCH	
171	*1-613-376-11	MB BOARD	
172	4-346-409-11	BUTTON, POWER	
173	⚠1-553-584-12	SWITCH, PUSH (POWER)	
174	4-373-038-01	COVER, SWITCH, POWER	
175	4-373-103-01	INSULATOR, BB	
176	4-303-483-00	HEAD, WASHER, TAPPING SCREW	
177	4-832-754-01	WASHER, FIBER	
178	4-373-114-01	WASHER, RUBBER	
179	4-859-003-11	WASHER NYLON	
180	4-531-576-41	RIVET NYLON	
181	4-830-292-01	WASHER, FIBER	

NOTE:

The components identified by shading and mark ⚠ are critical for safety. Replace only with part number specified.

FP-62 EXPLODED VIEWS AND ELECTRICAL PARTS LIST

This EXPLODED VIEWS and ELECTRICAL PARTS LIST
indicate the different portion from FP-60.
Please show FP-60 Parts List for common parts.

EXPLODED VIEWS

10-1. CABINET

▲	BVTP4 x 12	7-685-661-11
■	BVTP3 x 8	7-685-646-71
	B4 x 10	7-682-562-04

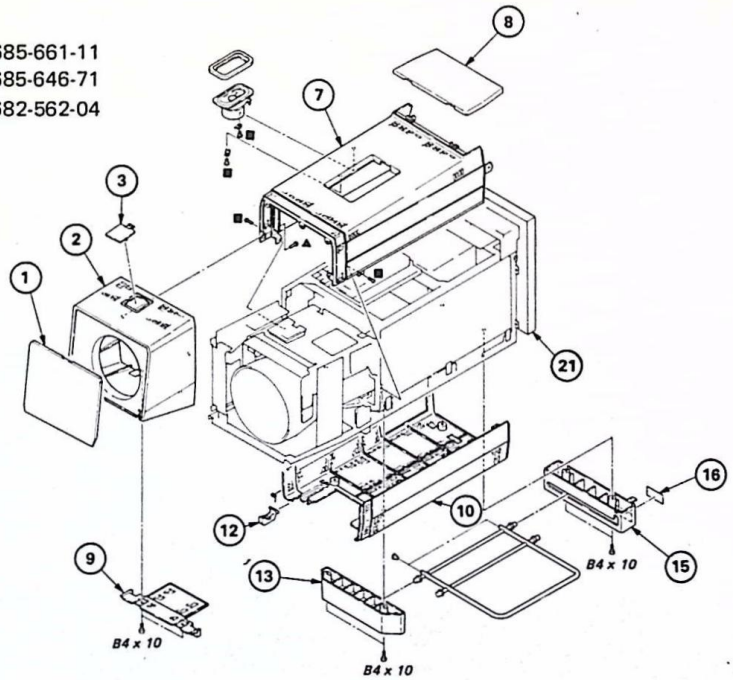

No.	Part No.	Description	Remark
1	X-4373-010-3	LID ASSY LENS	
2	X-4373-024-2	HOOD ASSY, LENS	
3	4-373-022-11	COVER KNOB	
7	X-4373-026-2	CABINET (UPPER) ASSY	
8	4-373-107-01	LID, CONTROL PANEL	
9	4-373-077-11	COVER, BOTTOM	
10	X-4373-011-3	CABINET (LOWER) ASSY	
12	4-373-028-11	LEVER, RELEASE	
13	X-4373-003-2	LEG (A) ASSY	
15	X-4373-004-2	LEG (B) ASSY	
*16	4-373-116-01	LABEL, MODEL NUMBER	
21	4-373-108-01	COVER, BACK	

10-2. CHASSIS (1)

■	BVTP3 x 8	7-685-646-71
	P2 x 8	7-621-255-55
	P3 x 6	7-682-147-01

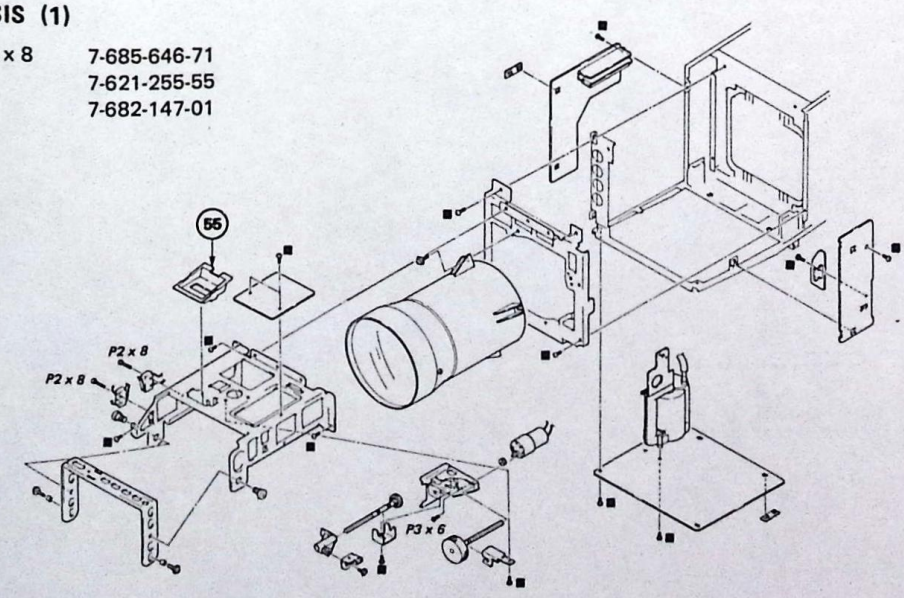

No.	Part No.	Description	Remark
55	4-373-046-11	CASE KNOB	

10-4. CHASSIS (2)

■ BVTP3 x 8 7-685-646-71

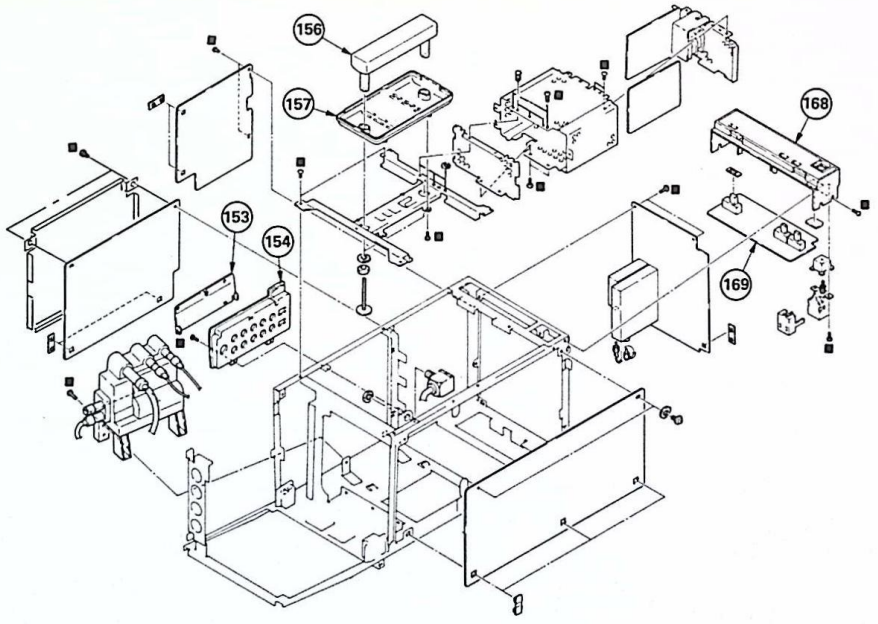

Ref.No.	Part No.	Description	Remark
153	4-373-044-11	LID, SUB CONTROL	
154	X-4373-017-1	PANEL ASSY, SUB CONTROL	
156	X-4373-007-2	HANDLE ASSY	
157	4-373-060-11	HOOD, HANDLE BLOCK	
168	X-4373-012-3	PANEL ASSY, CONTROL	

ELECTRICAL PARTS LIST

Ref.No.	Part No.	Description			Remark
	*1-613-913-11	MC BOARD			
		********			
BZ031	1-529-020-00	BUZZER			
C034	1-102-125-00	CERAMIC	0.0047MF		
C035	1-102-125-00	CERAMIC	0.0047MF		
D031	8-719-911-19	DIODE 1SS119			
Q033	8-729-178-54	TRANSISTOR 2SC2758			
Q034	8-729-178-54	TRANSISTOR 2SC2758			
Q035	8-729-178-54	TRANSISOTR 2SC2758			
R041	1-247-831-00	CARBON	1K	5%	1/6W
R042	1-247-867-00	CARBON	33K	5%	1/6W
R043	1-247-867-00	CARBON	33K	5%	1/6W
R044	1-247-831-00	CARBON	1K	5%	1/6W
R045	1-247-855-00	CARBON	10K	5%	1/6W
R046	1-247-875-00	CARBON	68K	5%	1/6W

****

ACCESSORIES AND PACKING MATERIALS
****

4-493-987-22	MANUAL, INSTRUCTION
4-373-109-01	INDIVIDUAL, CARTON

SECTION 11
VIDEO EXPLODED VIEW
(Video : FP-60)

TABLE OF CONTENTS

Title		*Page*
11-1.	CABINET	11-2
11-2.	FRONT PANEL	11-3
11-3.	PRINTED CIRCUIT BOARD	11-4
11-4.	CASSETTE COMPARTMENT ASSEMBLY	11-5
11-5.	ACE HEAD ASSEMBLY	11-6
11-6.	PINCH ROLLER SOLENOID ASSEMBLY	11-7
11-7.	LOADING MOTOR ASSEMBLY	11-8
11-8.	TP AND LOCK ARM ASSEMBLY	11-9
11-9.	SHUTLE GUIDE AND ULE SWITCH ASSEMBLY	11-10
11-10.	DRUM ASSEMBLY	11-11
11-11.	LOADING RING ASSEMBLY	11-12
11-12.	REEL MOTOR AND CAPSTAN MOTOR ASSEMBLY	11-13
11-13.	CASSETTE CONTROL LOCK ASSEMBLY	11-14
11-14.	RP-11 BOARD	11-15
11-15.	HARD WARE LIST	11-16

NOTE:
- Items with no part number and no description are not stocked because they are seldom required for routine service.
- The construction parts of an assembled part are indicated with a collation number in the remark column.
- Items marked " * " are not stocked since they are seldom required for routine service. Some delay should be anticipated when ordering these items.

The components identified by shading and mark ⚠ are critical for safety. Replace only with part number specified.

11-1. CABINET

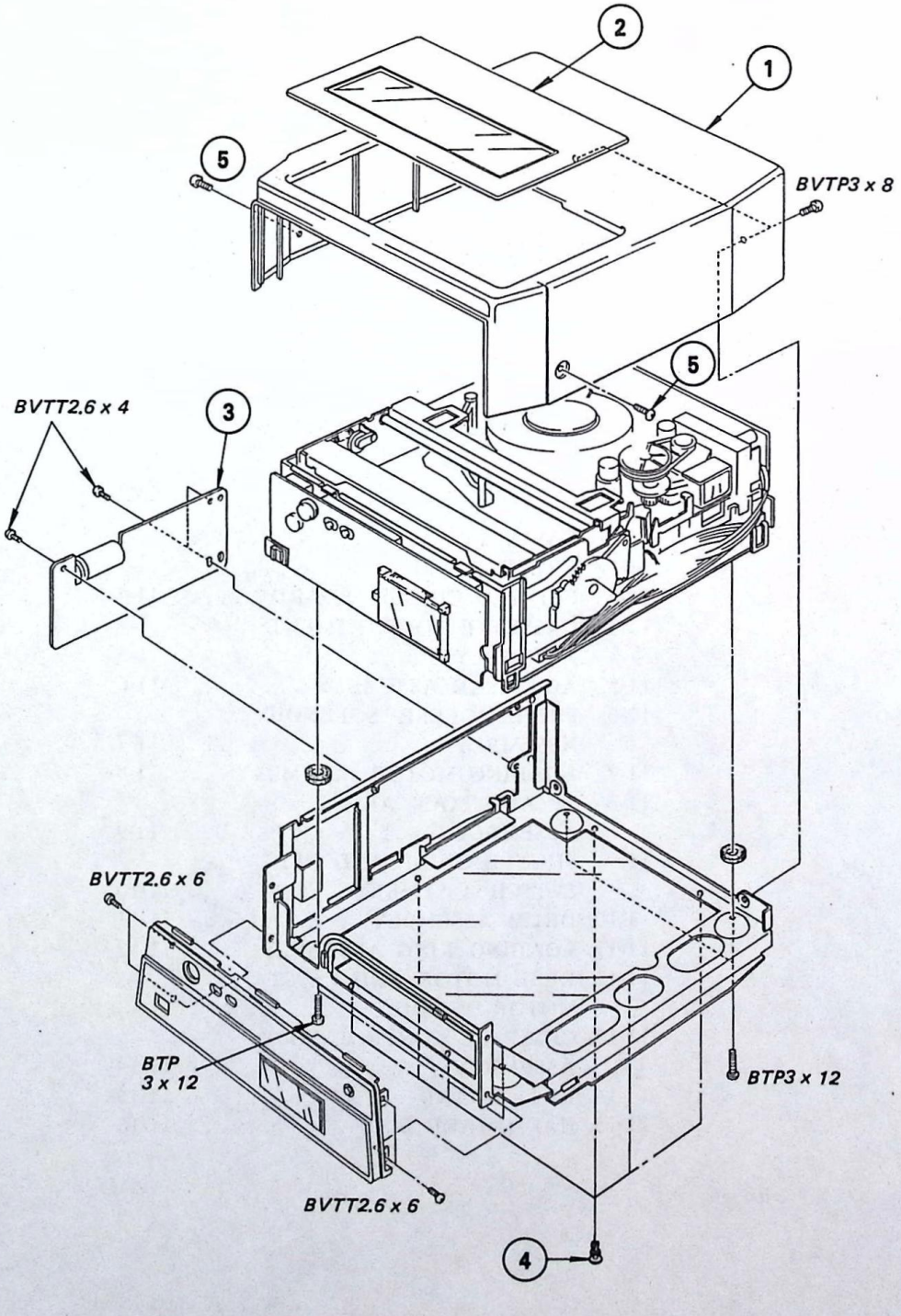

No.	Part No.	Description	Remark
1	4-373-070-01	CABINET	
2	3-678-926-71	CASSETTE COVER	
3	*A-6724-401-A	OM-1 BOARD, COMPLETE	
4	3-535-531-00	SPRING, TENSION	
5	4-373-003-01	SCREW, ORNAMENTAL	

11-2. FRONT PANEL

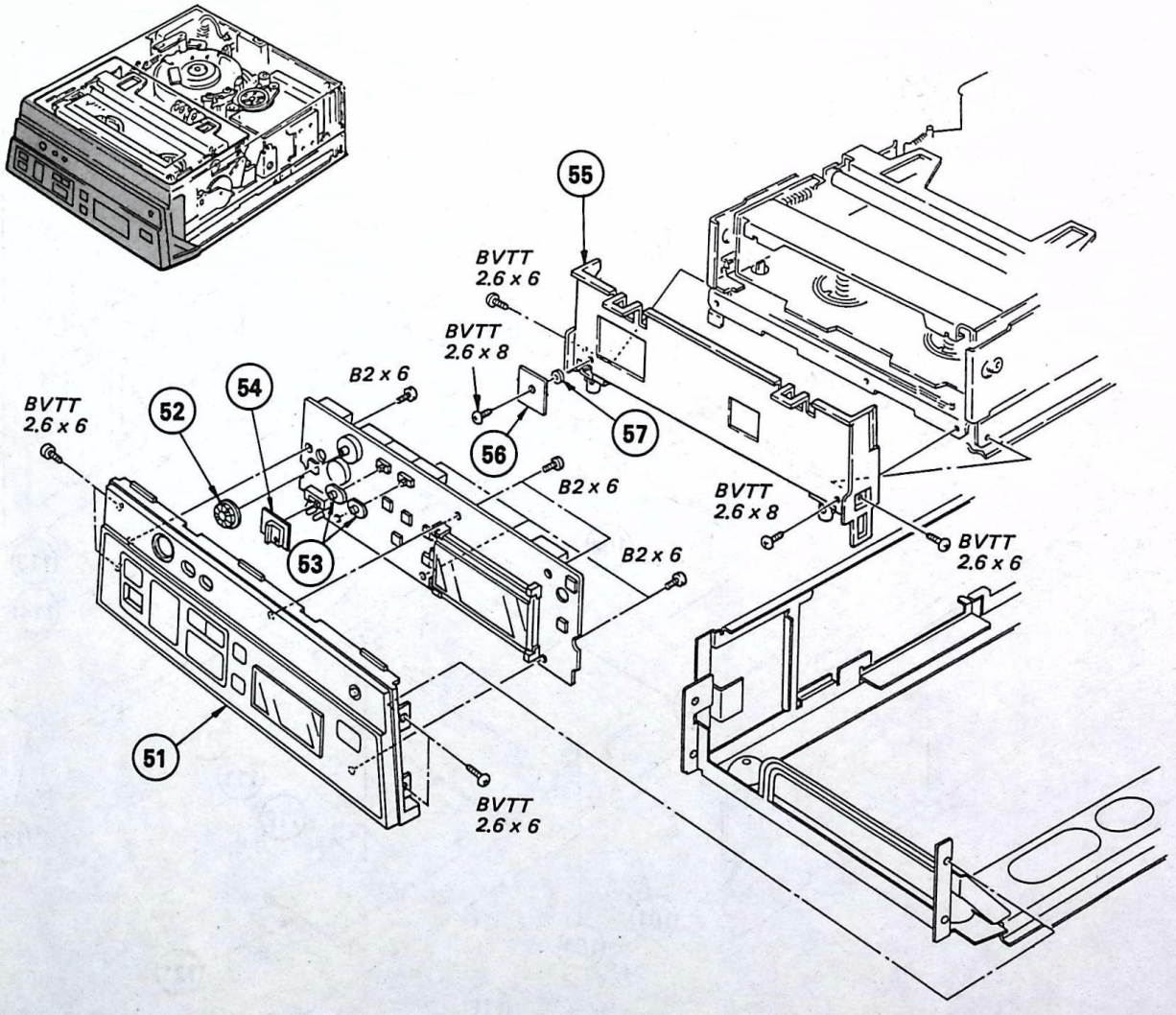

No.	Part No.	Description	Remark
51	X-3678-867-1	PANEL ASSY, CONTROL	
52	3-678-809-00	KNOB, TRACK CONTROL	
53	3-678-810-01	KNOB, SLIDE	
54	3-678-878-00	BUTTON, REC	

No.	Part No.	Description	Remark
55	*3-678-928-00	FRAME (FRONT), MECH CHASSIS	
56	*1-613-194-12	TS-43 BOARD	
57	2-045-013-31	WASHER, PANEL (DIA.4)	

11-3. PRINTED CIRCUIT BOARD

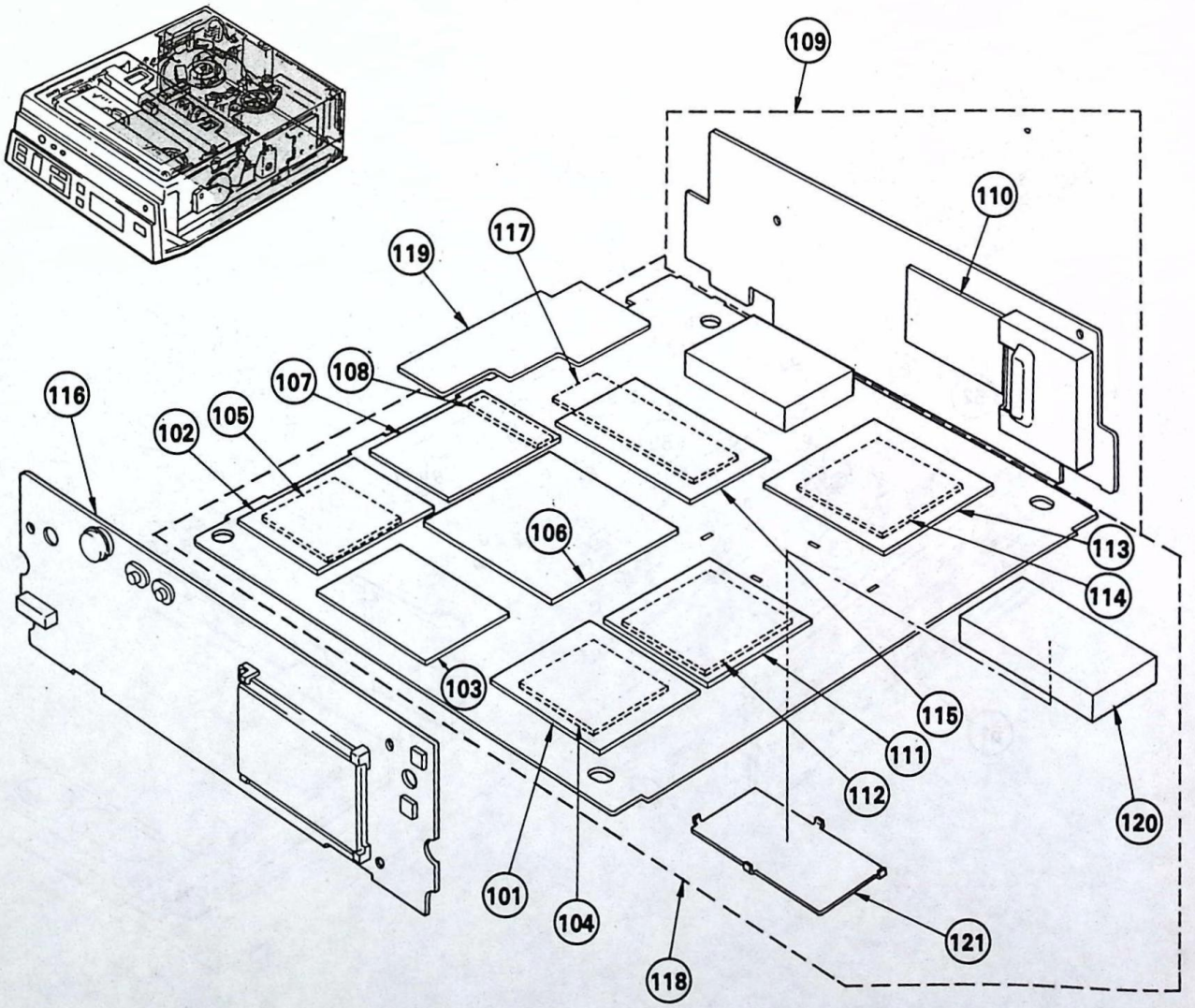

No.	Part No.	Description	Remark
101	*A-6711-393-A	YF-1 BOARD, COMPLETE	
102	*A-6711-394-A	YM-1 BOARD, COMPLETE	
103	*A-6711-395-A	YS-1 BOARD, COMPLETE	
104	*A-6711-396-A	PF-3 BOARD, COMPLETE	
105	*A-6711-397-A	DE-2 BOARD, COMPLETE	
106	*A-6711-398-A	CM-4 BOARD, COMPLETE	
107	*A-6711-561-A	JG-1 BOARD, COMPLETE	
108	*A-6711-400-A	VB-1 BOARD, COMPLETE	
109	*A-6713-216-A	MC-1 BOARD, COMPLETE	110
110	*A-6713-154-A	AD-9 BOARD, COMPLETE	
111	*A-6715-176-A	RM-9 BOARD, COMPLETE	
112	*A-6715-177-A	RS-1 BOARD, COMPLETE	
113	*A-6715-178-A	SV-11 BOARD, COMPLETE	
114	*A-6715-179-A	SP-1 BOARD, COMPLETE	
115	*A-6715-236-A	SD-1 BOARD, COMPLETE	
116	*A-6717-368-A	FD-3 BOARD, COMPLETE	
117	*A-6723-252-A	PC-5 BOARD, COMPLETE	
118	*A-6725-399-A	MA-6 BOARD, COMPLETE	101-108, 111-115, 117, 120, 121
119	*1-613-192-11	LU-1 BOARD	
120	*X-3678-822-0	CASE (LID) ASSY, SHIELD, MD	
121	*X-3678-823-0	CASE (BOTTOM) ASSY, SHIELD, MD	

11-4. CASSETTE COMPARTMENT ASSEMBLY

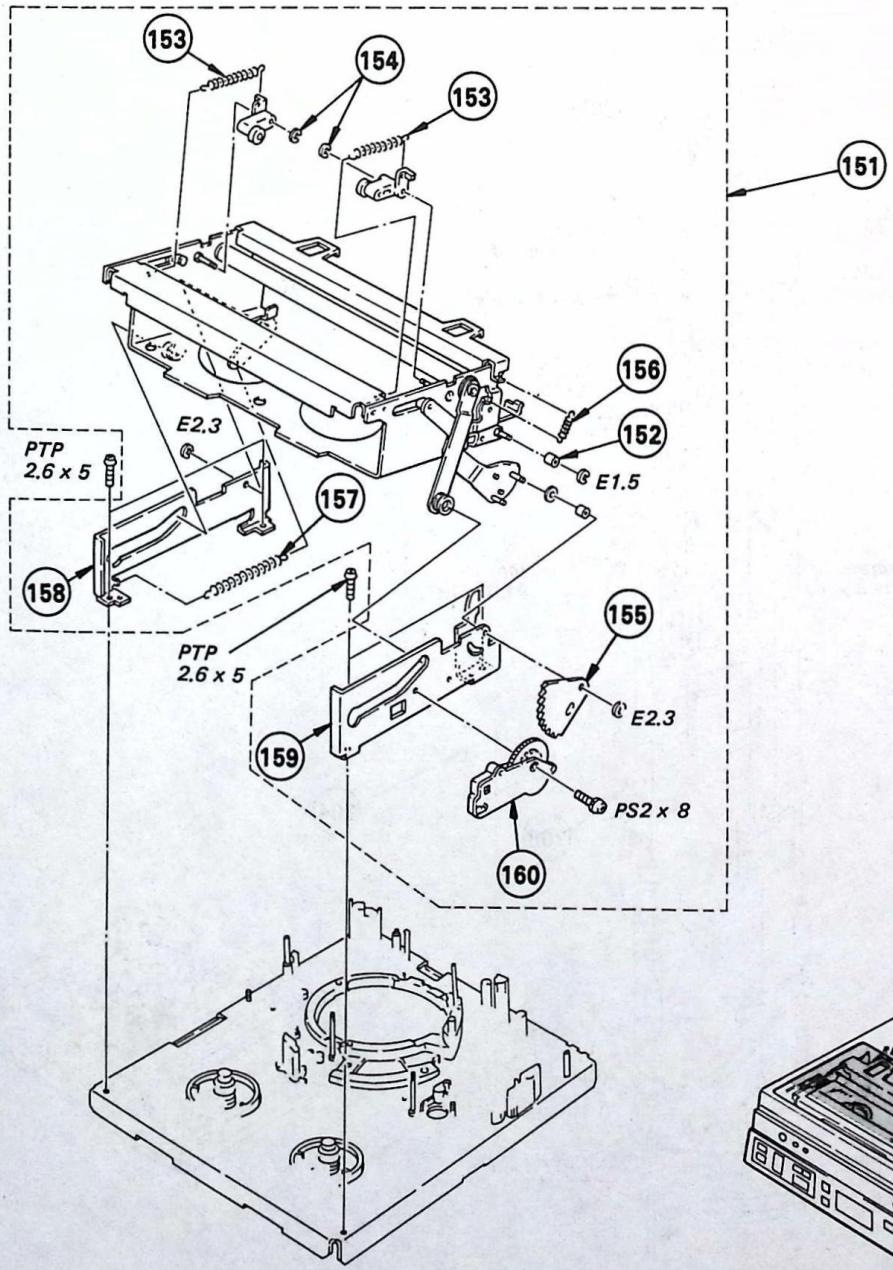

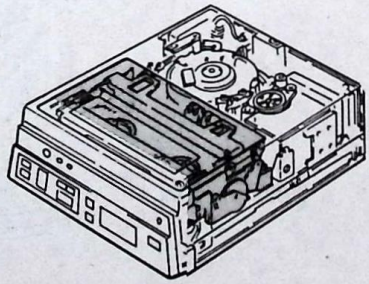

No.	Part No.	Description	Remark
151	A-6751-156-A	CASSETTE COMPARTMENT BLOCKASSY	152-160
152	3-669-381-00	ROLLER, OPEN, LID	
153	3-669-386-00	SPRING, TENSION	
154	3-669-595-00	WASHER (2), STOPPER	
155	3-678-826-00	GEAR, FAN	
156	3-678-831-00	SPRING, TENSION	
157	3-678-832-00	SPRING, TENSION	
158	*3-678-899-00	SUPPORT (LEFT)	
159	*3-678-900-00	SUPPORT (RIGHT)	
160	3-678-972-00	DAMPER	

11-5. ACE HEAD ASSEMBLY

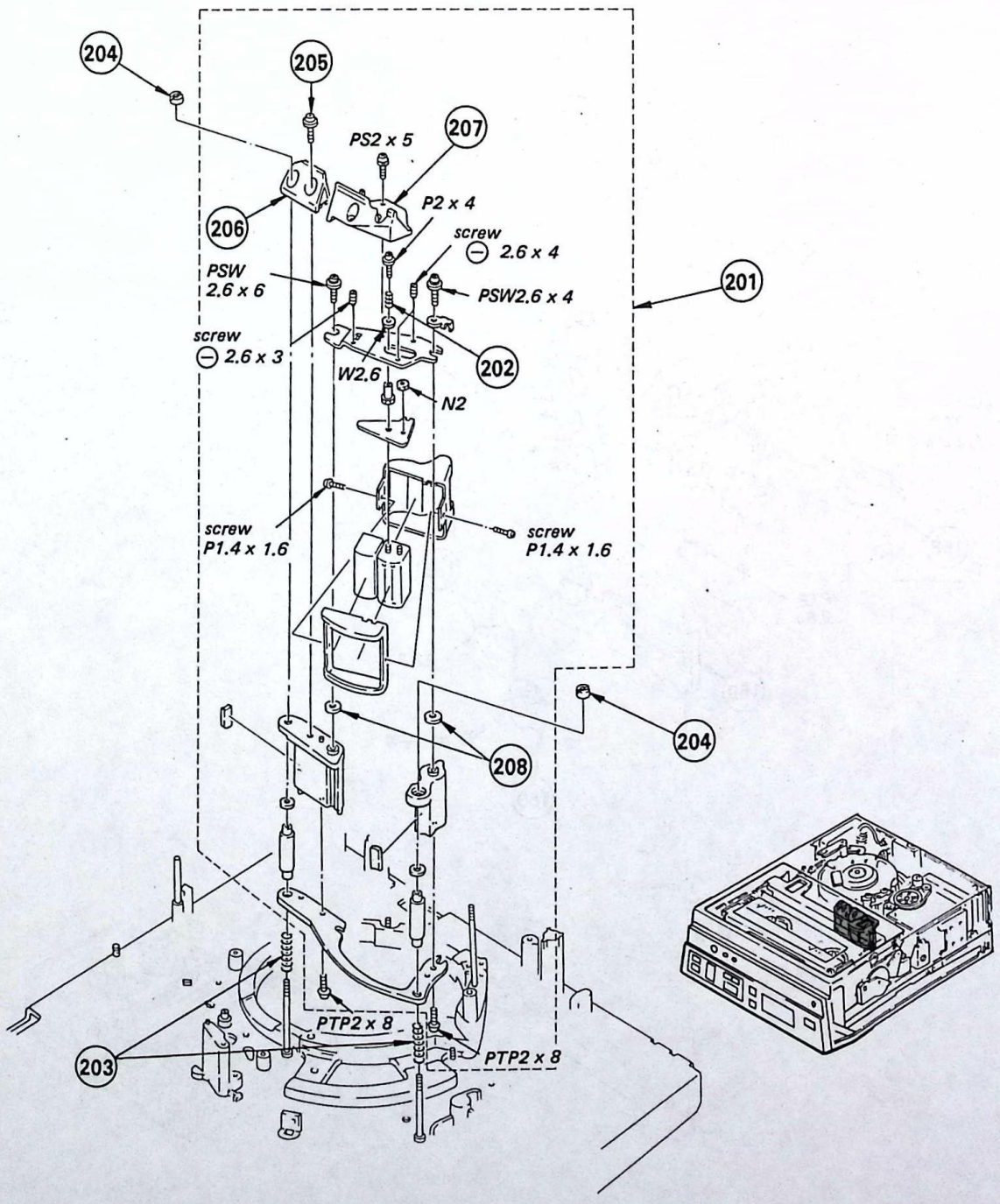

No.	Part No.	Description	Remark
201	A-6761-055-A	ACE ASSY	205-208
202	*3-669-316-00	SPRING, COMPRESSION	
203	3-669-317-00	SPRING, COMPRESSION	
204	3-669-318-00	NUT, ADJUSTMENT, GUIDE	
205	3-669-480-11	+ PTPWH 2	
206	*3-669-537-03	SLOPE (LEFT)	
207	*3-669-541-00	SLOPE (RIGHT)	
208	3-669-598-00	WASHER, CTL	

11-6. PINCH ROLLER SOLENOID ASSEMBLY

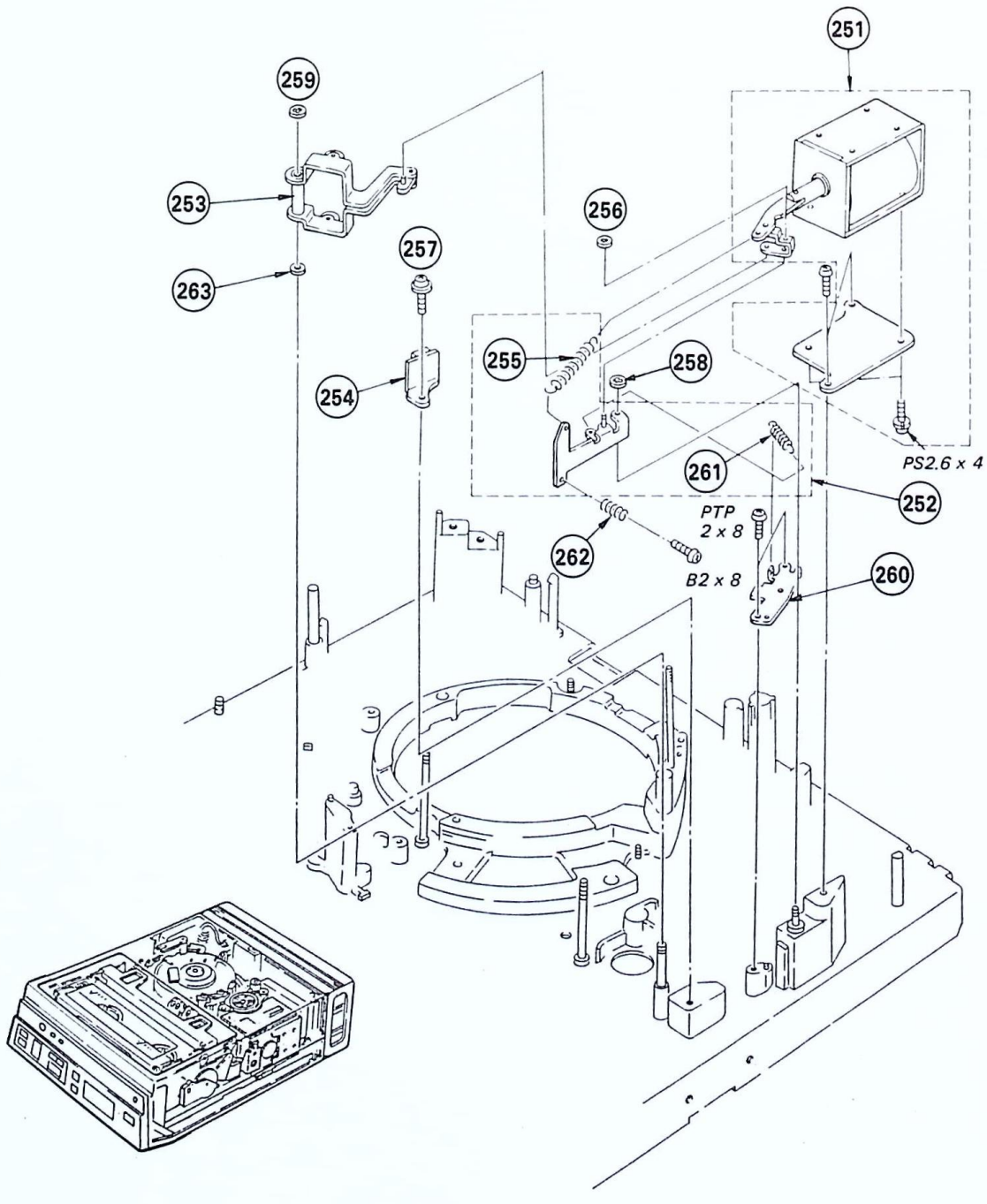

No.	Part No.	Description	Remark
251	⚠A-6749-079-A	SOLENOID BLOCK ASSY, PINCH	
252	*X-3678-803-0	ARM (P) ASSY, PINCH LIMITER	255, 261
253	*X-3678-804-0	ARM ASSY, PINCH PRESS	
254	1-464-247-00	SENSOR, T COIL	
255	3-662-752-00	SPRING, TENSION	
256	3-669-465-00	WASHER (1.5), STOPPER	
257	3-669-480-11	+ PTPWH 2	
258	3-669-595-00	WASHER (2), STOPPER	
259	3-669-596-00	WASHER (2.3), STOPPER	
260	*3-678-851-00	PLATE, LOCK, T	
261	3-678-864-00	SPRING, TENSION	
262	4-876-347-00	SPRING, COMPRESSION	
263	3-701-439-01	WASHER	

The components identified by shading and mark ⚠ are critical for safety. Replace only with part number specified.

11-7. LOADING MOTOR ASSEMBLY

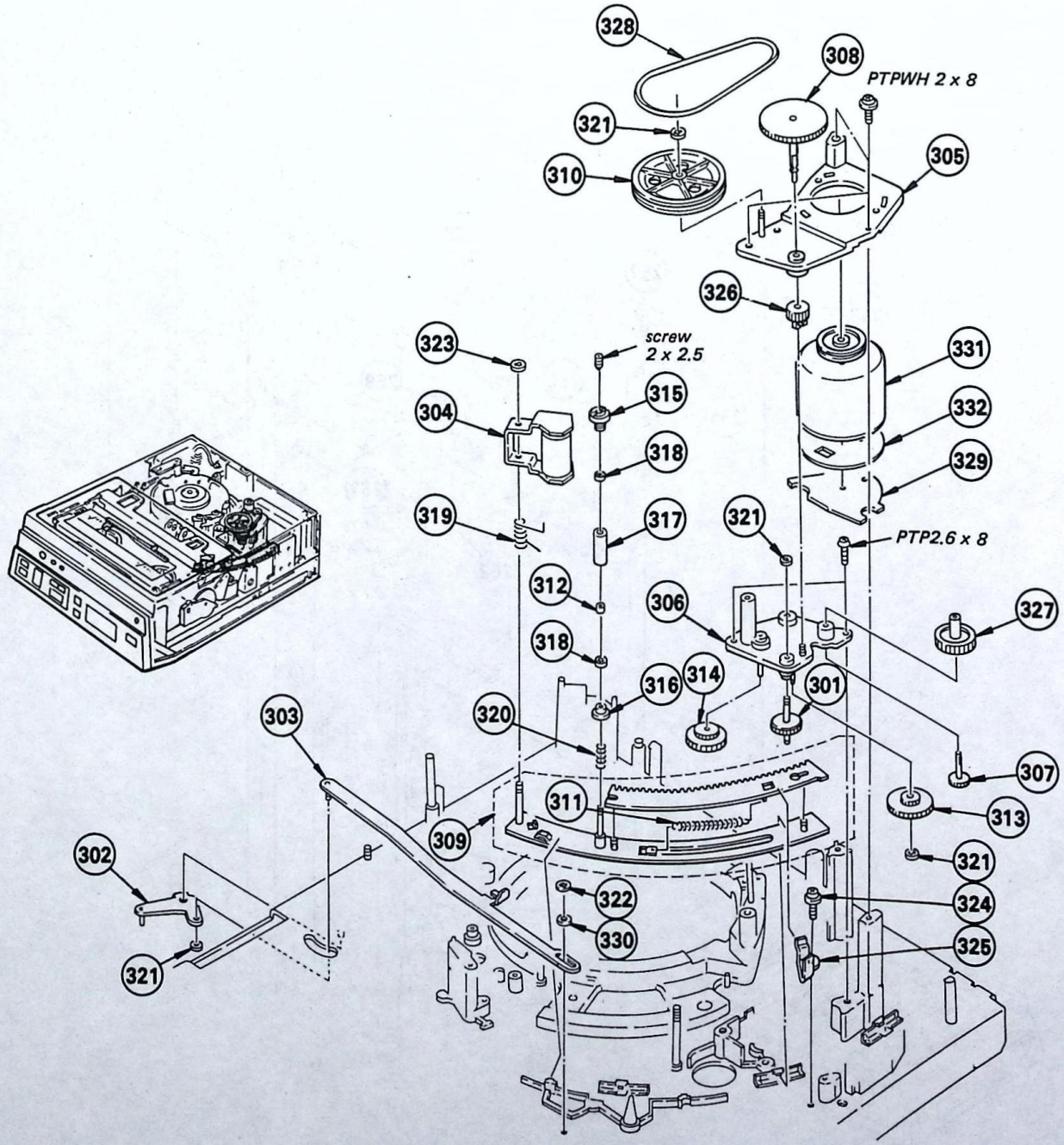

No.	Part No.	Description	Remark
301	X-3669-305-0	GEAR (F) ASSY	
302	*X-3669-331-0	LEVER ASSY, RELEASE	
303	*X-3669-366-0	PLATE ASSY, SLIDE, IL	
304	X-3678-801-0	ARM ASSY, PINCH ROLLER	
305	*X-3678-808-0	CHASSIS ASSY, L MOTOR	
306	*X-3678-809-0	CHASSIS ASSY, DRIVE GEAR	
307	X-3678-812-0	GEAR (CD) ASSY	
308	X-3678-815-0	GEAR (BA) ASSY	
309	*X-3678-816-0	GEAR ASSY, SLIDER	
310	X-3678-830-0	PULLEY ASSY, GEAR	
311	3-549-014-00	SPRING, TENSION	
312	3-657-841-31	SPACER (2X2.5)	
313	3-669-337-00	GEAR (D)	
314	3-669-338-00	GEAR (E)	
315	3-669-431-00	FLANGE (UPPER), GUIDE	
316	3-669-432-00	FLANGE (LOWER), GUIDE	

No.	Part No.	Description	Remark
317	3-669-438-11	ROLLER (#9), GUIDE	
318	3-669-443-00	BEARING, BALL (NO FLANGE)	
319	3-669-444-00	SPRING, TORSION	
320	3-669-452-00	SPRING, COMPRESSION	
321	3-669-465-00	WASHER (1.5), STOPPER	
322	3-669-595-00	WASHER (2), STOPPER	
323	3-669-596-00	WASHER (2.3), STOPPER	
324	3-669-607-31	+PSW (SMALL ROUND) (2.6)	
325	*3-678-852-00	STOPPER, SLIDER	
326	3-678-859-00	GEAR (BC)	
327	3-678-861-00	GEAR (CB)	
328	3-678-863-00	BELT, RUBBER	
329	*3-678-891-00	INSULATOR, L MOTOR	
330	3-701-438-21	WASHER	
331	8-835-086-01	MOTOR, DC (DNR-6100A)	
332	1-609-071-00	PC BOARD, LOADING MOTOR	

11-8. TP AND LOCK ARM ASSEMBLY

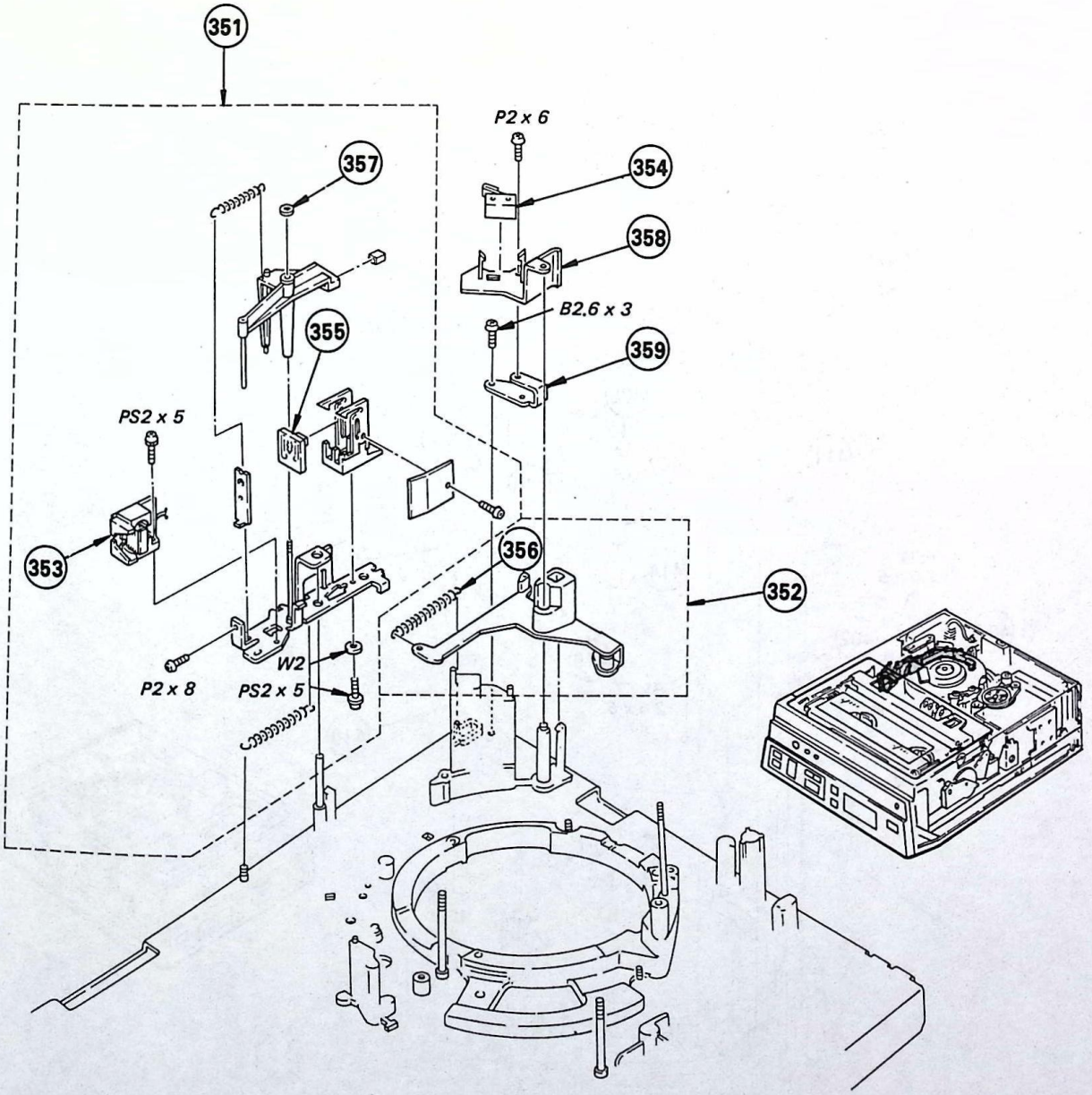

No.	Part No.	Description	Remark
351	A-6742-052-A	TP ASSY	353, 355, 357
352	X-3678-819-0	ARM ASSY, LOCK	356
353	1-464-246-00	SENSOR, S COIL	
354	1-553-718-00	SWITCH, MICRO	
355	1-806-633-00	ELEMENT, MAGNETIC RESISTOR	
356	3-531-860-00	SPRING, TENSION	
357	3-669-465-00	WASHER (1.5), STOPPER	
358	*3-678-834-00	BRACKET, LE SWITCH	
359	*3-678-896-00	STAY, FITTING	

11-9. SHUTTLE GUIDE AND ULE SWITCH ASSEMBLY

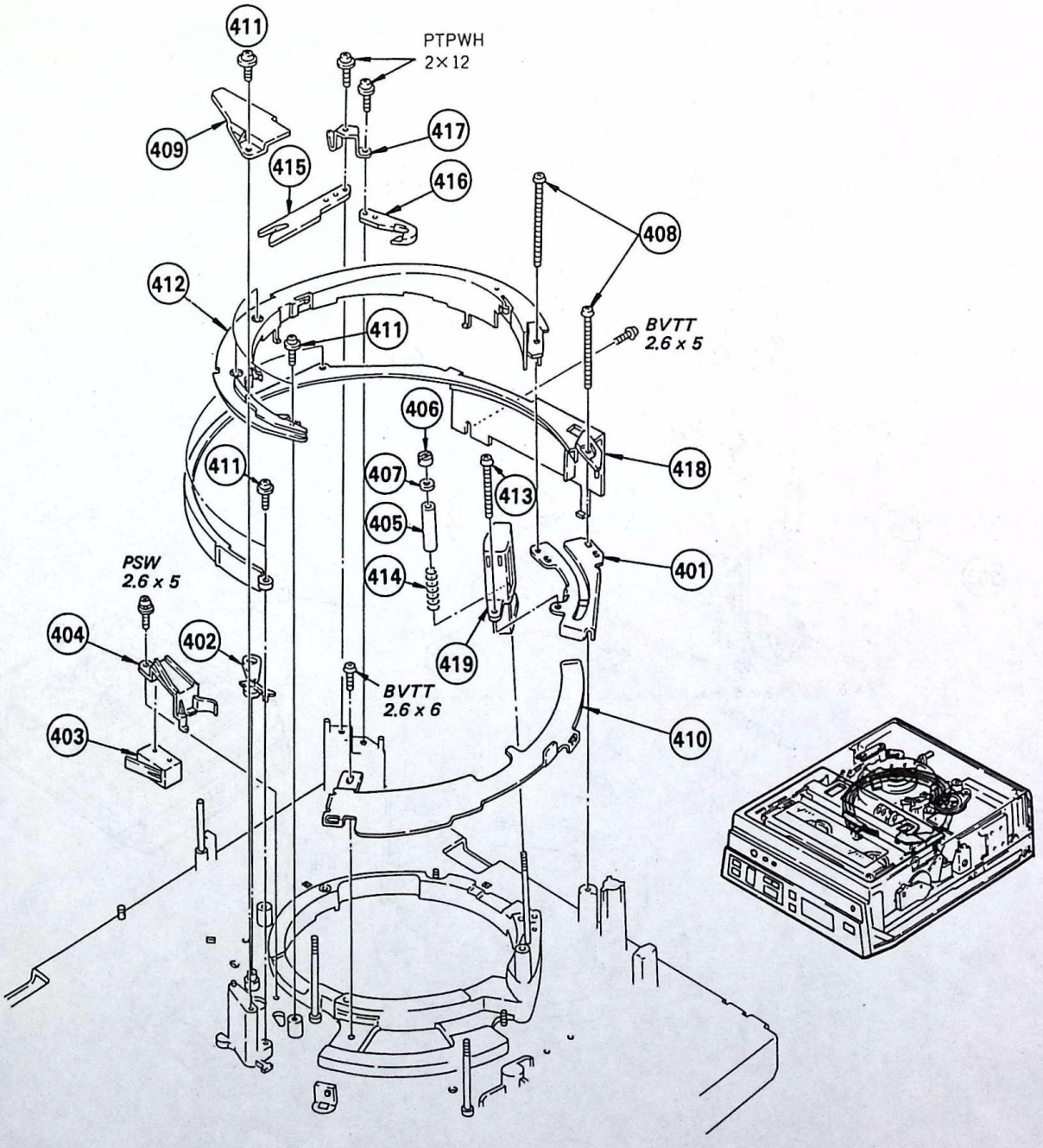

No.	Part No.	Description	Remark
401	*X-3679-263-1	BASE ASSY, SLANT	
402	X-3669-327-0	ARM ASSY, SWITCH, ULE	
403	1-553-718-00	SWITCH, MICRO	
404	*3-669-355-00	HOLDER, SWITCH, ULE	
405	3-669-445-00	SPACER, GUIDE, NO. 6	
406	3-669-446-00	NUT, GUIDE, NO. 6	
407	3-679-910-00	FLANGE (S), GUIDE, NUMBER 6	
408	3-669-466-00	SCREW (M 2.6)	
409	3-669-476-04	PLATE, GUIDE	
410	*3-669-477-00	LINER, LINK, PIN	
411	3-669-480-11	+ PTPWH 2	
412	*3-669-584-00	GUIDE (1), SHUTTLE	
413	3-669-606-00	SCREW (2.6)	
414	3-669-615-00	SPRING, COMPRESSION	
415	*3-669-618-00	PLATE (2), ADJUST	
416	*3-672-507-00	PLATE (3-1), ADJUSTMENT	
417	*3-684-158-01	PLATE, GROUND, TAPE GUIDE	
418	3-678-935-00	GUIDE (2), SHUTTLE	
419	8-825-508-20	HEAD, FE	

11-10. DRUM ASSEMBLY

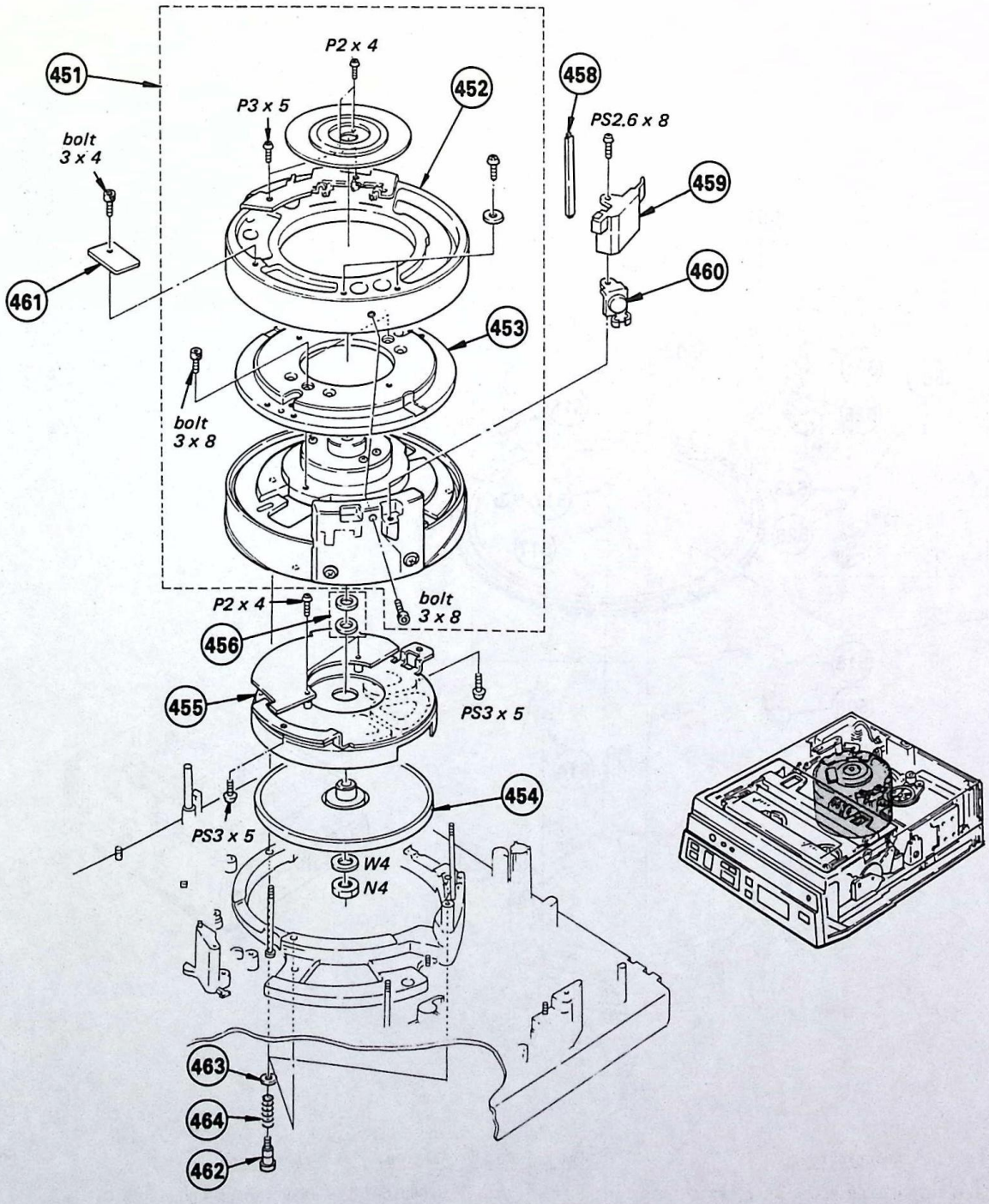

No.	Part No.	Description	Remark
451	A-6050-174-A	DRUM ASSY, DSH-33A-R	452, 453
452	A-6760-138-A	SUB DRUM ASSY, UPPER	
453	A-6762-115-A	DISK ASSY, DSR-33-R	
454	X-2621-202-0	D ROTER ASSY	
455	X-2621-204-0	D STATER ASSY	
456	X-3669-105-0	SPACER BLOCK	

No.	Part No.	Description	Remark
458	*X-3678-825-0	STAY ASSY	
459	*X-3678-835-0	COVER ASSY, HEATER	
460	1-446-961-31	HEATER, PTC	
461	1-806-230-42	SENSOR, DEW CONDENSATION	
462	3-669-302-00	SCREW, FITTING	
463	3-669-600-11	WASHER, FLAT (3.5)	
464	3-429-123-00	SPRING	

11-11. LOADING RING ASSEMBLY

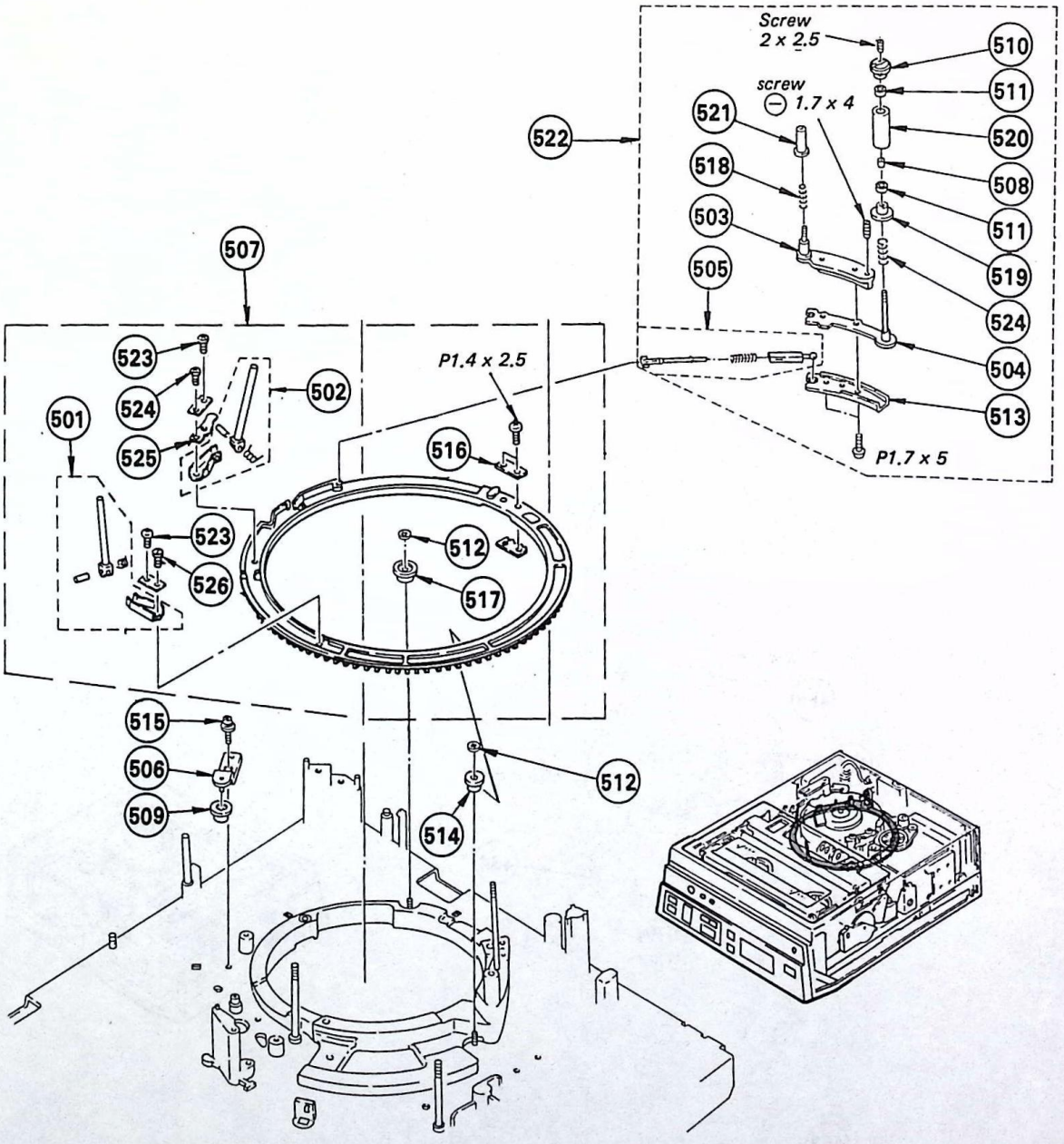

No.	Part No.	Description	Remark
501	*X-3669-429-0	HOLDER BLOCK ASSY, #2 GUIDE	
502	*X-3669-430-0	HOLDER BLOCK ASSY, #3 GUIDE	
503	*X-3679-266-1	PLATE ASSY, SHUTTLE	
504	*X-3679-267-1	HEAD ASSY, TILT	
505	X-3669-316-0	ROD ASSY, PUSH	
506	*X-3669-329-0	PLATE ASSY, ADJUSTMENT	
507	X-3669-431-0	RING ASSY, S LOADING	501, 502
508	3-657-841-41	SPACER (2X8)	
509	3-669-360-00	ROLLER, RING	
510	3-669-431-00	FLANGE (UPPER), GUIDE	
511	3-669-443-00	BEARING, BALL (NO FLANGE)	
512	3-669-465-00	WASHER (1.5), STOPPER	
513	*3-669-540-00	BLOCK, SHUTTLE	
514	3-669-597-00	ROLLER (B), RING	
515	3-669-607-11	+PSW (SMALL ROUND) (2.6)	
516	*3-669-616-00	RETAINER	
517	3-669-630-00	ROLLER (C), RING	
518	3-669-666-00	SRING, COMPRESSION	
519	3-669-667-00	FLANGE (LOWER), GUIDE	
520	3-669-668-11	ROLLER (#5), GUIDE	
521	3-677-531-00	SLEEVE, GUIDE, NO. 4	
522	A-6750-158-B	SHUTTLE (2) BLOCK ASSY	503-505, 508, 510, 511, 513, 518-521
523	3-669-478-00	SCREW (1×3), TAPPING	
524	3-669-479-11	SCREW (1.4×3.5), TAPPING	
525	3-672-583-00	SPRING	
526	3-672-586-00	SCREW (1.4×3), TAPPING	

11-12. REEL MOTOR AND CAPSTAN MOTOR ASSEMBLY

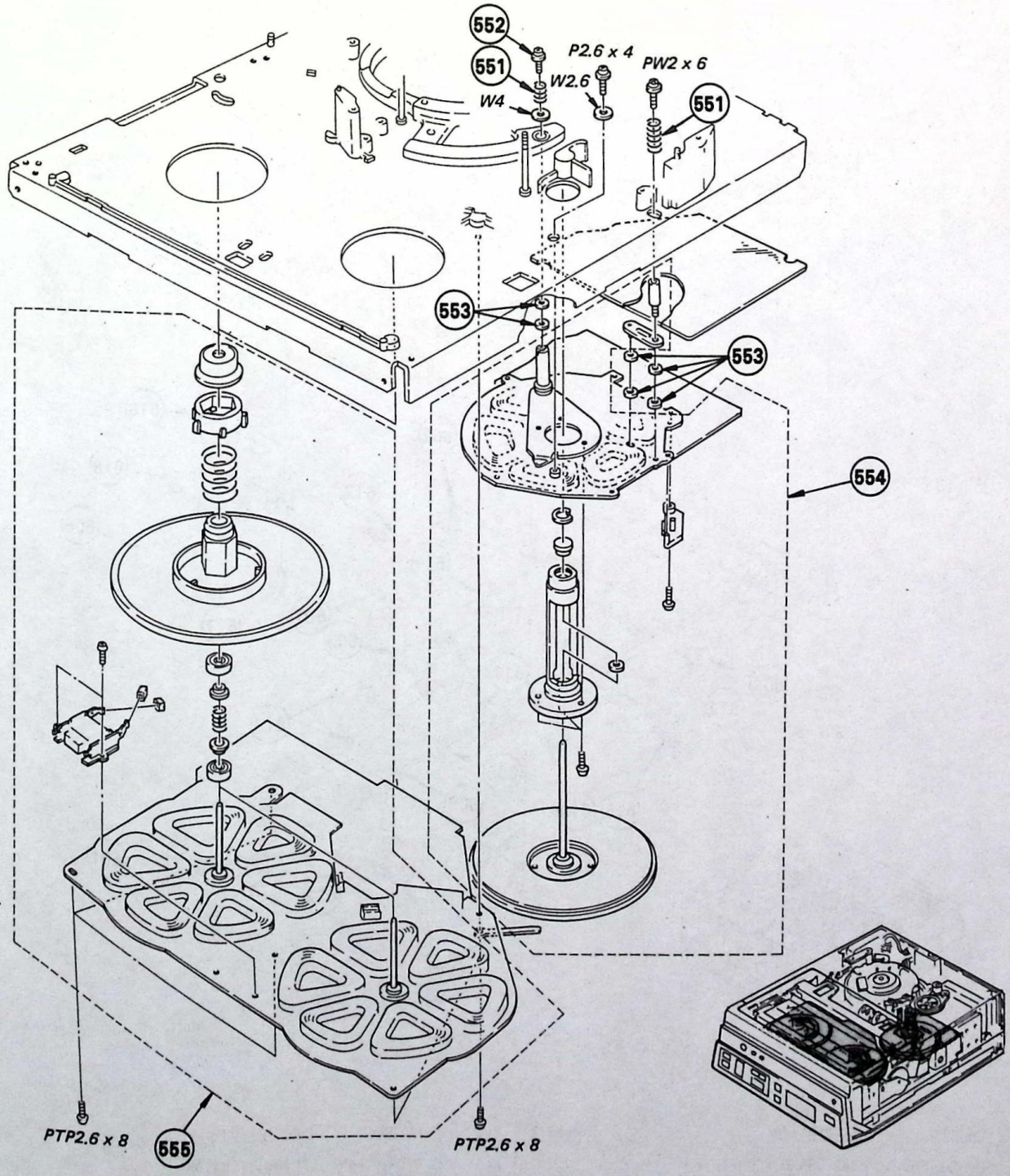

No.	Part No.	Description	Remark
551	3-669-607-11	+PSW (SMALL ROUND) (2.6)	
552	3-669-633-00	SCREW, + PW2	
553	3-669-697-00	SPACER, CAPSTAN	

No.	Part No.	Description	Remark
554	8-838-040-01	MOTOR, DC (BHF-1906A)	
555	⚠8-838-041-01	MOTOR, DC (BHF-1801A)	

The components identified by shading and mark ⚠ are critical for safety. Replace only with part number specified.

11-13. CASSETTE CONTROL LOCK ASSEMBLY

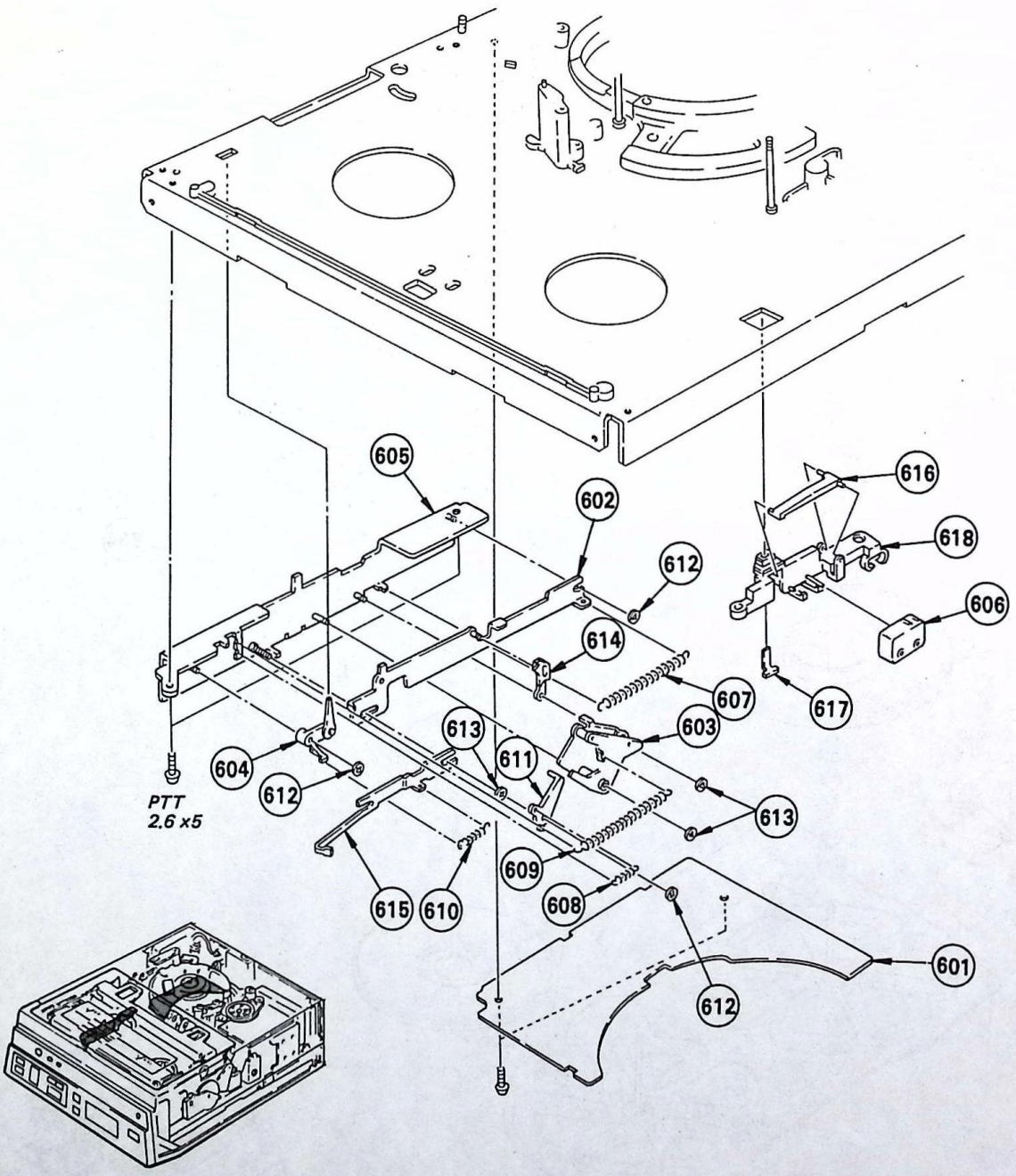

No.	Part No.	Description	Remark
601	*A-6711-560-A	MB-5 BOARD, COMPLETE	
602	*X-3669-376-0	PLATE ASSY, SLIDE, RELEASE	
603	*X-3669-377-0	LEVER ASSY, LOCK	
604	X-3678-811-0	LEVER ASSY, CI	
605	X-3678-817-0	CHASSIS ASSY, LOCK	
606	1-553-717-00	SWITCH, MICRO	
607	3-480-160-XX	SPRING, TENSION	
608	3-509-123-00	SPRING, TENSION	
609	3-489-310-XX	SPRING, TENSION	
610	3-570-896-00	SPRING, TENSION	
611	*3-669-414-00	LEVER, HOLDING, IL	
612	3-669-465-00	WASHER (1.5), STOPPER	
613	3-669-596-00	WASHER (2.3), STOPPER	
614	*3-669-670-00	LEVER, LOCK, L	
615	*3-678-854-00	PLATE, SLIDE, SWITCH	
616	3-678-893-00	ARM, MR	
617	3-678-894-00	PROBE, MR	
618	3-678-921-00	FRAME, MR	

11-14. RP-11 BOARD

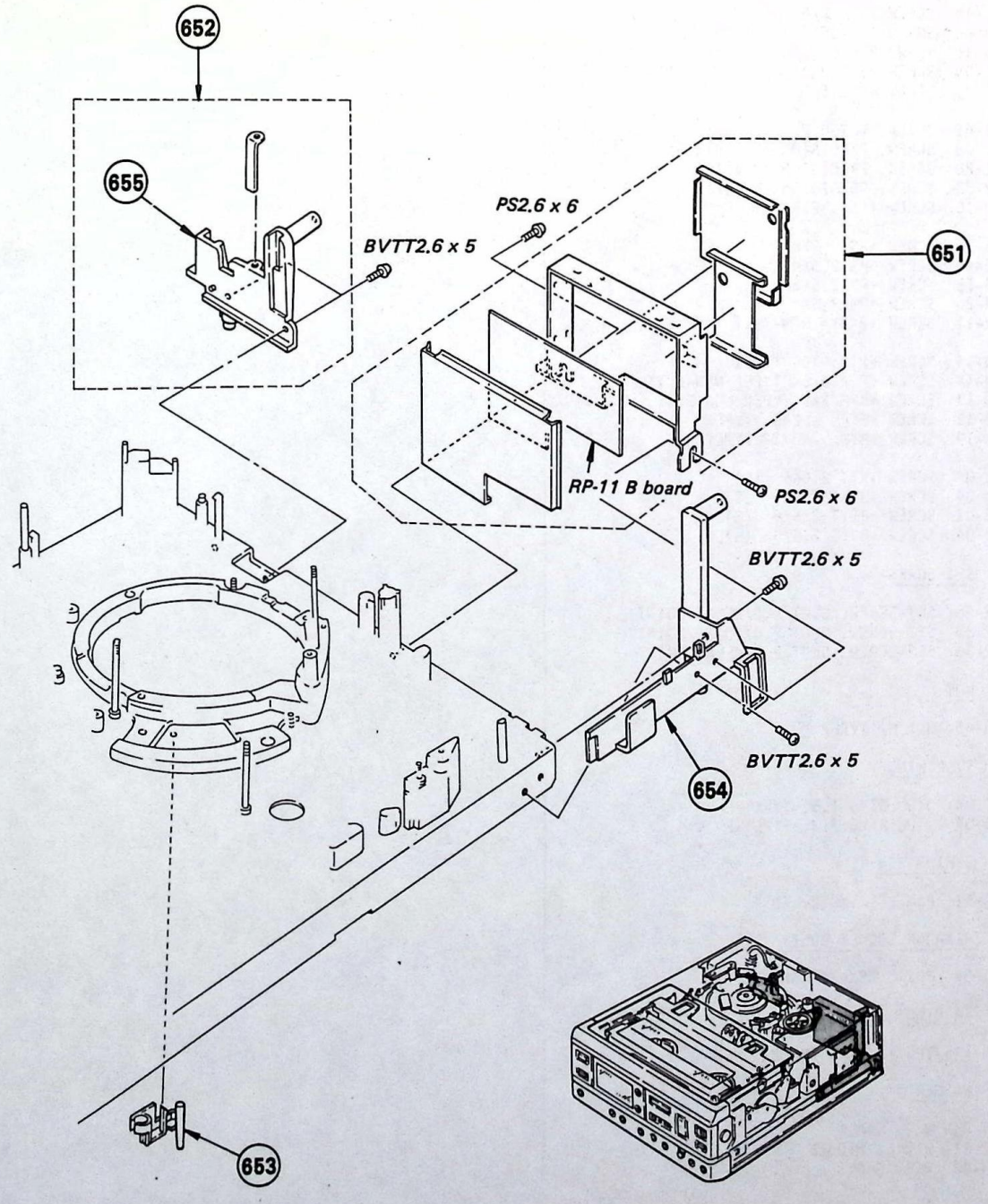

No.	Part No.	Description	Remark
651	*A-6711-402-A	RP-11 BOARD, COMPLETE	
652	*X-3678-832-0	FRAME (LEFT REAR) ASSY	
653	*3-678-856-00	STOPPER (MA)	
654	*3-678-908-00	FRAME(RIGHT REAR), MECH CHASSIS	
655	*3-678-909-00	FRAME (LEFT REAR), MECH CHASSIS	

11-15. HARD WARE LIST

SCREW

7-621-255-45 SCREW +P 2X6
7-621-773-86 SCREW +P 2.6X4
7-621-759-45 +PSW, 2.6X6
7-621-772-58 SCREW +B 2X10
7-621-775-00 SCREW +B 2.6X3

7-621-905-65 SCREW, TOTSU P 2X8
7-627-551-08 SCREW, PRECISION +P 1.4X1.6
7-627-551-28 SCREW, PRECISION +P 1.4X2.5
7-627-552-38 SCREW, PRECISION +P 1.7X3
7-628-253-15 SCREW +PS 2X5

7-628-253-35 SCREW +PS 2X8
7-628-253-95 SCREW +PS 2.6X4
7-628-254-15 SCREW +PS 2.6X6
7-628-254-25 SCREW +PS 2.6X8
7-685-102-11 SCREW +P 2X4 NON-SLIT TYPE 2

7-685-133-14 SCREW +P 2.6X6 TYPE1
7-685-134-14 SCREW +P 2.6X8 TYPE2 NON-SLIT
7-685-205-11 SCREW +KTP 2X8 TYPE2 NON-SLIT
7-685-504-11 SCREW +BTP 2X6 TYPE2
7-685-148-19 SCREW +BTP 3X12 TYPE2 N-S

7-685-791-04 SCREW +PTT 2.6X5 (S)
7-685-791-04 SCREW +BVTT 2.6X5 (S)
7-685-862-01 SCREW +BVTT 2.6X6 (S)
7-685-793-04 SCREW +BVTT 2.6X8 (S)

SET-SCREW

7-621-712-26 SET-SCREW, SLOT 2.6X3FLAT POINT
7-621-712-35 SET-SCREW, SLOT 2.6X4CONE POINT
7-621-712-36 SET-SCREW, SLOT 2.6X4FLAT POINT

NUT

7-622-205-05 NUT M2 TYPE2

STOP RING

7-624-102-04 STOP RING 1.5, TYPE -E
7-624-105-04 STOP RING 2.3, TYPE -E

SPRING PIN

7-626-317-21 PIN, SPRING 2.5X8

HEXAGON SOCKET BOLT

7-683-401-04 BOLT, HEXAGON SOCKET 3X4

TAPPING

7-685-105-14 TPG +P 2X8, TYPE 2, NON-SLIT

WASHER

7-688-001-01 W 2, SMALL
7-688-002-11 W 2.6, MIDDLE
7-688-004-02 W 4, SMALL

SECTION 12
ELECTRICAL PARTS LIST
(Projector:FP-60/62)

TABLE OF CONTENTS

Section	*Title*	*Page*
12.	**ELECTRICAL PARTS LIST**	
	BA Board	12-1
	BB Board	12-3
	P Board	12-7
	GA, GB and A Boards	12-10
	MB, MC and MA Boards	12-13
	C Board	12-14
	D Board	12-15
	V and T Boards	12-18
	Miscellaneous	12-19

PJ ELECTRICAL PARTS LIST

SECTION 12
ELECTRICAL PARTS LIST

BA

NOTE:

The components identified by shading and mark ⚠ are critical for safety. Replace only with part number specified.

When indicating parts by reference number, please include the board name.

· Items marked " * " are not stocked since they are seldom required for routine service. Some delay should be anticipated when ordering these items.

· All variable and adjustable resistors have characteristic curve B, unless otherwise noted.

CAPACITORS
· MF : μF, PF : μμF

RESISTORS
· All resistors are in ohms
· F : nonflammable

COILS
· MMH : mH, UH : μH

Ref.No.	Part No.	Description			Remark
	*A-1135-255-A	BA BOARD, COMPLETE **********			
	1-536-872-11	TERMINAL BOARD, INPUT/OUTPUT			
	4-373-088-01	SPACER (13X19), MICA			
	*4-373-091-01	CASE, SHIELD, DELAY LINE			
	*4-373-092-01	LID, SHIELD CASE, DELAY LINE			
		CONNECTOR			
BA1	*1-564-443-11	PLUG, CONNECTOR (2.5MM) 7P			
BA2	*1-564-443-11	PLUG, CONNECTOR (2.5MM) 7P			
BA3	*1-564-440-11	PLUG, CONNECTOR (2.5MM) 4P			
BA4	*1-564-443-11	PLUG, CONNECTOR (2.5MM) 7P			
BA5	*1-564-353-00	PLUG, CONNECTOR (2.5MM) 2P			
BA6	*1-564-440-11	PLUG, CONNECTOR (2.5MM) 4P			
BA7	*1-560-468-00	PIN, CONNECTOR 5P			
BA8	*1-560-467-00	PIN, CONNECTOR 4P			
BA9	*1-560-456-00	PIN, CONNECTOR 2P			
BA10	*1-560-456-00	PIN, CONNECTOR 2P			
BA11	*1-564-440-11	PLUG, CONNECTOR (2.5MM) 4P			
		CAPACITOR			
C301	1-123-380-00	ELECT	1MF	20% 50V	
C302	1-123-586-00	ELECT	0.1MF	20% 50V	
C303	1-102-074-00	CERAMIC	0.001MF	10% 50V	
C304	1-123-318-00	ELECT	33MF	20% 16V	
C305	1-123-380-00	ELECT	1MF	20% 50V	
C306	1-123-380-00	ELECT	1MF	20% 50V	
C307	1-123-318-00	ELECT	33MF	20% 16V	
C308	1-123-330-00	ELECT	22MF	20% 16V	
C309	1-123-336-00	ELECT	470MF	20% 25V	
C310	1-101-005-00	CERAMIC	0.022MF	50V	
C311	1-123-330-00	ELECT	22MF	20% 16V	
C312	1-123-330-00	ELECT	22MF	20% 16V	
C313	1-123-334-00	ELECT	220MF	20% 25V	
C314	1-123-318-00	ELECT	33MF	20% 16V	
C315	1-102-108-00	CERAMIC	150PF	10% 50V	
C316	1-101-004-00	CERAMIC	0.01MF	50V	
C317	1-123-332-00	ELECT	47MF	20% 16V	
C318	1-102-865-00	CERAMIC	8PF	0.5PF 50V	
C319	1-123-379-00	ELECT	0.47MF	20% 50V	
C320	1-123-379-00	ELECT	0.47MF	20% 50V	
C321	1-121-259-51	ELECT	10MF	16V	
C322	1-102-074-00	CERAMIC	0.001MF	10% 50V	
C323	1-123-447-00	ELECT	0.22MF	20% 50V	
C324	1-102-125-00	CERAMIC	0.0047MF	10% 50V	
C325	1-123-447-00	ELECT	0.22MF	20% 50V	
C326	1-161-264-00	CERAMIC	27PF	5% 50V	
C327	1-123-330-00	ELECT	22MF	20% 16V	
C328	1-101-880-00	CERAMIC	47PF	5% 50V	
C330	1-101-004-00	CERAMIC	0.01MF	50V	
C331	1-102-121-00	CERAMIC	0.0022MF	10% 50V	
C332	1-123-381-00	ELECT	2.2MF	20% 50V	
C333	1-123-332-00	ELECT	47MF	20% 16V	
C334	1-102-074-00	CERAMIC	0.001MF	10% 50V	
C335	1-123-286-00	ELECT	0.33MF	20% 50V	
C336	1-102-106-00	CERAMIC	100PF	10% 50V	
C337	1-161-313-00	CERAMIC	150PF	10% 50V	
C338	1-123-356-00	ELECT	10MF	20% 16V	
C339	1-123-330-00	ELECT	22MF	20% 16V	
C340	1-123-356-00	ELECT	10MF	20% 16V	
C341	1-123-380-00	ELECT	1MF	20% 50V	
C342	1-123-356-00	ELECT	10MF	20% 16V	
C343	1-102-107-00	CERAMIC	120PF	10% 50V	
C344	1-123-321-00	ELECT	220MF	20% 16V	
C345	1-102-107-00	CERAMIC	120PF	10% 50V	
C346	1-123-330-00	ELECT	22MF	20% 16V	
C347	1-123-356-00	ELECT	10MF	20% 16V	
C348	1-123-330-00	ELECT	22MF	20% 16V	
C349	1-123-318-00	ELECT	33MF	20% 16V	
C350	1-123-380-00	ELECT	1MF	20% 50V	
C351	1-123-380-00	ELECT	1MF	20% 50V	
C352	1-123-380-00	ELECT	1MF	20% 50V	
C354	1-123-380-00	ELECT	1MF	20% 50V	
C355	1-123-380-00	ELECT	1MF	20% 50V	
C356	1-106-184-00	MYLAR	0.0033MF	5% 50V	
C357	1-123-330-00	ELECT	22MF	20% 25V	
C358	1-123-332-00	ELECT	47MF	20% 16V	
C359	1-123-318-00	ELECT	33MF	20% 16V	
C360	1-102-074-00	CERAMIC	0.001MF	10% 50V	
C361	1-102-820-00	CERAMIC	330PF	5% 50V	
C362	1-101-005-00	CERAMIC	0.022MF	50V	
C363	1-102-976-00	CERAMIC	180PF	5% 50V	
C364	1-123-356-00	ELECT	10MF	20% 16V	
C365	1-123-661-00	ELECT	100MF	20% 6.3V	
		TRIMMER			
CV301	1-141-147-XX	CAP, TRIMMER			
		DIODE			
D301	8-719-911-19	DIODE 1SS119			
D302	8-719-911-19	DIODE 1SS119			
D303	8-719-911-19	DIODE 1SS119			
D304	8-719-911-19	DIODE 1SS119			
D305	8-719-100-55	DIODE RD9.1E-B3			
D306	8-719-911-19	DIODE 1SS119			
D307	8-719-911-19	DIODE 1SS119			
D308	8-719-911-19	DIODE 1SS119			
D309	8-719-100-56	DIODE RD10E-B1			
D310	8-719-100-56	DIODE RD10E-B1			
D311	8-719-100-20	DIODE RD3.9E-B1			
D312	8-719-100-20	DIODE RD3.9E-B1			
		DELAY LINE			
DL301	1-415-240-00	DELAY LINE			

BA

Ref.No.	Part No.	Description	Remark
		IC	
IC301	8-759-145-58	IC UPC4558C	
IC302	8-758-480-00	IC CX848	
IC303	8-759-208-94	IC CX894	
IC304	8-759-208-94	IC CX894	
		COIL	
L301	1-408-416-00	MICRO INDUCTOR 39UH	
L303	1-408-163-00	MICRO INDUCTOR 5.6MMH	
L304	1-408-398-00	MICRO INDUCTOR 1.2UH	
L305	1-408-398-00	MICRO INDUCTOR 1.2UH	
L306	1-408-398-00	MICRO INDUCTOR 1.2UH	
L307	1-407-712-00	MICRO INDUCTOR 390UH	
L308	1-407-695-00	MICRO INDUCTOR 15UH	
L309	1-407-705-00	MICRO INDUCTOR 100UH	
		TRANSISTOR	
Q301	8-729-245-83	TRANSISTOR 2SC2458	
Q302	8-729-245-83	TRANSISTOR 2SC2458	
Q303	8-729-188-23	TRANSISTOR 2SD882	
Q304	8-729-177-23	TRANSISTOR 2SB772	
Q305	8-729-245-83	TRANSISTOR 2SC2458	
Q306	8-729-245-83	TRANSISTOR 2SC2458	
Q307	8-729-245-83	TRANSISTOR 2SC2458	
Q308	8-729-245-83	TRANSISTOR 2SC2458	
Q309	8-729-245-83	TRANSISTOR 2SC2458	
Q310	8-729-245-83	TRANSISTOR 2SC2458	
Q311	8-729-204-83	TRANSISTOR 2SA1048GR	
Q312	8-729-245-83	TRANSISTOR 2SC2458	
Q313	8-729-245-83	TRANSISTOR 2SC2458	
Q314	8-729-245-83	TRANSISTOR 2SC2458	
		RESISTOR	
R301	1-247-871-00	CARBON 47K 5% 1/6W	
R302	1-247-847-00	CARBON 4.7K 5% 1/6W	
R303	1-247-879-00	CARBON 100K 5% 1/6W	
R304	1-247-857-00	CARBON 12K 5% 1/6W	
R305	1-247-861-00	CARBON 18K 5% 1/6W	
R306	1-247-809-00	CARBON 120 5% 1/6W	
R307	1-247-849-00	CARBON 5.6K 5% 1/6W	
R308	1-247-831-00	CARBON 1K 5% 1/6W	
R309	1-246-481-00	CARBON 2.2K 5% 1/4W	
R310	1-247-855-00	CARBON 10K 5% 1/6W	
R311	1-247-863-00	CARBON 22K 5% 1/6W	
R312	1-247-841-00	CARBON 2.7K 5% 1/6W	
R313	1-247-855-00	CARBON 10K 5% 1/6W	
R314	1-247-813-00	CARBON 180 5% 1/6W	
R315	1-247-847-00	CARBON 4.7K 5% 1/6W	
R316	1-247-587-00	CARBON 0.47 5% 1/4W	
R317	1-247-638-00	CARBON 0.68 5% 1/8W	F
R318	1-247-831-00	CARBON 1K 5% 1/6W	
R319	1-247-638-00	CARBON 0.68 5% 1/8W	F
R320	1-246-457-00	CARBON 220 5% 1/4W	

Ref.No.	Part No.	Description	Remark
R321	1-247-867-00	CARBON 33K 5% 1/6W	
R322	1-247-847-00	CARBON 4.7K 5% 1/6W	
R323	1-247-133-00	CARBON 1.2K 5% 1/4W	
R324	1-247-837-00	CARBON 1.8K 5% 1/6W	
R325	1-247-855-00	CARBON 10K 5% 1/6W	
R326	1-247-837-00	CARBON 1.8K 5% 1/6W	
R327	1-247-827-00	CARBON 680 5% 1/6W	
R328	1-247-807-00	CARBON 100 5% 1/6W	
R329	1-247-821-00	CARBON 390 5% 1/6W	
R330	1-247-829-00	CARBON 820 5% 1/6W	
R331	1-247-863-00	CARBON 22K 5% 1/6W	
R332	1-247-855-00	CARBON 10K 5% 1/6W	
R333	1-247-807-00	CARBON 100 5% 1/6W	
R334	1-247-807-00	CARBON 100 5% 1/6W	
R335	1-247-807-00	CARBON 100 5% 1/6W	
R336	1-247-839-00	CARBON 2.2K 5% 1/6W	
R337	1-247-839-00	CARBON 2.2K 5% 1/6W	
R338	1-247-839-00	CARBON 2.2K 5% 1/6W	
R340	1-247-806-00	CARBON 91 5% 1/6W	
R341	1-247-823-00	CARBON 470 5% 1/6W	
R342	1-247-843-00	CARBON 3.3K 5% 1/6W	
R343	1-247-855-00	CARBON 10K 5% 1/6W	
R344	1-247-831-00	CARBON 1K 5% 1/6W	
R345	1-247-831-00	CARBON 1K 5% 1/6W	
R346	1-247-879-00	CARBON 100K 5% 1/6W	
R347	1-247-857-00	CARBON 12K 5% 1/6W	
R348	1-247-831-00	CARBON 1K 5% 1/6W	
R349	1-247-855-00	CARBON 10K 5% 1/6W	
R350	1-247-855-00	CARBON 10K 5% 1/6W	
R351	1-247-807-00	CARBON 100 5% 1/6W	
R352	1-247-107-00	CARBON 100 5% 1/4W	
R353	1-247-807-00	CARBON 100 5% 1/6W	
R354	1-247-807-00	CARBON 100 5% 1/6W	
R355	1-247-807-00	CARBON 100 5% 1/6W	
R356	1-247-807-00	CARBON 100 5% 1/6W	
R357	1-247-835-00	CARBON 1.5K 5% 1/6W	
R358	1-247-855-00	CARBON 10K 5% 1/6W	
R359	1-247-839-00	CARBON 2.2K 5% 1/6W	
R360	1-247-831-00	CARBON 1K 5% 1/6W	
R361	1-247-831-00	CARBON 1K 5% 1/6W	
R362	1-247-841-00	CARBON 2.7K 5% 1/6W	
R363	1-247-831-00	CARBON 1K 5% 1/6W	
R364	1-247-831-00	CARBON 1K 5% 1/6W	
R365	1-246-456-00	CARBON 200 5% 1/4W	
R366	1-247-835-00	CARBON 1.5K 5% 1/6W	
R367	1-247-807-00	CARBON 100 5% 1/6W	
R368	1-247-155-00	CARBON 10K 5% 1/4W	
R369	1-247-859-00	CARBON 15K 5% 1/6W	
R370	1-247-855-00	CARBON 10K 5% 1/6W	
R371	1-247-855-00	CARBON 10K 5% 1/6W	
R372	1-247-863-00	CARBON 22K 5% 1/6W	
R373	1-247-847-00	CARBON 4.7K 5% 1/6W	

Ref.No.	Part No.	Description				Remark
R374	1-247-859-00	CARBON	15K	5%	1/6W	
R375	1-247-843-00	CARBON	3.3K	5%	1/6W	
R376	1-247-835-00	CARBON	1.5K	5%	1/6W	
R377	1-247-831-00	CARBON	1K	5%	1/6W	
R378	1-247-831-00	CARBON	1K	5%	1/6W	
R379	1-247-855-00	CARBON	10K	5%	1/6W	
R380	1-247-804-00	CARBON	75	5%	1/6W	
R381	1-247-804-00	CARBON	75	5%	1/6W	
R382	1-247-869-00	CARBON	39K	5%	1/6W	
R383	1-247-899-00	CARBON	680K	5%	1/6W	
R384	1-247-869-00	CARBON	39K	5%	1/6W	
R385	1-247-863-00	CARBON	22K	5%	1/6W	
R386	1-247-831-00	CARBON	1K	5%	1/6W	
R387	1-247-851-00	CARBON	6.8K	5%	1/6W	
R388	1-247-857-00	CARBON	12K	5%	1/6W	
R389	1-247-851-00	CARBON	6.8K	5%	1/6W	
R390	1-247-871-00	CARBON	47K	5%	1/6W	
R391	1-247-857-00	CARBON	12K	5%	1/6W	
R392	1-247-871-00	CARBON	47K	5%	1/6W	
R393	1-247-831-00	CARBON	1K	5%	1/6W	
R394	1-247-823-00	CARBON	470	5%	1/6W	
R395	1-247-024-00	CARBON	2.7	5%	1/8W	F
R396	1-247-879-00	CARBON	100K	5%	1/6W	
R397	1-247-841-00	CARBON	2.7K	5%	1/6W	
R398	1-247-855-00	CARBON	10K	5%	1/6W	
R399	1-247-863-00	CARBON	22K	5%	1/6W	
R3001	1-247-871-00	CARBON	47K	5%	1/6W	
		VARIABLE RESISTOR				
RV301	1-228-540-00	RES, VAR, CARBON 10K				
RV302	1-228-539-00	RES, VAR, CARBON 10K				
RV303	1-228-539-00	RES, VAR, CARBON 10K				
RV304	1-228-539-00	RES, VAR, CARBON 10K				
RV305	1-228-724-00	RES, ADJ, CERAMIC CARBON 10K				
RV306	1-228-724-00	RES, ADJ, CERAMIC CARBON 10K				
RV307	1-228-724-00	RES, ADJ, CERAMIC CARBON 10K				
RV308	1-228-539-00	RES, VAR, CARBON 10K				
RV310	1-228-719-00	RES, ADJ, CERAMIC CARBON 470				
		SWITCH				
S301	1-552-656-00	SWITCH, SLIDE				
S302	1-552-656-00	SWITCH, SLIDE				
		TRANSFORMER				
T301	1-426-138-00	TRANSFORMER, INPUT				
		CRYSTAL				
X301	1-527-722-00	OSCILLATOR, CRYSTAL				

Ref.No.	Part No.	Description			Remark
	*A-1135-256-A	BB BOARD, COMPLETE **********			
		CONNECTOR			
BB1	*1-564-443-11	PLUG, CONNECTOR (2.5MM) 7P			
BB2	*1-564-354-00	PLUG, CONNECTOR (2.5MM) 3P			
BB3	*1-564-444-11	PLUG, CONNECTOR (2.5MM) 8P			
BB4	*1-564-353-00	PLUG, CONNECTOR (2.5MM) 2P			
BB5	*1-564-353-00	PLUG, CONNECTOR (2.5MM) 2P			
BB6	*1-564-353-00	PLUG, CONNECTOR (2.5MM) 2P			
BB7	*1-564-354-00	PLUG, CONNECTOR (2.5MM) 3P			
BB8	*1-564-354-00	PLUG, CONNECTOR (2.5MM) 3P			
BB9	*1-564-353-00	PLUG, CONNECTOR (2.5MM) 2P			
BB10	*1-564-353-00	PLUG, CONNECTOR (2.5MM) 2P			
BB11	*1-526-575-00	SOCKET, PLUG 1P			
		CAPACITOR			
C801	1-103-735-00	POLYSTYRENE	0.0027MF	5%	50V
C802	1-104-085-11	POLYSTYRENE	0.0022MF	5%	50V
C803	1-101-005-00	CERAMIC	0.022MF		50V
C805	1-101-005-00	CERAMIC	0.022MF		50V
C807	1-123-356-00	ELECT	10MF	20%	16V
C808	1-101-005-00	CERAMIC	0.022MF		50V
C809	1-102-947-00	CERAMIC	10PF	5%	50V
C810	1-101-005-00	CERAMIC	0.022MF		50V
C811	1-102-965-00	CERAMIC	39PF	5%	50V
C812	1-101-005-00	CERAMIC	0.022MF		50V
C814	1-123-332-00	ELECT	47MF	20%	16V
C815	1-101-005-00	CERAMIC	0.022MF		50V
C816	1-101-005-00	CERAMIC	0.022MF		50V
C817	1-102-973-00	CERAMIC	100PF	5%	50V
C818	1-123-356-00	ELECT	10MF	20%	16V
C819	1-123-356-00	ELECT	10MF	20%	16V
C820	1-101-005-00	CERAMIC	0.022MF		50V
C821	1-102-973-00	CERAMIC	100PF	5%	50V
C822	1-101-005-00	CERAMIC	0.022MF		50V
C823	1-101-005-00	CERAMIC	0.022MF		50V
C824	1-101-005-00	CERAMIC	0.022MF		50V
C825	1-101-005-00	CERAMIC	0.022MF		50V
C826	1-101-005-00	CERAMIC	0.022MF		50V
C827	1-101-005-00	CERAMIC	0.022MF		50V
C828	1-101-005-00	CERAMIC	0.022MF		50V
C829	1-102-973-00	CERAMIC	100PF	5%	50V
C830	1-123-356-00	ELECT	10MF	20%	16V
C831	1-123-356-00	ELECT	10MF	20%	16V
C832	1-101-005-00	CERAMIC	0.022MF		50V
C833	1-102-973-00	CERAMIC	100PF	5%	50V
C834	1-101-005-00	CERAMIC	0.022MF		50V
C835	1-123-356-00	ELECT	10MF	20%	16V
C836	1-101-005-00	CERAMIC	0.022MF		50V
C837	1-101-005-00	CERAMIC	0.022MF		50V
C838	1-123-356-00	ELECT	10MF	20%	16V

BB

Ref.No.	Part No.	Description			Remark
C839	1-123-356-00	ELECT	10MF	20%	16V
C840	1-123-356-00	ELECT	10MF	20%	16V
C841	1-123-356-00	ELECT	10MF	20%	16V
C842	1-102-116-00	CERAMIC	680PF	10%	50V
C843	1-102-116-00	CERAMIC	680PF	10%	50V
C844	1-123-356-00	ELECT	10MF	20%	35V
C845	1-123-356-00	ELECT	10MF	20%	16V
C846	1-101-005-00	CERAMIC	0.022MF		50V
C847	1-102-978-00	CERAMIC	220PF	5%	50V
C849	1-123-356-00	ELECT	10MF	20%	16V
C850	1-130-471-00	MYLAR	0.001MF	5%	50V
C851	1-101-005-00	CERAMIC	0.022MF		50V
C852	1-123-356-00	ELECT	10MF	20%	16V
C853	1-101-005-00	CERAMIC	0.022MF		50V
C854	1-102-121-00	CERAMIC	0.0022MF	10%	50V
C855	1-123-333-00	ELECT	100MF	20%	16V
C856	1-101-005-00	CERAMIC	0.022MF		50V
C857	1-102-959-00	CERAMIC	22PF	5%	50V
C858	1-102-971-00	CERAMIC	82PF	5%	50V
C859	1-102-123-00	CERAMIC	0.0033MF	10%	50V
C860	1-102-973-00	CERAMIC	100PF	5%	50V
C861	1-102-935-00	CERAMIC	2PF	0.25PF	50V
C862	1-102-754-00	CERAMIC	39PF	5%	50V
C863	1-102-754-00	CERAMIC	39PF	5%	50V
C864	1-123-330-00	ELECT	22MF	20%	16V
C865	1-101-882-00	CERAMIC	51PF	5%	50V
C866	1-123-382-00	ELECT	3.3MF	20%	50V
C867	1-130-489-00	MYLAR	0.033MF	5%	50V
C868	1-101-005-00	CERAMIC	0.022MF		50V
C869	1-123-318-00	ELECT	33MF	20%	10V
C870	1-102-949-00	CERAMIC	12PF	5%	50V
C872	1-102-980-00	CERAMIC	270PF	5%	50V
C873	1-102-980-00	CERAMIC	270PF	5%	50V
C874	1-102-980-00	CERAMIC	270PF	5%	50V
C875	1-101-886-00	CERAMIC	62PF	5%	50V
C876	1-101-886-00	CERAMIC	62PF	5%	50V
C877	1-101-886-00	CERAMIC	62PF	5%	50V
C878	1-101-005-00	CERAMIC	0.022MF		50V
C879	1-101-005-00	CERAMIC	0.022MF		50V
C880	1-123-307-00	ELECT	100MF	20%	6.3V
C881	1-101-005-00	CERAMIC	0.022MF		50V
C882	1-123-332-00	ELECT	47MF	20%	16V
C884	1-101-005-00	CERAMIC	0.022MF		50V
C885	1-123-332-00	ELECT	47MF	20%	16V
C886	1-101-005-00	CERAMIC	0.022MF		50V
C887	1-102-978-00	CERAMIC	220PF	5%	50V
C888	1-102-820-00	CERAMIC	330PF	5%	50V
C889	1-101-005-00	CERAMIC	0.022MF		50V
C890	1-123-447-00	ELECT	0.22MF	20%	50V
C891	1-123-356-00	ELECT	10MF	20%	16V
C892	1-101-005-00	CERAMIC	0.022MF		50V
C893	1-123-231-00	ELECT	3.3MF	20%	50V
C894	1-123-332-00	ELECT	47MF	20%	25V
C895	1-123-332-00	ELECT	47MF	20%	25V
C896	1-101-005-00	CERAMIC	0.022MF		50V
C897	1-123-330-00	ELECT	22MF	20%	16V
C898	1-101-005-00	CERAMIC	0.022MF		50V
C899	1-123-306-00	ELECT	47MF	20%	6.3V
C900	1-123-306-00	ELECT	47MF	20%	6.3V
C901	1-102-074-00	CERAMIC	0.001MF	10%	50V
C902	1-101-005-00	CERAMIC	0.022MF		50V
C903	1-161-494-00	CERAMIC	0.022MF	30%	25V
C904	1-161-494-00	CERAMIC	0.022MF	30%	25V
C905	1-161-494-00	CERAMIC	0.022MF	30%	25V
C906	1-123-306-00	ELECT	47MF		16V

TRIMMER

CV801	1-141-276-00	CAP, TRIMMER

DIODE

D801	8-719-815-55	DIODE 1S1555
D802	8-719-815-55	DIODE 1S1555
D803	8-719-815-55	DIODE 1S1555
D804	8-719-815-55	DIODE 1S1555
D805	8-719-815-55	DIODE 1S1555
D806	8-719-815-55	DIODE 1S1555
D807	8-719-815-55	DIODE 1S1555
D808	8-719-815-55	DIODE 1S1555
D809	8-719-815-55	DIODE 1S1555
D810	8-719-815-55	DIODE 1S1555
D811	8-719-911-06	DIODE 1SS106
D812	8-719-100-38	DIODE RD6.2E-B2
D813	8-719-100-96	DIODE RD27E-B4
D814	8-719-102-91	DIODE RD10E-N3
D815	8-719-100-38	DIODE RD6.2E-B2
D816	8-719-911-06	DIODE 1SS106
D817	8-719-815-55	DIODE 1S1555
D818	8-719-815-55	DIODE 1S1555
D819	8-719-815-55	DIODE 1S1555
D820	8-719-101-98	DIODE 1SS97
D821	8-719-101-98	DIODE 1SS97
D822	8-719-101-98	DIODE 1SS97
D823	8-719-101-98	DIODE 1SS97
D824	8-719-815-55	DIODE 1S1555
D825	8-719-815-55	DIODE 1S1555
D826	8-719-101-98	DIODE 1SS97
D827	8-719-101-98	DIODE 1SS97
D829	8-719-911-06	DIODE 1SS106
D830	8-719-911-06	DIODE 1SS106
D831	8-719-911-06	DIODE 1SS106
D832	8-719-911-06	DIODE 1SS106
D833	8-719-911-06	DIODE 1SS106
D834	8-719-911-06	DIODE 1SS106
D835	8-719-815-55	DIODE 1S1555
D836	⚠8-719-100-38	DIODE RD6.2E-B2
D837	⚠8-719-100-38	DIODE RD6.2E-B2

NOTE:

The components identified by shading and mark ⚠ are critical for safety. Replace only with part number specified.

Ref.No.	Part No.	Description	Remark
D838	8-719-815-55	DIODE 1S1555	
		IC	
IC801	8-759-905-69	IC NE564N	
IC802	8-759-907-10	IC TL710CP	
IC803	8-759-240-66	IC TC4066BP	
IC804	8-759-132-40	IC UPC324C	
IC805	8-759-900-04	IC SN74LS04N	
IC806	8-759-974-05	IC SN7405N	
IC807	8-759-901-12	IC SN74LS112AN	
IC808	8-759-901-12	IC SN74LS112AN	
IC809	8-759-901-75	IC SN74LS175N	
IC810	8-759-900-00	IC SN74LS00N	
IC811	8-759-900-00	IC SN74LS00N	
IC812	8-759-900-09	IC SN74LS09N	
IC813	8-759-900-09	IC SN74LS09N	
IC814	8-759-981-00	IC TL081CP	
IC815	8-759-903-93	IC SN74LS393N	
IC816	8-759-903-93	IC SN74LS393N	
IC817	8-759-903-93	IC SN74LS393N	
IC818	8-759-900-00	IC SN74LS00N	
IC819	8-759-900-10	IC SN74LS10N	
		COIL	
L801	1-408-409-00	MICRO INDUCTOR 10UH	
L802	1-408-405-00	MICRO INDUCTOR 4.7UH	
L803	1-408-405-00	MICRO INDUCTOR 4.7UH	
L804	1-408-412-00	MICRO INDUCTOR 18UH	
L805	1-408-412-00	MICRO INDUCTOR 18UH	
L806	1-408-412-00	MICRO INDUCTOR 18UH	
L807	1-408-412-00	MICRO INDUCTOR 18UH	
L808	1-407-693-00	MICRO INDUCTOR 10UH	
		TRANSISTOR	
Q801	8-729-603-50	TRANSISTOR 2SC403SP	
Q802	8-729-603-50	TRANSISTOR 2SC403SP	
Q803	8-729-603-50	TRANSISTOR 2SC403SP	
Q804	8-729-204-83	TRANSISTOR 2SA1048GR	
Q805	8-729-603-50	TRANSISTOR 2SC403SP	
Q806	8-729-603-50	TRANSISTOR 2SC403SP	
Q807	8-729-603-50	TRANSISTOR 2SC403SP	
Q808	8-729-603-50	TRANSISTOR 2SC403SP	
Q809	8-729-603-50	TRANSISTOR 2SC403SP	
Q810	8-729-603-50	TRANSISTOR 2SC403SP	
Q811	8-729-603-50	TRANSISTOR 2SC403SP	
Q812	8-729-603-50	TRANSISTOR 2SC403SP	
Q813	8-729-603-50	TRANSISTOR 2SC403SP	
Q814	8-729-603-50	TRANSISTOR 2SC403SP	
Q815	8-729-603-50	TRANSISTOR 2SC403SP	
Q816	8-729-603-50	TRANSISTOR 2SC403SP	
Q817	8-729-245-83	TRANSISTOR 2SC2458	
Q818	8-729-204-83	TRANSISTOR 2SA1048GR	
Q819	8-729-245-83	TRANSISTOR 2SC2458	

Ref.No.	Part No.	Description	Remark
Q820	8-729-255-12	TRANSISTOR 2SC2551	
Q821	8-729-245-83	TRANSISTOR 2SC2458	
Q822	8-729-603-50	TRANSISTOR 2SC403SP	
Q823	8-729-245-83	TRANSISTOR 2SC2458	
Q824	8-729-245-83	TRANSISTOR 2SC2458	
Q825	8-729-245-83	TRANSISTOR 2SC2458	
Q826	8-729-245-83	TRANSISTOR 2SC2458	
Q827	8-729-245-83	TRANSISTOR 2SC2458	
Q828	8-729-204-83	TRANSISTOR 2SA1048GR	
Q829	8-729-245-83	TRANSISTOR 2SC2458	
Q830	8-729-204-83	TRANSISTOR 2SA1048GR	
Q831	8-729-204-83	TRANSISTOR 2SA1048GR	
Q832	8-729-245-83	TRANSISTOR 2SC2458	
Q833	8-729-245-83	TRANSISTOR 2SC2458	
Q834	8-729-245-83	TRANSISTOR 2SC2458	
Q835	8-729-245-83	TRANSISTOR 2SC2458	
Q836	8-729-204-83	TRANSISTOR 2SA1048GR	
Q837 ⚠	8-729-117-54	TRANSISTOR 2SA1175	
Q838	8-729-245-83	TRANSISTOR 2SC2458	
Q839	8-729-245-83	TRANSISTOR 2SC2458	
		RESISTOR	
R801	1-247-783-00	CARBON 10 5% 1/6W	
R802	1-247-783-00	CARBON 10 5% 1/6W	
R803	1-247-843-00	CARBON 3.3K 5% 1/6W	
R804	1-247-813-00	CARBON 180 5% 1/6W	
R805	1-247-847-00	CARBON 4.7K 5% 1/6W	
R806	1-247-839-00	CARBON 2.2K 5% 1/6W	
R807	1-247-825-00	CARBON 560 5% 1/6W	
R808	1-247-807-00	CARBON 100 5% 1/6W	
R809	1-247-807-00	CARBON 100 5% 1/6W	
R810	1-247-821-00	CARBON 390 5% 1/6W	
R811	1-247-827-00	CARBON 680 5% 1/6W	
R812	1-247-815-00	CARBON 220 5% 1/6W	
R813	1-247-817-00	CARBON 270 5% 1/6W	
R814	1-247-823-00	CARBON 470 5% 1/6W	
R815	1-247-855-00	CARBON 10K 5% 1/6W	
R816	1-247-843-00	CARBON 3.3K 5% 1/6W	
R817	1-247-099-00	CARBON 47 5% 1/4W	
R818	1-247-823-00	CARBON 470 5% 1/6W	
R819	1-247-843-00	CARBON 3.3K 5% 1/6W	
R820	1-247-119-00	CARBON 330 5% 1/4W	
R821	1-247-835-00	CARBON 1.5K 5% 1/6W	
R822	1-247-849-00	CARBON 5.6K 5% 1/6W	
R823	1-247-817-00	CARBON 270 5% 1/6W	
R824	1-247-849-00	CARBON 5.6K 5% 1/6W	
R825	1-247-833-00	CARBON 1.2K 5% 1/6W	
R826	1-247-815-00	CARBON 220 5% 1/6W	
R827	1-247-843-00	CARBON 3.3K 5% 1/6W	
R828	1-247-807-00	CARBON 100 5% 1/6W	
R829	1-247-829-00	CARBON 820 5% 1/6W	
R830	1-247-801-00	CARBON 56 5% 1/6W	
R831	1-247-801-00	CARBON 56 5% 1/6W	

NOTE:

The components identified by shading and mark ⚠ are critical for safety. Replace only with part number specified.

BB

Ref.No.	Part No.	Description				Remark
R832	1-247-815-00	CARBON	220	5%	1/6W	
R833	1-247-831-00	CARBON	1K	5%	1/6W	
R834	1-247-843-00	CARBON	3.3K	5%	1/6W	
R835	1-247-815-00	CARBON	220	5%	1/6W	
R836	1-247-829-00	CARBON	820	5%	1/6W	
R837	1-247-801-00	CARBON	56	5%	1/6W	
R838	1-247-807-00	CARBON	100	5%	1/6W	
R839	1-247-815-00	CARBON	220	5%	1/6W	
R840	1-247-831-00	CARBON	1K	5%	1/6W	
R841	1-247-843-00	CARBON	3.3K	5%	1/6W	
R842	1-247-829-00	CARBON	820	5%	1/6W	
R843	1-247-807-00	CARBON	100	5%	1/6W	
R844	1-247-801-00	CARBON	56	5%	1/6W	
R845	1-247-815-00	CARBON	220	5%	1/6W	
R846	1-247-829-00	CARBON	820	5%	1/6W	
R847	1-247-801-00	CARBON	56	5%	1/6W	
R848	1-247-131-00	CARBON	1K	5%	1/4W	
R849	1-247-831-00	CARBON	1K	5%	1/6W	
R850	1-247-843-00	CARBON	3.3K	5%	1/6W	
R851	1-247-807-00	CARBON	100	5%	1/6W	
R852	1-247-829-00	CARBON	820	5%	1/6W	
R853	1-247-815-00	CARBON	220	5%	1/6W	
R854	1-247-815-00	CARBON	220	5%	1/6W	
R855	1-247-831-00	CARBON	1K	5%	1/6W	
R856	1-247-839-00	CARBON	2.2K	5%	1/6W	
R857	1-247-831-00	CARBON	1K	5%	1/6W	
R858	1-247-817-00	CARBON	270	5%	1/6W	
R859	1-247-829-00	CARBON	820	5%	1/6W	
R860	1-247-127-00	CARBON	680	5%	1/4W	
R861	1-247-839-00	CARBON	2.2K	5%	1/6W	
R862	1-247-847-00	CARBON	4.7K	5%	1/6W	
R863	1-247-107-00	CARBON	100	5%	1/4W	
R864	1-247-107-00	CARBON	100	5%	1/4W	
R865	1-246-481-00	CARBON	2.2K	5%	1/4W	
R866	1-247-179-00	CARBON	100K	5%	1/4W	
R867	1-247-791-00	CARBON	22	5%	1/6W	
R868	1-247-903-00	CARBON	1M	5%	1/6W	
R869	1-247-843-00	CARBON	3.3K	5%	1/6W	
R870	1-247-827-00	CARBON	680	5%	1/6W	
R871	1-247-107-00	CARBON	100	5%	1/4W	
R872	1-247-855-00	CARBON	10K	5%	1/6W	
R873	1-246-505-00	CARBON	22K	5%	1/4W	
R874	1-247-141-00	CARBON	2.7K	5%	1/4W	
R875	1-247-903-00	CARBON	1M	5%	1/6W	
R876	1-247-903-00	CARBON	1M	5%	1/6W	
R877	1-247-859-00	CARBON	15K	5%	1/6W	
R879	1-247-863-00	CARBON	22K	5%	1/6W	
R880	1-246-493-25	CARBON	6.8K	5%	1/4W	
R881	1-247-841-00	CARBON	2.7K	5%	1/6W	
R882	1-247-155-00	CARBON	10K	5%	1/4W	
R883	1-247-155-00	CARBON	10K	5%	1/4W	
R884	1-247-807-00	CARBON	100	5%	1/6W	
R885	1-247-831-00	CARBON	1K	5%	1/6W	
R886	1-247-831-00	CARBON	1K	5%	1/6W	
R887	1-247-831-00	CARBON	1K	5%	1/6W	
R888	1-246-457-00	CARBON	220	5%	1/4W	
R889	1-247-839-00	CARBON	2.2K	5%	1/6W	
R890	1-247-833-00	CARBON	1.2K	5%	1/6W	
R891	1-247-855-00	CARBON	10K	5%	1/6W	
R892	1-247-855-00	CARBON	10K	5%	1/6W	
R893	1-247-831-00	CARBON	1K	5%	1/6W	
R894	1-247-119-00	CARBON	330	5%	1/4W	
R895	1-247-839-00	CARBON	2.2K	5%	1/6W	
R896	1-247-155-00	CARBON	10K	5%	1/4W	
R897	1-247-833-00	CARBON	1.2K	5%	1/6W	
R898	1-247-155-00	CARBON	10K	5%	1/4W	
R900	1-247-839-00	CARBON	2.2K	5%	1/6W	
R901	1-247-831-00	CARBON	1K	5%	1/6W	
R902	1-247-155-00	CARBON	10K	5%	1/4W	
R903	1-246-481-00	CARBON	2.2K	5%	1/4W	
R904	1-247-839-00	CARBON	2.2K	5%	1/6W	
R905	1-247-831-00	CARBON	1K	5%	1/6W	
R906	1-247-831-00	CARBON	1K	5%	1/6W	
R907	1-247-833-00	CARBON	1.2K	5%	1/6W	
R908	1-247-859-00	CARBON	15K	5%	1/6W	
R909	1-247-851-00	CARBON	6.8K	5%	1/6W	
R910	1-247-845-00	CARBON	3.9K	5%	1/6W	
R911	1-247-809-00	CARBON	120	5%	1/6W	
R912	1-247-845-00	CARBON	3.9K	5%	1/6W	
R913	1-247-809-00	CARBON	120	5%	1/6W	
R914	1-247-845-00	CARBON	3.9K	5%	1/6W	
R915	1-247-809-00	CARBON	120	5%	1/6W	
R916	1-247-807-00	CARBON	100	5%	1/6W	
R917	1-247-637-00	CARBON	0.56	5%	1/8W	F
R918	1-247-024-00	CARBON	2.7	5%	1/8W	F
R919	1-247-783-00	CARBON	10	5%	1/6W	
R920	1-247-813-00	CARBON	180	5%	1/6W	
R921	1-247-799-00	CARBON	47	5%	1/6W	
R922	1-247-807-00	CARBON	100	5%	1/6W	
R923	1-246-465-25	CARBON	470	5%	1/4W	
R924	1-246-525-00	CARBON	150K	5%	1/4W	
R925	1-247-845-00	CARBON	3.9K	5%	1/6W	
R926	1-247-845-00	CARBON	3.9K	5%	1/6W	
R927	1-246-501-25	CARBON	15K	5%	1/4W	
R928	1-247-845-00	CARBON	3.9K	5%	1/6W	
R929	1-247-141-00	CARBON	2.7K	5%	1/4W	
R930	1-247-855-00	CARBON	10K	5%	1/6W	
R931	1-247-871-00	CARBON	47K	5%	1/6W	
R933	⚠ 1-215-449-31	METAL	15K	1%	1/6W	
R934	1-247-849-00	CARBON	5.6K	5%	1/6W	
R935	1-246-501-25	CARBON	15K	5%	1/4W	
R936	1-247-851-00	CARBON	6.8K	5%	1/6W	
R937	1-246-499-00	CARBON	12K	5%	1/4W	
R938	1-247-857-00	CARBON	12K	5%	1/6W	
R939	1-247-863-00	CARBON	22K	5%	1/6W	
R940	1-247-831-00	CARBON	1K	5%	1/6W	

Ref.No.	Part No.	Description				Remark
R941	1-247-831-00	CARBON	1K	5%	1/6W	
R942	1-247-831-00	CARBON	1K	5%	1/6W	
R943	1-247-131-00	CARBON	1K	5%	1/4W	
R944	1-247-131-00	CARBON	1K	5%	1/4W	
R945	1-247-831-00	CARBON	1K	5%	1/6W	
R946	1-247-831-00	CARBON	1K	5%	1/6W	
R947	1-247-855-00	CARBON	10K	5%	1/6W	
R948	1-247-831-00	CARBON	1K	5%	1/6W	
R949	1-247-815-00	CARBON	220	5%	1/6W	
R950	1-247-857-00	CARBON	12K	5%	1/6W	
R951	1-247-823-00	CARBON	470	5%	1/6W	
R952	1-247-863-00	CARBON	22K	5%	1/6W	
R953	1-247-783-00	CARBON	10	5%	1/6W	
R954	1-247-831-00	CARBON	1K	5%	1/6W	
R955	1-247-855-00	CARBON	10K	5%	1/6W	
R956	1-247-131-00	CARBON	1K	5%	1/4W	
R957	1-247-155-00	CARBON	10K	5%	1/4W	
R958 ⚠	1-247-845-31	CARBON	3.9K	5%	1/6W	
⊠ R959 ⚠		METAL			1/6W	
R960 ⚠	1-215-449-31	METAL	15K	1%	1/6W	
R961	1-247-107-00	CARBON	100	5%	1/4W	
R962	1-247-107-00	CARBON	100	5%	1/4W	
R963	1-247-855-00	CARBON	10K	5%	1/6W	
R964	1-247-903-00	CARBON	1M	5%	1/6W	
R965	1-247-885-00	CARBON	180K	5%	1/6W	
R966	1-247-879-00	CARBON	100K	5%	1/6W	
R967	1-247-867-00	CARBON	33K	5%	1/6W	
R968	1-246-485-25	CARBON	3.3K	5%	1/4W	
R969	1-246-485-25	CARBON	3.3K	5%	1/4W	
R970	1-247-853-00	CARBON	8.2K	5%	1/6W	
R971	1-247-137-00	CARBON	1.8K	5%	1/4W	
R972	1-247-024-00	CARBON	2.7	5%	1/8W	F
R973	1-247-024-00	CARBON	2.7	5%	1/8W	F
R974	1-247-024-00	CARBON	2.7	5%	1/8W	F
R976	1-247-859-00	CARBON	15K	5%	1/6W	
R977	1-247-853-00	CARBON	8.2K	5%	1/6W	
R978	1-247-861-00	CARBON	18K	5%	1/6W	
R979	1-247-815-00	CARBON	220	5%	1/6W	
R980	1-247-863-00	CARBON	22K	5%	1/6W	
R981	1-247-823-00	CARBON	470	5%	1/6W	
R982 ⚠	1-215-449-31	METAL	15K	1%	1/6W	
R983	1-246-499-00	CARBON	12K	5%	1/4W	
R984	1-247-857-00	CARBON	12K	5%	1/6W	
R985	1-247-857-00	CARBON	12K	5%	1/6W	
R986	1-246-513-25	CARBON	47K	5%	1/4W	
R987	1-247-837-00	CARBON	1.8K	5%	1/6W	
R988	1-247-841-00	CARBON	2.7K	5%	1/6W	
R989	1-247-839-00	CARBON	2.2K	5%	1/6W	
R990	1-247-833-00	CARBON	1.2K		1/6W	
R991	1-247-809-00	CARBON	120		1/6W	

VARIABLE RESISTOR

RV801	1-228-723-00	RES, ADJ, CERAMIC CARBON 4.7K				
RV802	1-228-719-00	RES, ADJ, CERAMIC CARBON 470				
RV803	1-228-723-00	RES, ADJ, CERAMIC CARBON 4.7K				
RV804	1-228-721-00	RES, ADJ, CERAMIC CARBON 2.2K				
RV805	1-228-723-00	RES, ADJ, CERAMIC CARBON 4.7K				
RV806	1-228-727-00	RES, ADJ, CERAMIC CARBON 47K				
RV807	1-228-723-00	RES, ADJ, CERAMIC CARBON 4.7K				
RV808	1-228-727-00	RES, ADJ, CERAMIC CARBON 47K				
RV809	1-228-727-00	RES, ADJ, CERAMIC CARBON 47K				
RV810	1-228-719-00	RES, ADJ, CERAMIC CARBON 470				
RV811	1-228-719-00	RES, ADJ, CERAMIC CARBON 470				

TRANSFORMER

T801	1-404-581-11	COIL, IF				
T802	1-404-582-11	COIL, IF				
T803	1-404-580-11	COIL, IF				

CRYSTAL

X801	1-567-334-11	OSCILLATOR, CERAMIC (4.88MHZ)				

****

	*A-1190-902-A	P BOARD, COMPLETE				
		**********				
	3-646-071-00	HOLDER, WIRE				
	*4-304-469-00	HOLDER				
	*4-373-007-01	HEAT SINK (P-2)				
	4-373-088-01	SPACER (13X19), MICA				

CAPACITOR

C101	1-102-963-00	CERAMIC	33PF	5%	50V
C102	1-102-816-00	CERAMIC	120PF	5%	50V
C103	1-102-980-00	CERAMIC	270PF	5%	50V
C104	1-123-356-00	ELECT	10MF	20%	16V
C105	1-123-356-00	ELECT	10MF	20%	16V
C106	1-102-980-00	CERAMIC	270PF	5%	50V
C107	1-102-074-00	CERAMIC	0.001MF	10%	50V
C108	1-102-824-00	CERAMIC	470PF	5%	50V
C109	1-123-356-00	ELECT	10MF	20%	16V
C110	1-123-318-00	ELECT	33MF	20%	16V
C111	1-123-343-00	ELECT	33MF	20%	35V
C112	1-123-380-00	ELECT	1MF	20%	50V
C113	1-123-356-00	ELECT	10MF	20%	16V
C114	1-102-978-00	CERAMIC	220PF	5%	50V
C115	1-102-116-00	CERAMIC	680PF	10%	50V
C116	1-102-119-00	CERAMIC	0.0015MF	10%	50V
C117	1-123-356-00	ELECT	10MF	20%	16V
C118	1-101-005-00	CERAMIC	0.022MF		50V
C119	1-123-380-00	ELECT	1MF	20%	50V
C120	1-101-005-00	CERAMIC	0.022MF		50V
C121	1-123-356-00	ELECT	10MF	20%	16V
C123	1-102-121-00	CERAMIC	0.0022MF	10%	50V
C124	1-102-973-00	CERAMIC	100PF	5%	50V
C125	1-102-074-00	CERAMIC	0.001MF	10%	50V
C126	1-101-005-00	CERAMIC	0.022MF		50V
C127	1-102-822-00	CERAMIC	390PF	5%	50V

The components identified by ⊠ in this manual have been carefully factory-selected for each set in order to satisfy regulations regarding X-ray radiation. Should replacement be required, replace only with the value originally used.

NOTE:

The components identified by shading and mark ⚠ are critical for safety. Replace only with part number specified.

PJ ELECTRICAL PARTS LIST

P

Ref.No.	Part No.	Description			Remark
C128	1-102-816-00	CERAMIC	120PF	5%	50V
C129	1-102-074-00	CERAMIC	0.001MF	10%	50V
C130	1-102-822-00	CERAMIC	390PF	5%	50V
C131	1-102-816-00	CERAMIC	120PF	5%	50V
C132	1-123-356-00	ELECT	10MF	20%	16V
C133	1-123-356-00	ELECT	10MF	20%	16V
C134	1-101-005-00	CERAMIC	0.022MF		50V
C135	1-101-005-00	CERAMIC	0.022MF		50V
C136	1-101-005-00	CERAMIC	0.022MF		50V
C137	1-102-973-00	CERAMIC	100PF	5%	50V
C401	1-101-884-00	CERAMIC	56PF	5%	50V
C402	1-101-886-00	CERAMIC	62PF	5%	50V
C403	1-123-380-00	ELECT	1MF	20%	50V
C404	1-123-380-00	ELECT	1MF	20%	50V
C405	1-123-380-00	ELECT	1MF	20%	50V
C406	1-123-356-00	ELECT	10MF	20%	16V
C407	1-123-380-00	ELECT	1MF	20%	50V
C408	1-102-123-00	CERAMIC	0.0033MF	10%	50V
C409	1-102-123-00	CERAMIC	0.0033MF	10%	50V
C410	1-123-356-00	ELECT	10MF	20%	16V
C411	1-108-433-00	MYLAR	0.1MF	10%	200V
C412	1-102-030-00	CERAMIC	330PF	10%	500V
C413	1-161-023-00	CERAMIC	0.068MF	10%	25V
C414	1-102-074-00	CERAMIC	0.001MF	10%	50V
C415	1-106-351-00	MYLAR	0.0022MF	10%	200V
C416	1-129-961-00	FILM	1.2MF	5%	400V
C417	1-129-961-00	FILM	1.2MF	5%	400V
C418	1-108-824-00	MYLAR	0.47MF	5%	50V
C419	1-123-382-00	ELECT	3.3MF	20%	100V
C420	1-123-356-00	ELECT	10MF	20%	50V
C421	1-130-495-00	MYLAR	0.1MF	5%	50V
C422	1-136-108-00	FILM	0.43MF	5%	200V
C425	1-125-195-00	ELECT	4.7MF		100V
C426	1-130-493-00	MYLAR	0.068MF	5%	50V
C451	1-130-471-00	MYLAR	0.001MF	5%	50V
C452	1-130-471-00	MYLAR	0.001MF	5%	50V
C453	1-102-824-00	CERAMIC	470PF	5%	50V
C454	1-102-973-00	CERAMIC	100PF	5%	50V
C455	1-108-603-00	MYLAR	0.1MF	5%	50V
C456	1-108-595-00	MYLAR	0.047MF	5%	50V
C457	1-130-487-00	MYLAR	0.022MF	5%	50V
C458	1-130-487-00	MYLAR	0.022MF	5%	50V
C459	1-123-308-00	ELECT	220MF		10V
C460	1-101-005-00	CERAMIC	0.022MF		50V

DIODE

D401	8-719-999-62	DIODE EQA01-06S2
D402	8-719-928-08	DIODE ERD28-08
D403	8-719-901-93	DIODE V19E
D451	8-719-911-19	DIODE 1SS119

IC

IC101	8-759-201-40	IC TL8605P-S
IC102	8-759-990-82	IC TL082CP
IC103	8-759-990-82	IC TL082CP
IC401	8-759-990-82	IC TL082CP
IC402	8-759-990-82	IC TL082CP
IC403	8-759-990-82	IC TL082CP
IC404	8-759-157-41	IC UPC574J-G
IC451	8-759-901-23	IC SN74LS123N
IC452	8-759-901-23	IC SN74LS123N
IC453	8-759-901-23	IC SN74LS123N
IC454	8-759-901-23	IC SN74LS123N
IC455	8-759-902-79	IC SN74LS279N
IC456	8-759-900-00	IC SN74LS00N

COIL

L101	1-408-422-00	MICRO INDUCTOR 120UH
L102	1-408-425-00	MICRO INDUCTOR 220UH
L103	1-408-426-00	MICRO INDUCTOR 270UH
L104	1-408-429-00	MICRO INDUCTOR 470UH
L105	1-408-429-00	MICRO INDUCTOR 470UH
L106	1-408-426-00	MICRO INDUCTOR 270UH
L107	1-408-429-00	MICRO INDUCTOR 470UH
L108	1-408-426-00	MICRO INDUCTOR 270UH
L401	1-459-263-00	COIL, MODULATION
L402	1-407-365-00	COIL, CHOKE

CONNECTOR

P1	*1-564-441-11	PLUG, CONNECTOR (2.5MM) 5P
P2	*1-564-354-21	PLUG, CONNECTOR (2.5MM) 3P
P3	*1-564-353-00	PLUG, CONNECTOR (2.5MM) 2P
P4	*1-508-766-00	4P PLUG (M)
P5	*1-564-353-00	PLUG, CONNECTOR (2.5MM) 2P
P6	*1-564-353-00	PLUG, CONNECTOR (2.5MM) 2P
P7	*1-564-440-11	PLUG, CONNECTOR (2.5MM) 4P
P8	*1-564-353-00	PLUG, CONNECTOR (2.5MM) 2P
P9	*1-564-354-00	PLUG, CONNECTOR (2.5MM) 3P
P10	*1-564-353-00	PLUG, CONNECTOR (2.5MM) 2P
P11	*1-508-786-00	2P PLUG (M)
P12	*1-564-353-00	PLUG, CONNECTOR (2.5MM) 2P

TRANSISTOR

Q101	8-729-245-83	TRANSISTOR 2SC2458
Q102	8-729-245-83	TRANSISTOR 2SC2458
Q103	8-729-245-83	TRANSISTOR 2SC2458
Q104	8-729-245-83	TRANSISTOR 2SC2458
Q105	8-729-245-83	TRANSISTOR 2SC2458
Q106	8-729-245-83	TRANSISTOR 2SC2458
Q107	8-729-245-83	TRANSISTOR 2SC2458
Q108	8-729-188-23	TRANSISTOR 2SD882
Q109	8-729-177-23	TRANSISTOR 2SB772
Q401	8-729-168-82	TRANSISTOR 2SC2688
Q402	8-726-420-00	THYRISTOR SG264A

Ref.No.	Part No.	Description				Remark
		RESISTOR				
R101	1-247-833-00	CARBON	1.2K	5%	1/6W	
R102	1-247-841-00	CARBON	2.7K	5%	1/6W	
R103	1-247-851-00	CARBON	6.8K	5%	1/6W	
R104	1-247-835-00	CARBON	1.5K	5%	1/6W	
R105	1-247-865-00	CARBON	27K	5%	1/6W	
R106	1-247-847-00	CARBON	4.7K	5%	1/6W	
R107	1-247-863-00	CARBON	22K	5%	1/6W	
R108	1-247-863-00	CARBON	22K	5%	1/6W	
R109	1-247-863-00	CARBON	22K	5%	1/6W	
R110	1-247-867-00	CARBON	33K	5%	1/6W	
R111	1-247-855-00	CARBON	10K	5%	1/6W	
R112	1-247-869-00	CARBON	39K	5%	1/6W	
R113	1-247-869-00	CARBON	39K	5%	1/6W	
R114	1-247-847-00	CARBON	4.7K	5%	1/6W	
R115	1-247-179-00	CARBON	100K	5%	1/4W	
R116	1-247-023-00	CARBON	2.2	5%	1/8W	F
R117	1-247-831-00	CARBON	1K	5%	1/6W	
R118	1-247-821-00	CARBON	390	5%	1/6W	
R119	1-247-837-00	CARBON	1.8K	5%	1/6W	
R120	1-247-831-00	CARBON	1K	5%	1/6W	
R122	1-247-845-00	CARBON	3.9K	5%	1/6W	
R123	1-247-855-00	CARBON	10K	5%	1/6W	
R124	1-247-879-00	CARBON	100K	5%	1/6W	
R125	1-247-871-00	CARBON	47K	5%	1/6W	
R126	1-247-837-00	CARBON	1.8K	5%	1/6W	
R127	1-247-831-00	CARBON	1K	5%	1/6W	
R128	1-247-847-00	CARBON	4.7K	5%	1/6W	
R129	1-247-837-00	CARBON	1.8K	5%	1/6W	
R130	1-247-831-00	CARBON	1K	5%	1/6W	
R131	1-247-831-00	CARBON	1K	5%	1/6W	
R132	1-247-859-00	CARBON	15K	5%	1/6W	
R133	1-247-841-00	CARBON	2.7K	5%	1/6W	
R134	1-247-859-00	CARBON	15K	5%	1/6W	
R135	1-247-831-00	CARBON	1K	5%	1/6W	
R137	1-247-024-00	CARBON	2.7	5%	1/8W	F
R138	1-247-833-00	CARBON	1.2K		1/6W	
R401	1-247-849-00	CARBON	5.6K	5%	1/6W	
R402	1-247-867-00	CARBON	33K	5%	1/6W	
R403	1-247-849-00	CARBON	5.6K	5%	1/6W	
R404	1-247-865-00	CARBON	27K	5%	1/6W	
R405	1-247-863-00	CARBON	22K	5%	1/6W	
R406	1-247-841-00	CARBON	2.7K	5%	1/6W	
R407	1-247-869-00	CARBON	39K	5%	1/6W	
R408	1-247-833-00	CARBON	1.2K	5%	1/6W	
R409	1-247-869-00	CARBON	39K	5%	1/6W	
R410	1-247-823-00	CARBON	470	5%	1/6W	
R411	1-247-847-00	CARBON	4.7K	5%	1/6W	
R412	1-247-863-00	CARBON	22K	5%	1/6W	
R413	1-247-831-00	CARBON	1K	5%	1/6W	
R414	1-247-783-00	CARBON	10	5%	1/6W	
R415	1-247-837-00	CARBON	1.8K	5%	1/6W	
R416	1-247-857-00	CARBON	12K	5%	1/6W	
R417	1-247-831-00	CARBON	1K	5%	1/6W	
R418	1-247-024-00	CARBON	2.7	5%	1/8W	F
R419	1-247-823-00	CARBON	470	5%	1/6W	
R420	1-247-855-00	CARBON	10K	5%	1/6W	
R421	1-206-737-51	METAL OXIDE	3.3K	5%	3W	F
R422	1-213-143-00	METAL OXIDE	1K	5%	1W	F
R423	1-206-463-00	METAL OXIDE	10	5%	2W	F
R424	1-213-159-00	METAL OXIDE	22K	5%	1W	F
R425	1-215-455-00	METAL	27K	1%	1/6W	
R426	1-215-439-00	METAL	5.6K	1%	1/6W	
⊠R427 ⚠		CARBON			1/6W	
⊠R428 ⚠		CARBON			1/6W	
R429	1-247-855-00	CARBON	10K	5%	1/6W	
R430	1-247-811-00	CARBON	150	5%	1/6W	
R431	1-214-603-00	METAL OXIDE	47K	5%	2W	F
R432	1-247-883-00	CARBON	150K	5%	1/6W	
R433 ⚠	1-214-769-51	METAL	47K	1%	1/4W	
R434 ⚠	1-215-461-31	METAL	47K	1%	1/6W	
R435 ⚠	1-215-461-31	METAL	47K	1%	1/6W	
R436	1-246-491-25	CARBON	5.6K	5%	1/4W	
R437 ⚠	1-246-527-25	CARBON	180K	5%	1/4W	
R438	1-247-107-00	CARBON	100	5%	1/4W	
R439	1-247-883-00	CARBON	150K	5%	1/6W	
R451	1-247-807-00	CARBON	100	5%	1/6W	
R452	1-247-874-00	CARBON	62K	5%	1/6W	
R453	1-247-857-00	CARBON	12K	5%	1/6W	
R454	1-247-855-00	CARBON	10K	5%	1/6W	
R455	1-247-859-00	CARBON	15K	5%	1/6W	
R456	1-247-855-00	CARBON	10K	5%	1/6W	
R457	1-247-107-00	CARBON	100	5%	1/4W	
R458	1-247-837-00	CARBON	1.8K	5%	1/6W	
R459	1-247-886-00	CARBON	200K	5%	1/6W	
R460	1-247-878-00	CARBON	91K	5%	1/6W	
R461	1-247-874-00	CARBON	62K	5%	1/6W	
R462	1-247-869-00	CARBON	39K	5%	1/6W	
R463	1-247-107-00	CARBON	100	5%	1/4W	
R464	1-247-807-00	CARBON	100	5%	1/6W	
R465	1-247-107-00	CARBON	100	5%	1/4W	
		VARIABLE RESISTOR				
RV101	1-228-720-00	RES, ADJ, CERAMIC CARBON 1K				
RV102	1-228-725-00	RES, ADJ, CERAMIC CARBON 22K				
		TRANSFORMER				
T401	1-437-090-00	HDT				
		CRYSTAL				
X101	1-567-335-11	OSCILLATOR, CERAMIC				

The components identified by ⊠ in this manual have been carefully factory-selected for each set in order to satisfy regulations regarding X-ray radiation. Should replacement be required, replace only with the value originally used.

NOTE:

The components identified by shading and mark ⚠ are critical for safety. Replace only with part number specified.

PJ ELECTRICAL PARTS LIST

GA | GB | A

Ref.No.	Part No.	Description				Remark
	*1-613-082-11	GA BOARD ********				
	1-533-087-00	HOLDER, FUSE				
	*4-363-404-00	HOLDER, IC				
	4-363-414-00	SPACER, MICA				
		CAPACITOR				
C651	⚠ 1-108-633-11	MYLAR	0.039MF	10%	100V	
C652	⚠ 1-136-103-11	FILM	0.1MF	5%	200V	
C653	⚠ 1-136-282-11	FILM	0.0027MF	3%	2KV	
C663	⚠ 1-123-338-51	ELECT	2200MF	20%	25V	
C664	⚠ 1-108-688-11	MYLAR	0.0047MF	10%	200V	
C665	⚠ 1-102-050-51	CERAMIC	0.01MF		500V	
		DIODE				
D651	⚠ 8-719-300-91	DIODE EM-1ZS				
D657	⚠ 8-719-302-00	DIODE RU-2M				
D658	⚠ 8-719-302-00	DIODE RU-2M				
		FUSE				
F651	⚠ 1-532-579-11	FUSE, GLASS TUBE 125V/4.0A				
		CONNECTOR				
GA1	*1-508-765-00	3P PLUG (M)				
		COIL				
L651	⚠ 1-425-612-11	COIL, ARE-CORE				
L652	⚠ 1-425-612-11	COIL, ARE-CORE				
L653	⚠ 1-425-612-11	COIL, ARE-CORE				
L658	⚠ 1-407-365-13	COIL, CHOKE				
		TRANSISTOR				
Q651	⚠ 8-729-301-39	TRANSISTOR 2SC3387-01B				
		RESISTOR				
R651	⚠ 1-214-603-61	METAL OXIDE	47K	5%	2W	F
R652	⚠ 1-206-443-61	METAL OXIDE	1.5	5%	2W	F
R662	⚠ 1-206-451-61	METAL OXIDE	3.3	5%	2W	F
		TRANSFORMER				
T651	⚠ 1-421-681-11	CDT				
T653	⚠ 1-421-689-11	PIT				
	*1-613-083-11	GB BOARD ********				
		CAPACITOR				
C654	⚠ 1-108-680-11	MYLAR	0.001MF	10%	200V	
C655	⚠ 1-123-356-51	ELECT	10MF	20%	50V	
C656	⚠ 1-129-710-51	FILM	0.0047MF	10%	630V	
C657	⚠ 1-136-240-11	FILM	0.014MF	3%	1KV	
C658	⚠ 1-102-038-51	CERAMIC	0.001MF		500V	
C659	⚠ 1-102-038-51	CERAMIC	0.001MF		500V	
C660	⚠ 1-124-129-51	ELECT	2200MF	20%	25V	
C661	⚠ 1-123-324-51	ELECT	1000MF	20%	16V	
C662	⚠ 1-125-294-11	ELECT(BLOCK)	560MF	20%	160V	
C666	⚠ 1-108-680-11	MYLAR	0.001MF	10%	200V	
		DIODE				
D653	⚠ 8-719-302-00	DIODE RU-2M				
D654	⚠ 8-719-302-00	DIODE RU-2M				
D655	⚠ 8-719-903-06	DIODE ERC84-009				
D656	⚠ 8-719-981-01	DIODE ERA81-004				
D659	⚠ 8-719-300-74	DIODE RH-1				
		CONNECTOR				
GB1	*1-508-765-00	3P PLUG (M)				
		IC				
IC651	⚠ 1-235-388-11	MODULE, POWER (DM-17)				
		COIL				
L654	⚠ 1-459-155-11	COIL (WITH CORE) 45MH				
L655	⚠ 1-459-155-11	COIL (WITH CORE) 45MH				
L656	⚠ 1-407-365-13	COIL, CHOKE				
L657	⚠ 1-407-365-13	COIL, CHOKE				
		RESISTOR				
R654	⚠ 1-206-696-61	METAL OXIDE	22K	5%	2W	F
R655	⚠ 1-211-477-11	CARBON	12K	5%	1/8W	F
R656	⚠ 1-247-033-11	CARBON	100	5%	1/8W	F
R657	⚠ 1-247-033-11	CARBON	100	5%	1/8W	F
R658	⚠ 1-202-723-51	SOLID	2.2M	10%	1/2W	
R659	⚠ 1-217-418-21	FUSIBLE	0.47	10%	1/2W	F
R660	⚠ 1-217-418-21	FUSIBLE	0.47	10%	1/2W	F
		TRANSFORMER				
T652	⚠ 1-421-688-11	PRT				
	*A-1295-899-A	A BOARD, COMPLETE **********				
	*1-613-058-11	A BOARD				
	*1-555-400-00	CABLE, PIN				
	*4-370-613-01	CASE(A)(UPPER LID), SHIELD, VIF				
	*4-370-614-01	CASE (A) (MAIN), SHIELD, VIF				
	*4-370-615-01	CASE(A)(BOTTOM LID), SHIELD, VIF				
		CONNECTOR				
A1	*1-564-445-11	PLUG, CONNECTOR (2.5MM) 9P				
A2	*1-564-443-11	PLUG, CONNECTOR (2.5MM) 7P				
A3	*1-564-440-11	PLUG, CONNECTOR (2.5MM) 4P				

NOTE:

The components identified by shading and mark ⚠ are critical for safety. Replace only with part number specified.

Ref.No.	Part No.	Description			Remark
A4	*1-564-440-11	PLUG, CONNECTOR (2.5MM) 4P			
A5	*1-564-440-11	PLUG, CONNECTOR (2.5MM) 4P			
A6	*1-564-441-11	PLUG, CONNECTOR (2.5MM) 5P			
A7	*1-564-353-00	PLUG, CONNECTOR (2.5MM) 2P			
		CAPACITOR			
C201	1-123-586-00	ELECT	0.1MF	20%	50V
C202	1-123-586-00	ELECT	0.1MF	20%	50V
C203	1-102-634-11	CERAMIC	8PF	0.5PF	50V
C204	1-102-637-00	CERAMIC	12PF	5%	50V
C205	1-102-121-00	CERAMIC	0.0022MF	10%	50V
C206	1-123-330-00	ELECT	22MF	20%	16V
C207	1-102-121-00	CERAMIC	0.0022MF	10%	50V
C208	1-123-286-00	ELECT	0.33MF	20%	50V
C209	1-102-121-00	CERAMIC	0.0022MF	10%	50V
C210	1-101-004-00	CERAMIC	0.01MF		50V
C211	1-102-121-00	CERAMIC	0.0022MF	10%	50V
C212	1-102-121-00	CERAMIC	0.0022MF	10%	50V
C213	1-161-013-00	CERAMIC	0.01MF	10%	25V
C214	1-123-380-00	ELECT	1MF	20%	50V
C215	1-102-525-00	CERAMIC	68PF	5%	50V
C216	1-102-851-00	CERAMIC	15PF	5%	50V
C217	1-102-525-00	CERAMIC	68PF	5%	50V
C218	1-123-356-00	ELECT	10MF	20%	16V
C220	1-123-356-00	ELECT	10MF	20%	16V
C221	1-101-005-00	CERAMIC	0.022MF		50V
C222	1-123-309-00	ELECT	330MF	20%	10V
C223	1-161-059-00	CERAMIC	0.047MF	10%	25V
C224	1-161-059-00	CERAMIC	0.047MF	10%	25V
C225	1-102-824-00	CERAMIC	470PF	5%	50V
C227	1-123-332-00	ELECT	47MF	20%	16V
C228	1-123-332-00	ELECT	47MF	20%	16V
C229	1-123-332-00	ELECT	47MF	20%	16V
C231	1-123-332-00	ELECT	47MF	20%	16V
C232	1-123-318-00	ELECT	33MF	20%	16V
C234	1-123-356-00	ELECT	10MF	20%	16V
C235	1-123-356-00	ELECT	10MF	20%	16V
C236	1-123-330-00	ELECT	22MF	20%	16V
C237	1-101-004-00	CERAMIC	0.01MF		50V
C238	1-123-318-00	ELECT	33MF	20%	16V
C239	1-101-004-00	CERAMIC	0.01MF		50V
C240	1-102-973-00	CERAMIC	100PF	5%	50V
C263	1-123-356-00	ELECT	10MF	20%	16V
C1101	1-101-004-00	CERAMIC	0.01MF		50V
C1102	1-102-976-00	CERAMIC	180PF	5%	50V
C1103	1-102-978-00	CERAMIC	220PF	5%	50V
C1104	1-102-976-00	CERAMIC	180PF	5%	50V
C1105	1-102-978-00	CERAMIC	220PF	5%	50V
C1106	1-102-978-00	CERAMIC	220PF	5%	50V
C1107	1-102-074-00	CERAMIC	0.001MF	10%	50V
C1108	1-123-381-00	ELECT	2.2MF	20%	50V
C1109	1-101-880-00	CERAMIC	47PF	5%	50V
C1110	1-101-884-00	CERAMIC	56PF	5%	50V
C1111	1-123-307-00	ELECT	100MF	20%	10V
C1112	1-101-006-00	CERAMIC	0.047MF		50V
C1113	1-102-125-00	CERAMIC	0.0047MF	10%	50V
C1114	1-102-978-00	CERAMIC	220PF	5%	50V
C1115	1-101-006-00	CERAMIC	0.047MF		50V
C1116	1-123-379-00	ELECT	0.47MF	20%	50V
C1117	1-123-359-00	ELECT	47MF	20%	50V
C1118	1-102-074-00	CERAMIC	0.001MF	10%	50V
C1119	1-102-976-00	CERAMIC	180PF	5%	50V
C1120	1-102-976-00	CERAMIC	180PF	5%	50V
C1121	1-101-880-00	CERAMIC	47PF	5%	50V
C1122	1-101-004-00	CERAMIC	0.01MF		50V
C1123	1-123-369-00	ELECT	4.7MF	20%	50V
C1124	1-102-125-00	CERAMIC	0.0047MF	10%	50V
C1125	1-101-880-00	CERAMIC	47PF	5%	50V
C1126	1-101-006-00	CERAMIC	0.047MF		50V
C1127	1-101-004-00	CERAMIC	0.01MF		50V
C1130	1-123-318-00	ELECT	33MF	20%	10V
C1131	1-102-074-00	CERAMIC	0.001MF	10%	50V
C1132	1-102-114-00		470PF		50V
C1133	1-102-074-00		0.001MF		50V
		FILTER			
CF201	1-527-943-00	FILTER, CERAMIC			
CF202	1-409-332-00	CERAMIC TRAP (4.5MHZ)			
		DIODE			
D203	8-719-102-70	DIODE RD5.6E-N1			
D204	8-719-102-91	DIODE RD10E-N3			
D207	8-719-911-19	DIODE 1SS119			
D208	8-719-911-19	DIODE 1SS119			
D209	8-719-101-04	DIODE RD33E-B2			
D210	8-719-911-19	DIODE 1SS119			
D1101	8-719-102-60	DIODE RD3.9E-N2			
D1102	8-719-911-19	DIODE 1SS119			
D1104	8-719-911-19	DIODE 1SS119			
D1105	8-719-100-35	DIODE RD5.6E-B2			
D1106	8-719-911-19	DIODE 1SS119			
		IC			
IC201	8-752-001-41	IC CX20014A			
IC202	8-759-800-65	IC LA7910			
IC1101	8-759-910-21	IC CX520-108N			
IC1102	8-759-909-50	IC CX7958			
IC1103	8-759-102-12	IC UPD6250C			
		COIL			
L201	1-408-562-00	MICRO INDUCTOR 8.2UH			
L202	1-408-596-00	MICRO INDUCTOR 2.7UH			
L203	1-408-412-00	MICRO INDUCTOR 18UH			
L204	1-410-007-11	MICRO INDUCTOR 0.68UH			
L205	1-410-001-11	MICRO INDUCTOR 0.22UH			
L206	1-410-007-11	MICRO INDUCTOR 0.68UH			
L1102	1-408-591-00	MICRO INDUCTOR 1UH			
L1103	1-407-717-00	MICRO INDUCTOR 1MMH			
L1105	1-410-033-21	MICRO INDUCTOR 100UH			
L1107	1-410-014-11	MICRO INDUCTOR 2.7UH			
L1108	1-410-011-21	MICRO INDUCTOR 1.5UH			

A

Ref.No.	Part No.	Description				Remark
		TRANSISTOR				
Q201	8-729-245-83	TRANSISTOR 2SC2458				
Q203	8-729-288-02	TRANSISTOR 2SD880				
Q204	8-729-883-91	TRANSISTOR 2SC2839-D				
Q205	8-729-245-83	TRANSISTOR 2SC2458				
Q206	8-729-245-83	TRANSISTOR 2SC2458				
Q207	8-729-204-83	TRANSISTOR 2SA1048GR				
Q211	8-729-245-83	TRANSISTOR 2SC2458				
Q212	8-729-245-83	TRANSISTOR 2SC2458				
Q1102	8-729-204-83	TRANSISTOR 2SA1048GR				
Q1103	8-729-245-83	TRANSISTOR 2SC2458				
Q1104	8-729-245-83	TRANSISTOR 2SC2458				
Q1105	8-729-245-83	TRANSISTOR 2SC2458				
Q1106	8-729-117-51	TRANSISTOR 2SA1175				
Q1107	8-729-245-83	TRANSISTOR 2SC2458				
		RESISTOR				
R201	1-247-831-00	CARBON	1K	5%	1/6W	
R202	1-247-837-00	CARBON	1.8K	5%	1/6W	
R203	1-247-831-00	CARBON	1K	5%	1/6W	
R204	1-247-843-00	CARBON	3.3K	5%	1/6W	
R205	1-247-883-00	CARBON	150K	5%	1/6W	
R206	1-247-883-00	CARBON	150K	5%	1/6W	
R207	1-247-803-00	CARBON	68	5%	1/6W	
R208	1-247-833-00	CARBON	1.2K	5%	1/6W	
R209	1-247-837-00	CARBON	1.8K	5%	1/6W	
R210	1-246-481-00	CARBON	2.2K	5%	1/4W	
R211	1-247-805-00	CARBON	82	5%	1/6W	
R212	1-246-501-25	CARBON	15K	5%	1/4W	
R213	1-247-817-00	CARBON	270	5%	1/6W	
R214	1-247-801-00	CARBON	56	5%	1/6W	
R215	1-215-457-00	METAL	33K	1%	1/6W	
R216	1-247-883-00	CARBON	150K	5%	1/6W	
R217	1-214-765-00	METAL	33K	1%	1/4W	
R218	1-246-491-25	CARBON	5.6K	5%	1/4W	
R219	1-247-833-00	CARBON	1.2K	5%	1/6W	
R220	1-247-847-00	CARBON	4.7K	5%	1/6W	
R221	1-247-803-00	CARBON	68	5%	1/6W	
R222	1-247-819-00	CARBON	330	5%	1/6W	
R223	1-247-831-00	CARBON	1K	5%	1/6W	
R224	1-247-843-00	CARBON	3.3K	5%	1/6W	
R225	1-247-829-00	CARBON	820	5%	1/6W	
R226	1-247-844-00	CARBON	3.6K	5%	1/6W	
R227	1-247-831-00	CARBON	1K	5%	1/6W	
R228	1-213-125-00	METAL OXIDE	33	5%	1W	F
R229	1-212-372-00	METAL OXIDE	10	5%	1W	F
R230	1-247-131-00	CARBON	1K	5%	1/4W	
R231	1-247-807-00	CARBON	100	5%	1/6W	
R236	1-247-879-00	CARBON	100K	5%	1/6W	
R240	1-247-771-00	CARBON	3.3	5%	1/8W	F
R241	1-247-819-00	CARBON	330	5%	1/6W	
R243	1-247-119-00	CARBON	330	5%	1/4W	
R244	1-247-807-00	CARBON	100	5%	1/6W	
R249	1-246-457-00	CARBON	220	5%	1/4W	
R252	1-247-883-00	CARBON	150K	5%	1/6W	
R253	1-247-831-00	CARBON	1K	5%	1/6W	
R255	1-247-807-00	CARBON	100	5%	1/6W	
R256	1-247-831-00	CARBON	1K	5%	1/6W	
R257	1-247-871-00	CARBON	47K	5%	1/6W	
R258	1-246-525-00	CARBON	150K	5%	1/4W	
R260	1-247-855-00	CARBON	10K	5%	1/6W	
R261	1-247-855-00	CARBON	10K	5%	1/6W	
R262	1-247-831-00	CARBON	1K	5%	1/6W	
R1101	1-213-143-00	METAL OXIDE	1K	5%	1W	F
R1102	1-247-125-00	CARBON	560	5%	1/4W	
R1103	1-246-481-00	CARBON	2.2K	5%	1/4W	
R1104	1-247-125-00	CARBON	560	5%	1/4W	
R1105	1-247-125-00	CARBON	560	5%	1/4W	
R1106	1-247-125-00	CARBON	560	5%	1/4W	
R1107	1-246-481-00	CARBON	2.2K	5%	1/4W	
R1108	1-246-509-25	CARBON	33K	5%	1/4W	
R1109	1-246-481-00	CARBON	2.2K	5%	1/4W	
R1110	1-246-481-00	CARBON	2.2K	5%	1/4W	
R1111	1-246-513-25	CARBON	47K	5%	1/4W	
R1112	1-246-491-25	CARBON	5.6K	5%	1/4W	
R1113	1-247-155-00	CARBON	10K	5%	1/4W	
R1114	1-247-857-00	CARBON	12K	5%	1/6W	
R1115	1-247-839-00	CARBON	2.2K	5%	1/6W	
R1116	1-247-863-00	CARBON	22K	5%	1/6W	
R1117	1-247-131-00	CARBON	1K	5%	1/4W	
R1118	1-246-517-00	CARBON	68K	5%	1/4W	
R1119	1-247-839-00	CARBON	2.2K	5%	1/6W	
R1120	1-247-839-00	CARBON	2.2K	5%	1/6W	
R1121	1-247-839-00	CARBON	2.2K	5%	1/6W	
R1122	1-247-871-00	CARBON	47K	5%	1/6W	
R1123	1-246-481-00	CARBON	2.2K	5%	1/4W	
R1124	1-247-839-00	CARBON	2.2K	5%	1/6W	
R1125	1-247-839-00	CARBON	2.2K	5%	1/6W	
R1126	1-247-839-00	CARBON	2.2K	5%	1/6W	
R1127	1-247-839-00	CARBON	2.2K	5%	1/6W	
R1128	1-247-839-00	CARBON	2.2K	5%	1/6W	
R1130	1-247-831-00	CARBON	1K	5%	1/6W	
R1131	1-246-499-00	CARBON	12K	5%	1/4W	
R1132	1-246-507-00	CARBON	27K	5%	1/4W	
R1133	1-247-855-00	CARBON	10K	5%	1/6W	
R1134	1-247-855-00	CARBON	10K	5%	1/6W	
R1135	1-247-885-00	CARBON	180K	5%	1/6W	
R1136	1-247-823-00	CARBON	470	5%	1/6W	
R1137	1-247-855-00	CARBON	10K	5%	1/6W	
R1138	1-247-859-00	CARBON	15K	5%	1/6W	
R1139	1-246-501-25	CARBON	15K	5%	1/4W	
R1140	1-246-489-25	CARBON	4.7K	5%	1/4W	
R1141	1-247-883-00	CARBON	150K	5%	1/6W	
R1142	1-247-829-00	CARBON	820	5%	1/6W	
R1143	1-246-481-00	CARBON	2.2K	5%	1/4W	

Ref.No.	Part No.	Description				Remark
R1144	1-246-481-00	CARBON	2.2K	5%	1/4W	
R1145	1-246-481-00	CARBON	2.2K	5%	1/4W	
R1146	1-247-863-00	CARBON	22K	5%	1/6W	
R1147	1-247-155-00	CARBON	10K	5%	1/4W	
R1150	1-247-879-00	CARBON	100K	5%	1/6W	
R1153	1-247-831-00	CARBON	1K	5%	1/6W	
R1154	1-247-807-00	CARBON	100	5%	1/6W	
R1155	1-247-821-00	CARBON	390	5%	1/6W	
R1156	1-247-831-00	CARBON	1K	5%	1/6W	
R1157	1-247-831-00	CARBON	1K	5%	1/6W	
R1158	1-247-847-00	CARBON	4.7K	5%	1/6W	
R1159	1-246-489-25	CARBON	4.7K	5%	1/4W	
R1160	1-247-855-00	CARBON	10K	5%	1/6W	
R1161	1-247-879-00	CARBON	100K	5%	1/6W	
R1162	1-246-505-00	CARBON	22K	5%	1/4W	
R1163	1-247-815-00	CARBON	390		1/6W	
R1164	1-246-513-00	CARBON	47K		1/4W	
		VARIABLE RESISTOR				
RV201	1-228-724-00	RES, ADJ, CERAMIC CARBON 10K				
RV202	1-228-724-00	RES, ADJ, CERAMIC CARBON 10K				
		FILTER				
SWF201	1-404-227-71	SAWF 45MHZ				
		TRANSFORMER				
T201	1-404-541-11	COIL				
T202	1-404-467-00	COIL, VIF				
T203	1-404-467-00	COIL, VIF				
T204	1-404-505-00	COIL				
T1101	1-404-538-11	COIL				
		THERMISTOR				
TH201	1-800-627-00	THERMISTOR				
		TUNER				
TU201⚠	1-463-470-00	TUNER, ET (BT-896)				
TU202⚠	1-463-471-31	SYNTHESIZER UNIT, FREQUENCY				
		CRYSTAL				
X1101	1-567-254-11	OSCILLATOR, CERAMIC				
X1101	1-567-254-11	OSCILLATOR, CERAMIC				
**********						
	*1-613-376-11	MB BOARD ********				
	4-359-103-00	HOLDER, LED				
		DIODE				
D005	8-719-812-43	DIODE TLG124A				

Ref.No.	Part No.	Description				Remark
	*1-613-913-11	MC BOARD ********				
		CAPACITOR				
C031	1-123-369-00	ELECT	4.7MF	20%	50V	
C032	1-123-369-00	ELECT	4.7MF	20%	50V	
C033	1-123-318-00	ELECT	33MF	20%	16V	
C036	1-102-074-00	CERAMIC	0.001MF	10%	50V	
C037	1-102-074-00	CERAMIC	0.001MF	10%	50V	
		IC				
IC031	8-759-901-23	IC SN74LS123N				
		CONNECTOR				
MC1	*1-564-442-11	PLUG, CONNECTOR (2.5MM) 6P				
MC2	*1-560-456-00	PIN, CONNECTOR 2P				
		TRANSISTOR				
Q031	8-729-245-83	TRANSISTOR 2SC2458				
Q032	8-729-245-83	TRANSISTOR 2SC2458				
		RESISTOR				
R031	1-247-875-00	CARBON	68K	5%	1/6W	
R032	1-247-875-00	CARBON	68K	5%	1/6W	
R033	1-247-861-00	CARBON	18K	5%	1/6W	
R034	1-247-855-00	CARBON	10K	5%	1/6W	
R035	1-247-831-00	CARBON	1K	5%	1/6W	
R036	1-247-831-00	CARBON	1K	5%	1/6W	
R037	1-247-869-00	CARBON	39K	5%	1/6W	
R038	1-247-877-00	CARBON	82K	5%	1/6W	
R039	1-247-847-00	CARBON	4.7K	5%	1/6W	
**********						
	*A-1306-309-A	MA BOARD, COMPLETE **********				
		CAPACITOR				
C001	1-123-645-00	ELECT	33MF	20%	10V	
C002	1-161-323-00	CERAMIC	0.001MF	10%	50V	
C003	1-161-315-00	CERAMIC	220PF	10%	50V	
C004	1-161-315-00	CERAMIC	220PF	10%	50V	
C005	1-108-579-00	MYLAR	0.01MF	5%	50V	
		DIODE				
D001	8-719-102-58	DIODE RD3.6E-N2				
D002	8-719-911-19	DIODE 1SS119				
		IC				
IC001	8-759-910-39	IC CX23041-01				
		CONNECTOR				
M1	*1-564-452-11	PLUG, CONNECTOR (2.5MM) 4P				
M2	*1-564-450-11	PLUG, CONNECTOR (2.5MM) 2P				

NOTE:

The components identified by shading and mark ⚠ are critical for safety. Replace only with part number specified.

MA C

Ref.No.	Part No.	Description	Remark
M3	*1-564-451-11	PLUG, CONNECTOR (2.5MM) 3P	
M4	*1-564-453-41	PLUG, CONNECTOR (2.5MM) 5P	
M5	*1-564-452-21	PLUG, CONNECTOR (2.5MM) 4P	
		TRANSISTOR	
Q001	8-729-245-83	TRANSISTOR 2SC2458	
		RESISTOR	
R001	1-247-819-00	CARBON 330 5% 1/6W	
R002	1-247-807-00	CARBON 100 5% 1/6W	
R003	1-247-847-00	CARBON 4.7K 5% 1/6W	
R004	1-247-833-00	CARBON 1.2K 5% 1/6W	
R006	1-246-481-00	CARBON 2.2K 5% 1/4W	
R007	1-247-839-00	CARBON 2.2K 5% 1/6W	
R008	1-247-839-00	CARBON 2.2K 5% 1/6W	
R009	1-247-839-00	CARBON 2.2K 5% 1/6W	
R010	1-247-839-00	CARBON 2.2K 5% 1/6W	
R012	1-247-839-00	CARBON 2.2K 5% 1/6W	
R013	1-247-839-00	CARBON 2.2K 5% 1/6W	
R014	1-247-839-00	CARBON 2.2K 5% 1/6W	
R015	1-247-839-00	CARBON 2.2K 5% 1/6W	
R016	1-247-839-00	CARBON 2.2K 5% 1/6W	
R018	1-247-823-00	CARBON 470 5% 1/6W	
R107	1-247-839-00	CARBON 2.2K 5% 1/6W	
		SWITCH	
S001	1-554-303-00	SWITCH, KEY BOARD	
S002	1-554-303-00	SWITCH, KEY BOARD	
S003	1-554-303-00	SWITCH, KEY BOARD	
S004	1-554-303-00	SWITCH, KEY BOARD	
S005	1-554-303-00	SWITCH, KEY BOARD	
S006	1-554-303-00	SWITCH, KEY BOARD	
S007	1-554-303-00	SWITCH, KEY BOARD	
S008	1-554-303-00	SWITCH, KEY BOARD	
S009	1-554-303-00	SWITCH, KEY BOARD	
S010	1-554-303-00	SWITCH, KEY BOARD	
S011	1-554-303-00	SWITCH, KEY BOARD	
S012	1-554-303-00	SWITCH, KEY BOARD	
S013	1-554-303-00	SWITCH, KEY BOARD	
S014	1-554-303-00	SWITCH, KEY BOARD	
S015	1-554-303-00	SWITCH, KEY BOARD	
S016	1-554-303-00	SWITCH, KEY BOARD	
S017	1-554-303-00	SWITCH, KEY BOARD	
S018	1-554-303-00	SWITCH, KEY BOARD	
S019	1-516-640-00	SWITCH, SLIDE	
S020	1-554-303-00	SWITCH, KEY BOARD	
S021	1-554-303-00	SWITCH, KEY BOARD	
S022	1-516-640-00	SWITCH, SLIDE	
S023	1-516-640-00	SWITCH, SLIDE	
S024	1-554-303-00	SWITCH, KEY BOARD	
S025	1-554-303-00	SWITCH, KEY BOARD	
S026	1-554-303-00	SWITCH, KEY BOARD	

Ref.No.	Part No.	Description	Remark
		CRYSTAL	
X001	1-527-476-00	OSCILLATOR, CERAMIC	
		**********	
	*A-1330-546-A	C BOARD, COMPLETE **********	
	1-526-767-00	SOCKET, CRT (UP TO Serial No. 13,000)	
	1-526-812-11	SOCKET, CRT (Serial No. 13,001 AND LATER)	
	1-557-582-11	LEAD ASSY, HIGH-VOLTAGE	
	*4-363-404-00	HOLDER, IC	
	4-371-837-01	SPACER (TO-126), BN	
		CONNECTOR	
C1	*1-508-766-00	4P PLUG (M)	
C2	*1-526-575-00	SOCKET, PLUG 1P	
C3	*1-508-786-00	2P PLUG (M)	
C4	*1-508-786-00	2P PLUG (M)	
		CAPACITOR	
C701	1-101-361-00	CERAMIC 150PF 5% 50V	
C702	1-102-971-00	CERAMIC 82PF 5% 50V	
C703	1-162-115-00	CERAMIC 330PF 10% 2KV	
C704	1-121-999-00	ELECT 10MF 160V	
C705	1-121-999-00	ELECT 10MF 160V	
C706	1-123-254-00	ELECT 10MF 250V	
C707	1-123-382-00	ELECT 3.3MF 20% 100V	
C708	1-123-356-00	ELECT 10MF 20% 50V	
		DIODE	
D701	8-719-911-19	DIODE 1SS119	
D702	8-719-906-92	DIODE EQA01-18R1	
D703	8-719-300-45	DIODE EM1Z	
		COIL	
L701	1-407-689-00	MICRO INDUCTOR 4.7UH	
L702	1-407-688-00	MICRO INDUCTOR 3.9UH	
L703	1-407-687-00	MICRO INDUCTOR 3.3UH	
		NEON LAMP	
NL701	1-519-276-00	LAMP, NEON	
NL703	1-519-108-XX	LAMP, NEON ASSY	
		TRANSISTOR	
Q701	8-729-801-97	TRANSISTOR 2SC3503	
Q702	8-729-802-71	TRANSISTOR 2SA1407	
Q703	8-729-801-88	TRANSISTOR 2SA1381	
Q704	8-729-255-12	TRANSISTOR 2SC2551	
		RESISTOR	
R701	1-247-807-00	CARBON 100 5% 1/8W F	
R702	1-247-032-00	CARBON 68 5% 1/8W F	
R703	1-246-992-00	CARBON 180 5% 1/8W F	
R704	1-247-777-00	CARBON 5.6 5% 1/6W	

Ref.No.	Part No.	Description				Remark
R705	1-247-658-00	CARBON	47	5%	1/4W	F
R706	1-247-799-00	CARBON	47	5%	1/6W	
R707	1-205-755-11	CEMENTED	1.5K	5%	15W	
R708	1-202-818-00	SOLID	1K		1/2W	
R709	1-202-818-00	SOLID	1K		1/2W	
R710	1-247-179-00	CARBON	100K	5%	1/4W	
R711	1-202-842-51	SOLID	220K		1/2W	
R712	1-247-799-00	CARBON	47	5%	1/8W	F
R713	1-247-155-00	CARBON	10K	5%	1/4W	
R714	1-247-155-00	CARBON	10K	5%	1/4W	
R715	1-247-817-00	CARBON	270	5%	1/8W	F
R716	1-212-366-00	METAL OXIDE	3.3	5%	1W	F
R717	1-202-549-00	SOLID	100	10%	1/2W	
		VARIABLE RESISTOR				
RV701	1-230-236-11	RES, ADJ, CERAMIC CARBON 47K				
		SPARK GAP				
SG701	1-519-063-XX	DISCHARGING GAP				
SG702	1-519-063-XX	DISCHARGING GAP				
		**********				
	*A-1340-644-A	D BOARD, COMPLETE				
		**********				
	*1-533-146-00	HOLDER, FUSE				
	4-342-013-00	SPACER, MICA				
	4-343-123-00	RETAINER, AC CORD				
	*4-363-404-00	HOLDER, IC				
	4-365-216-00	SPACER, MICA				
		CAPACITOR				
C501	1-106-182-00	MYLAR	0.0027MF	10%	100V	
C502	1-123-380-00	ELECT	1MF	20%	50V	
C503	1-106-178-00	MYLAR	0.0018MF	10%	100V	
C504	1-123-586-00	ELECT	0.1MF	20%	50V	
C505	1-130-488-00	MYLAR	0.027MF	5%	50V	
C506	1-123-321-00	ELECT	220MF	20%	16V	
C507	1-131-498-00	TANTALUM	1MF	10%	25V	
C508	1-102-922-00	CERAMIC	110PF	5%	50V	
C509	1-123-307-00	ELECT	100MF	20%	10V	
C510	1-123-369-00	ELECT	4.7MF	20%	25V	
C511	1-130-490-51	MYLAR	0.039MF	5%	50V	
C512	1-102-980-00	CERAMIC	270PF	5%	50V	
C513	1-123-318-00	ELECT	33MF	20%	16V	
C514	1-102-820-00	CERAMIC	330PF	5%	50V	
C515	1-123-381-00	ELECT	2.2MF	20%	50V	
C516	1-106-188-00	MYLAR	0.0047MF	10%	100V	
C519	1-123-349-00	ELECT	1000MF	20%	35V	
C521	1-123-380-00	ELECT	1MF	20%	50V	
C522	1-123-330-00	ELECT	22MF	20%	16V	
C523	1-123-349-00	ELECT	1000MF	20%	35V	
C524	1-123-359-00	ELECT	47MF	20%	50V	

Ref.No.	Part No.	Description			Remark
C525	1-123-331-00	ELECT	33MF	20%	25V
C526	1-123-335-00	ELECT	330MF	20%	25V
C527	1-123-356-00	ELECT	10MF	20%	25V
C528	1-108-818-11	MYLAR	0.15MF	5%	50V
C529	1-130-491-00	MYLAR	0.047MF	5%	50V
C530	1-102-157-00	CERAMIC	560PF	10%	500V
C531	1-106-367-00	MYLAR	0.01MF	10%	200V
C532	1-136-091-00	FILM	0.0068MF	3%	2KV
C533	1-162-115-00	CERAMIC	330PF	10%	2KV
C534	1-108-420-00	MYLAR	0.0082MF	10%	200V
C535	1-123-307-00	ELECT	100MF	20%	6.3V
C536	1-123-307-00	ELECT	100MF	20%	6.3V
C538	1-123-266-00	ELECT	1.5MF	20%	160V
C539	1-123-231-00	ELECT	3.3MF	20%	50V
C540	1-123-382-00	ELECT	3.3MF	20%	100V
C541	1-123-026-00	ELECT	2.2MF		160V
C542	1-136-115-00	FILM	0.56MF	5%	200V
C543	1-130-491-00	MYLAR	0.047MF	5%	50V
C544	1-102-157-00	CERAMIC	560PF	10%	500V
C545	1-106-367-00	MYLAR	0.01MF	10%	200V
C546 ⚠	1-162-115-51	CERAMIC	330PF	10%	2KV
C547 ⚠	1-136-073-11	FILM	0.0073MF	3%	2KV
C548	1-123-372-00	ELECT	33MF	20%	50V
C549	1-123-382-00	ELECT	3.3MF	20%	100V
C550	1-123-024-00	ELECT	33MF		160V
C551	1-123-933-00	ELECT	10MF		160V
C552	1-123-332-00	ELECT	47MF	20%	25V
C553	1-123-330-00	ELECT	22MF	20%	25V
C554	1-123-330-00	ELECT	22MF	20%	16V
C555	1-123-321-00	ELECT	220MF	20%	16V
C556	1-123-330-00	ELECT	22MF	20%	16V
C557	1-123-334-00	ELECT	220MF	20%	25V
C558	1-123-330-00	ELECT	22MF	20%	16V
C559	1-123-330-00	ELECT	22MF	20%	16V
C560	1-123-339-00	ELECT	3300MF	20%	25V
C561	1-102-074-00	CERAMIC	0.001MF	10%	50V
C562	1-123-326-00	ELECT	3300MF	20%	16V
C563	1-123-356-00	ELECT	10MF	20%	25V
C564	1-102-121-00	CERAMIC	0.0022MF	10%	50V
C565	1-123-357-00	ELECT	22MF	20%	50V
C601 ⚠	1-130-680-51	FILM	0.1MF	20%	125V
C602 ⚠	1-130-680-51	FILM	0.1MF	20%	125V
C603	1-161-743-00	CERAMIC	0.0047MF		400V
C604	1-161-743-00	CERAMIC	0.0047MF		400V
C605	1-161-743-00	CERAMIC	0.0047MF		400V
C606	1-125-295-00	ELECT(BLOCK)	560MF	20%	200V
C607	1-108-579-00	MYLAR	0.01MF	5%	50V
C609	1-106-172-00	MYLAR	0.001MF	10%	100V
C610	1-106-172-00	MYLAR	0.001MF	10%	100V
C611	1-161-743-00	CERAMIC	0.0047MF		400V
		CONNECTOR			
D1	*1-564-445-11	PLUG, CONNECTOR (2.5MM) 9P			

NOTE:

The components identified by shading and mark ⚠ are critical for safety. Replace only with part number specified.

D

Ref.No.	Part No.	Description	Remark
D2	*1-564-354-00	PLUG, CONNECTOR (2.5MM) 3P	
D3	*1-564-444-11	PLUG, CONNECTOR (2.5MM) 8P	
D4	*1-564-443-11	PLUG, CONNECTOR (2.5MM) 7P	
D5	*1-508-766-00	4P PLUG (M)	
D6	*1-564-442-11	PLUG, CONNECTOR (2.5MM) 6P	
D7	*1-564-354-21	PLUG, CONNECTOR (2.5MM) 3P	
D8	*1-508-766-00	4P PLUG (M)	
D9	*1-506-347-21	4P PLUG	
D10	*1-564-440-11	PLUG, CONNECTOR (2.5MM) 4P	
D11	*1-508-765-00	3P PLUG (M)	
D12	*1-508-767-00	5P PLUG	
D14	*1-506-371-00	2P PLUG (L)	
D15	*1-564-354-00	PLUG, CONNECTOR (2.5MM) 3P	
D16	*1-508-765-00	3P PLUG (M)	
D18	*1-560-467-00	PIN, CONNECTOR 4P	
D19	*1-564-440-11	PLUG, CONNECTOR (2.5MM) 4P	
D21	*1-506-349-21	3P PLUG (L)	
D22	*1-564-441-11	PLUG, CONNECTOR (2.5MM) 5P	
D23	*1-508-786-00	2P PLUG (M)	
D24	*1-508-786-00	2P PLUG (M)	
D25	*1-508-786-00	2P PLUG (M)	
D26	*1-508-784-00	1P PLUG	
D26	*1-508-786-00	2P PLUG (M)	
		DIODE	
D501	8-719-911-19	DIODE 1SS119	
D502	8-719-911-19	DIODE 1SS119	
D503	8-719-100-35	DIODE RD5.6E-B2	
D504 ⚠	8-719-815-55	DIODE 1S1555	
D505	8-719-911-19	DIODE 1SS119	
D507	8-719-300-45	DIODE EM1Z	
D508	8-719-305-15	DIODE GH3F	
D509	8-719-901-93	DIODE V19E	
D510	8-719-901-93	DIODE V19E	
D512	8-719-903-09	DIODE V30N	
D513	8-719-901-93	DIODE V19E	
D514	8-719-901-93	DIODE V19E	
D515	8-719-901-93	DIODE V19E	
D516 ⚠	8-719-100-68	DIODE RD13E-B2	
D517	8-719-100-68	DIODE RD13E-B2	
D518	8-719-100-38	DIODE RD6.2E-B2	
D519	8-719-901-19	DIODE V11N	
D520	8-719-100-50	DIODE RD9.1E-B1	
D521	8-719-911-19	DIODE 1SS119	
D601	8-719-911-55	DIODE U05G	
D602	8-719-911-55	DIODE U05G	
D603	8-719-911-55	DIODE U05G	
D604	8-719-911-55	DIODE U05G	
D606	8-719-911-19	DIODE 1SS119	
		FUSE	
F501 ⚠	1-532-555-11	FUSE, GLASS TUBE 125V/1.6A	
F601 ⚠	1-532-579-11	FUSE, GLASS TUBE 125V/4.0A	
F602 ⚠	1-532-557-11	FUSE, GLASS TUBE 125V/3.15A	
		IC	
IC501	8-752-001-31	IC CX20013A	
IC503	8-759-708-05	IC NJM78L05A	
		COIL	
L502	1-435-055-21	COIL, PHASE ADJUST	
L503	1-407-365-00	COIL, CHOKE	
L504	1-407-365-00	COIL, CHOKE	
L505	1-459-104-00	COIL, DUST CORE	
L506	1-459-104-00	COIL, DUST CORE	
L507	1-408-349-00	COIL, CHOKE	
L508	1-407-365-00	COIL, CHOKE	
L509	1-459-155-00	COIL (WITH CORE) 45MH	
LF601 ⚠	1-421-259-21	COIL, LINE FILTER	
LF602 ⚠	1-421-259-21	COIL, LINE FILTER	
		TRANSISTOR	
Q501	8-729-245-83	TRANSISTOR 2SC2458	
Q502	8-729-245-83	TRANSISTOR 2SC2458	
Q503	8-729-245-83	TRANSISTOR 2SC2458	
Q504	8-729-245-83	TRANSISTOR 2SC2458	
Q505	8-729-168-82	TRANSISTOR 2SC2688	
Q506	8-729-800-35	TRANSISTOR 2SD1397	
Q507	8-729-177-43	TRANSISTOR 2SD774	
Q508	8-729-103-43	TRANSISTOR 2SB734	
Q509	8-729-225-34	TRANSISTOR 2SC2534	
Q510	8-729-255-12	TRANSISTOR 2SC2551	
Q511	8-729-168-82	TRANSISTOR 2SC2688	
Q512	8-729-800-87	TRANSISTOR 2SD1398	
Q513 ⚠	8-729-174-33	TRANSISTOR 2SD743-Q	
Q514	8-729-104-33	TRANSISTOR 2SD743A	
Q515	8-729-204-83	TRANSISTOR 2SA1048GR	
Q516	8-729-177-23	TRANSISTOR 2SB772	
Q517	8-729-315-63	TRANSISTOR 2SB856	
Q518	8-729-204-83	TRANSISTOR 2SA1048GR	
Q519	8-729-245-83	TRANSISTOR 2SC2458	
Q520	8-729-245-83	TRANSISTOR 2SC2458	
Q601	8-765-082-20	TRANSISTOR 2SA896	
Q602	8-729-245-83	TRANSISTOR 2SC2458	
Q603	8-729-245-83	TRANSISTOR 2SC2458	
Q604	8-729-204-83	TRANSISTOR 2SA1048GR	
		RESISTOR	
R501	1-247-809-00	CARBON 120 5% 1/6W	
R503	1-247-828-00	CARBON 750 5% 1/6W	
R504	1-247-107-00	CARBON 100 5% 1/4W	
R505	1-247-791-00	CARBON 22 5% 1/8W	F
R506	1-247-847-00	CARBON 4.7K 5% 1/6W	
R507	1-247-839-00	CARBON 2.2K 5% 1/6W	
R508	1-247-847-00	CARBON 4.7K 5% 1/6W	
R509	1-247-839-00	CARBON 2.2K 5% 1/6W	

NOTE:

The components identified by shading and mark ⚠ are critical for safety. Replace only with part number specified.

Ref.No.	Part No.	Description				Remark
R510	1-247-847-00	CARBON	4.7K	5%	1/6W	
R511	1-247-852-00	CARBON	7.5K	5%	1/6W	
R512	1-247-823-00	CARBON	470	5%	1/6W	
R513	1-247-846-00	CARBON	4.3K	5%	1/6W	
R514	1-247-842-00	CARBON	3K	5%	1/6W	
R515	1-247-887-00	CARBON	220K	5%	1/6W	
R516	1-247-859-00	CARBON	15K	5%	1/6W	
R517	1-247-855-00	CARBON	10K	5%	1/6W	
R518	1-247-873-00	CARBON	56K	5%	1/6W	
R519	1-247-791-00	CARBON	22	5%	1/8W	F
R520	1-247-845-00	CARBON	3.9K	5%	1/6W	
R521	1-246-491-25	CARBON	5.6K	5%	1/4W	
R522	1-247-823-00	CARBON	470	5%	1/6W	
R523	1-247-875-00	CARBON	68K	5%	1/6W	
R524	1-247-871-00	CARBON	47K	5%	1/6W	
R525	1-247-831-00	CARBON	1K	5%	1/6W	
R526	1-215-467-00	METAL	82K	1%	1/6W	
⊠R527 ⚠.		CARBON			1/6W	
⊠R528 ⚠.		CARBON			1/6W	
R529	1-247-877-00	CARBON	82K	5%	1/6W	
R530	1-247-131-00	CARBON	1K	5%	1/4W	
R532	1-247-821-00	CARBON	390	5%	1/6W	
R533	1-247-827-00	CARBON	680	5%	1/6W	
R534	1-247-847-00	CARBON	4.7K	5%	1/6W	
R535	1-247-839-00	CARBON	2.2K	5%	1/6W	
R536	1-215-079-00	METAL OXIDE	0.82	5%	2W	F
R537	1-247-847-00	CARBON	4.7K	5%	1/6W	
R538	1-247-831-00	CARBON	1K	5%	1/6W	
R539	1-247-819-00	CARBON	330	5%	1/6W	
R540	1-246-523-00	CARBON	120K	5%	1/4W	
R541	1-247-873-00	CARBON	56K	5%	1/6W	
R542	1-247-839-00	CARBON	2.2K	5%	1/6W	
R543	1-247-857-00	CARBON	12K	5%	1/6W	
R544	1-247-131-00	CARBON	1K	5%	1/4W	
R545	1-247-133-00	CARBON	1.2K	5%	1/4W	
R546	1-247-131-00	CARBON	1K	5%	1/4W	
R547	1-247-827-00	CARBON	680	5%	1/6W	
R548	1-247-839-00	CARBON	2.2K	5%	1/6W	
R549	1-206-686-00	METAL OXIDE	8.2K	5%	2W	F
R550	1-206-650-00	METAL OXIDE	270	5%	2W	F
R551	1-206-463-00	METAL OXIDE	10	5%	2W	F
R553	1-206-660-00	METAL OXIDE	680	5%	2W	F
R554	1-247-831-00	CARBON	1K	5%	1/6W	
R555	1-206-479-00	METAL OXIDE	47	5%	2W	F
R556	1-247-831-00	CARBON	1K	5%	1/8W	F
R557	1-247-865-00	CARBON	27K	5%	1/6W	
R558	1-246-515-00	CARBON	56K	5%	1/4W	
R559	1-247-827-00	CARBON	680	5%	1/6W	
R560	1-247-839-00	CARBON	2.2K	5%	1/6W	
R561	1-206-682-00	METAL OXIDE	5.6K	5%	2W	F
R562	1-247-636-00	CARBON	0.47	5%	1/8W	F
R563	1-247-636-00	CARBON	0.47	5%	1/8W	F
R564	1-207-678-00	WIREWOUND	10	10%	5W	F

Ref.No.	Part No.	Description				Remark
R565	1-247-680-11	CARBON	1	5%	1/2W	F
R566	1-247-817-00	CARBON	270	5%	1/8W	F
R567	1-247-032-00	CARBON	68	5%	1/8W	F
R568	1-247-799-00	CARBON	47	5%	1/8W	F
R569	1-206-471-00	METAL OXIDE	22	5%	2W	F
R570	1-212-370-00	METAL OXIDE	6.8	5%	1W	F
R571	1-247-831-00	CARBON	1K	5%	1/6W	
R572	1-212-372-00	METAL OXIDE	10	5%	1W	F
R573	1-247-827-00	CARBON	680	5%	1/6W	
R574	1-206-694-00	METAL OXIDE	18K	5%	2W	F
R575	1-217-300-00	WIREWOUND	15	10%	5W	F
R576	1-247-831-00	CARBON	1K	5%	1/6W	
R577	1-247-835-00	CARBON	1.5K	5%	1/6W	
R578	1-247-843-00	CARBON	3.3K	5%	1/6W	
R579	1-247-841-00	CARBON	2.7K	5%	1/6W	
R580	1-247-851-00	CARBON	6.8K	5%	1/6W	
R581	1-247-851-00	CARBON	6.8K	5%	1/6W	
R582 ⚠.	1-247-839-31	CARBON	2.2K	5%	1/6W	
R583	1-247-815-00	CARBON	220	5%	1/6W	
R584	1-247-636-00	CARBON	0.47	5%	1/8W	F
R585	1-247-636-00	CARBON	0.47	5%	1/8W	F
R586	1-247-636-00	CARBON	0.47	5%	1/8W	F
R587	1-246-463-25	CARBON	390	5%	1/4W	
R588	1-247-831-00	CARBON	1K	5%	1/6W	
R589	1-247-903-00	CARBON	1M	5%	1/6W	
R601 ⚠.	1-202-729-51	SOLID	6.8M	10%	1/2W	
R602	1-202-723-00	SOLID	2.2M	10%	1/2W	
R604	1-202-842-51	SOLID	220K		1/2W	
R605	1-213-149-00	METAL OXIDE	3.3	5%	1W	F
R606	1-247-855-00	CARBON	10K	5%	1/6W	
R607	1-247-879-00	CARBON	100K	5%	1/6W	
R608	1-247-831-00	CARBON	1K	5%	1/6W	
R609	1-247-831-00	CARBON	1K	5%	1/6W	
R610	1-247-859-00	CARBON	15K	5%	1/6W	
R611	1-247-831-00	CARBON	1K	5%	1/6W	
R612	1-247-859-00	CARBON	15K	5%	1/6W	
R613	1-213-150-00	METAL OXIDE	3.9K	5%	1W	F
R614	1-247-839-00	CARBON	2.2K	5%	1/6W	
R615	1-247-857-00	CARBON	12K	5%	1/6W	
R616	1-247-831-00	CARBON	1K	5%	1/6W	

VARIABLE RESISTOR

RV501	1-228-724-00	RES, ADJ, CERAMIC CARBON 10K
RV502	1-228-727-00	RES, ADJ, CERAMIC CARBON 47K
RV503	1-228-723-00	RES, ADJ, CERAMIC CARBON 4.7K
RV504	1-228-723-00	RES, ADJ, CERAMIC CARBON 4.7K
RV505	1-228-720-00	RES, ADJ, CERAMIC CARBON 1K

RELAY

RY601⚠.	1-515-338-11	RELAY

SWITCH

S501	1-554-186-00	SWITCH, LEVER

The components identified by ⊠ in this manual have been carefully factory-selected for each set in order to satisfy regulations regarding X-ray radiation. Should replacement be required, replace only with the value originally used.

NOTE:

The components identified by shading and mark ⚠ are critical for safety. Replace only with part number specified.

PJ ELECTRICAL PARTS LIST

D V T

Ref.No.	Part No.	Description			Remark
		TRANSFORMER			
T501	1-421-245-11	TRANSFOMER, PZN CUSHION			
T502	1-437-090-00	HDT			
T503	1-439-345-11	HOT			
T504	1-437-090-00	HDT			
T505 ⚠	1-439-344-11	LOT 8.5MMH			
T603	1-427-544-11	TRANSFORMER, OUTPUT (MPX.T)			
**********					
	*1-613-053-11	V BOARD *******			
		CAPACITOR			
C041	1-123-345-00	ELECT	100MF	20%	35V
C042	1-102-129-00	CERAMIC	0.01MF	10%	50V
C043	1-102-824-00	CERAMIC	470PF	5%	50V
		DIODE			
D041	8-719-300-45	DIODE EM1Z			
		IC			
IC041	8-759-113-78	IC UPC1378H-L			
		COIL			
L041	1-408-411-00	MICRO INDUCTOR 15UH			
		RESISTOR			
R041	1-247-845-00	CARBON	3.9K	5%	1/6W
R042	1-247-119-00	CARBON	330	5%	1/4W
		CONNECTOR			
V1	*1-564-441-11	PLUG, CONNECTOR (2.5MM) 5P			
**********					
	*A-1389-575-A	T BOARD, COMPLETE **********			
	1-557-583-11	LEAD ASSY, HIGH-VOLTAGE			
	4-373-029-01	SPACER, MICA			
		CAPACITOR			
C051	1-123-330-00	ELECT	22MF	20%	16V
C052	1-123-332-00	ELECT	47MF	20%	25V
C053	1-123-332-00	ELECT	47MF	20%	25V
C054	1-123-330-00	ELECT	22MF	20%	25V
C055	1-123-931-00	ELECT	3.3MF	20%	160V
C056	1-106-172-00	MYLAR	0.001MF	10%	100V
C057	1-106-351-00	MYLAR	0.0022MF	10%	200V
C058	1-162-115-00	CERAMIC	330PF	10%	2KV
C059	1-162-130-11	CERAMIC	180PF	10%	2KV
C060	1-102-430-00	CERAMIC	33PF	10%	3KV
C062	1-123-330-00	ELECT	22MF	20%	25V

Ref.No.	Part No.	Description			Remark
		DIODE			
D051	8-719-300-45	DIODE EM1Z			
D052	8-719-300-45	DIODE EM1Z			
D053	8-719-300-45	DIODE EM1Z			
D054	8-719-300-45	DIODE EM1Z			
D055	8-719-100-68	DIODE RD13E-B2			
D056	8-719-300-45	DIODE EM1Z			
D057	8-719-901-19	DIODE V11N			
		IC			
IC051	8-759-981-00	IC TL081CP			
		COIL			
L051	1-459-112-00	COIL, DRUM DUST CORE(HDI)			
		TRANSISTOR			
Q051	8-729-255-12	TRANSISTOR 2SC2551			
Q052	8-729-255-12	TRANSISTOR 2SC2551			
Q053	8-729-188-23	TRANSISTOR 2SD882			
Q054	8-729-255-12	TRANSISTOR 2SC2551			
Q055	8-729-188-23	TRANSISTOR 2SD882			
Q056	8-729-255-12	TRANSISTOR 2SC2551			
Q057	8-729-255-12	TRANSISTOR 2SC2551			
Q058	8-729-188-23	TRANSISTOR 2SD882			
Q059	8-729-255-12	TRANSISTOR 2SC2551			
Q060	8-729-188-23	TRANSISTOR 2SD882			
Q061	8-729-177-43	TRANSISTOR 2SD774			
Q062	8-729-245-83	TRANSISTOR 2SC2458			
Q063	8-719-177-43	TRANSISTOR 2SD774			
		RESISTOR			
R051	1-247-153-00	CARBON	8.2K	5%	1/4W
R052	1-247-153-00	CARBON	1.2K	5%	1/4W
R053	1-247-867-00	CARBON	33K	5%	1/6W
R054	1-246-477-00	CARBON	1.5K	5%	1/4W
R055	1-247-153-00	CARBON	8.2K	5%	1/4W
R056	1-247-133-00	CARBON	1.2K	5%	1/4W
R057	1-247-867-00	CARBON	33K	5%	1/6W
R058	1-247-835-00	CARBON	1.5K	5%	1/6W
R059	1-217-300-00	WIREWOUND	15	10%	5W F
R060	1-247-831-00	CARBON	1K	5%	1/6W
R061	1-246-493-25	CARBON	6.8K	5%	1/4W
R062	1-247-861-00	CARBON	18K	5%	1/6W
R063	1-247-831-00	CARBON	1K	5%	1/6W
R064	1-247-847-00	CARBON	4.7K	5%	1/6W
R065	1-247-863-00	CARBON	22K	5%	1/6W
R066	1-247-099-00	CARBON	47	5%	1/4W
R067	1-246-515-00	CARBON	56K	5%	1/4W
R068	1-246-527-00	CARBON	180K	5%	1/4W

NOTE:

The components identified by shading and mark ⚠ are critical for safety. Replace only with part number specified.

Ref.No.	Part No.	Description				Remark
R069	1-247-855-00	CARBON	10K	5%	1/6W	
R070	1-247-881-00	CARBON	120K	5%	1/6W	
R071	1-247-855-00	CARBON	10K	5%	1/6W	
R072	1-246-981-00	CARBON	4.7	5%	1/8W	F
		VARIABLE RESISTOR				
RV051	1-228-725-00	RES, ADJ, CERAMIC CARBON 22K				
RV052	1-228-717-00	RES, ADJ, CERAMIC CARBON 220				
		CONNECTOR				
T1	1-564-442-11	PLUG, CONNECTOR (2.5MM) 6P				
T2	1-564-354-00	PLUG, CONNECTOR (2.5MM) 3P				
T3	1-564-442-11	PLUG, CONNECTOR (2.5MM) 6P				
		TRANSFORMER				
T051	1-421-682-11	DFT				
T052	1-407-849-00	TRANSFORMER, D.F				
**********						
		MISCELLANEOUS **********				
⚠	1-451-253-11	DEFLECTION YOKE (EY-7)				
⚠	1-452-334-11	NECK ASSY, CRT (NA364)				
⚠	1-453-098-11	DC BLOCK, HIGH-VOLTAGE				
⚠	1-551-286-12	CORD,POWER (Serial No.13,001 AND LATER)				
	1-536-678-21	ANTENNA BLOCK				
*	1-555-110-00	CABLE, PIN				
⚠	1-555-465-11	CORD, POWER (UP TO Serial No. 13,000)				
M9001	8-835-131-01	MOTOR, DC (DNR-7800A)				
R9001 ⚠	1-205-756-11	RES, CEMENT WIREWOUND 1.8 20W				
S9001 ⚠	1-553-584-12	SWITCH, PUSH (POWER)				
S9002	1-553-578-11	SWITCH, MICRO				
S9003	1-553-578-11	SWITCH, MICRO				
SP9001	1-503-193-00	SPEAKER				
T402 ⚠	1-439-346-11	TRANSFORMER ASSY, FLYBACK				
V901 ⚠	8-737-051-05	CRT (EM-7)				
**********						

ACCESSORIES AND PACKING MATERIALS
****

Part No.	Description	Remark
3-660-986-00	BAG, PROTECTION	
3-701-630-00	BAG, POLYETHYLENE	
4-373-093-01	INDIVIDUAL CARTON	
4-373-094-01	CUSHION (UPPER) (ASSY)	
4-373-096-01	CUSHION (FRONT) (UPPER)	
4-373-095-01	CUSHION (LOWER) (ASSY)	
4-373-104-01	SPACER	
4-491-213-22	INSTRUCTION	
4-493-987-21	MANUAL, INSTRUCTION	

NOTE:

The components identified by shading and mark ⚠ are critical for safety. Replace only with part number specified.

SECTION 13
VIDEO PARTS LIST
(Video : FP-60)

TABLE OF CONTENTS

Title	*Page*
• VIDEO PARTS LIST	
MA-6 Board	13-1
MC-1 Board	13-3
RP-11 Board	13-4
MB-5 Board	13-5
FD-3 Board	13-6
OM-1 Board	13-8
LM-11 Board	13-9
YF-1 Board	13-9
YM-1 Board	13-11
YS-1 Board	13-11
PE-3 Board	13-13
DE-2 Board	13-13
CM-4 Board	13-14
VB-1 Board	13-15
JG-1 Board	13-15
RM-9 Board	13-16
SV-11 Board	13-18
SP-1 Board	13-20
SD-1 Board	13-20
PC-5 Board	13-21
AD-9 Board	13-22
TS-43 Board	13-22
LU-1 Board	13-22

VIDEO PARTS LIST

• VIDEO PARTS LIST

NOTE:

The components identified by shading and mark ⚠ are critical for safety. Replace only with part number specified.

When indicating parts by reference number, please include the board name.

- Due to standardization, replacements in the parts list may be different from the parts specified in the diagrams or the components used on the set.
- All variable and adjustable resistors have characteristic curve B, unless otherwise noted.

RESISTORS

- All resistors are in ohms
- F : nonflammable

- Items marked "*" are not stocked since they are seldom required for routine service. Some delay should be anticipated when ordering these items.

CAPACITORS

- MF : μF, PF : μμF

COILS

- MMH : mH, UH : μH

Ref.No	Part No.	Description				Remark
	*A-6725-399-A	MA-6 BOARD, COMPLETE				
		**********				
		BORDS				
	*A-6711-393-A	YF-1 BOARD, COMPLETE				
	*A-6711-394-A	YM-1 BOARD, COMPLETE				
	*A-6711-395-A	YS-1 BOARD, COMPLETE				
	*A-6711-396-A	PE-3 BOARD, COMPLETE				
	*A-6711-397-A	DE-2 BOARD, COMPLETE				
	*A-6711-398-A	CM-4 BOARD, COMPLETE				
	*A-6711-400-A	VB-1 BOARD, COMPLETE				
	*A-6711-561-A	JG-1 BOARD, COMPLETE				
	*A-6715-176-A	RM-9 BOARD, COMPLETE				
	*A-6715-177-A	RS-1 BOARD, COMPLETE				
	*A-6715-178-A	SV-11 BOARD, COMPLETE				
	*A-6715-179-A	SP-1 BOARD, COMPLETE				
	*A-6715-236-A	SD-1 BOARD, COMPLETE				
	*A-6723-252-A	PC-5 BOARD, COMPLETE				
	*1-613-192-11	LU-1 BOARD				
	(The boards shown above contain the parts of structure at the other pages.)					
		CAPACITOR				
C101	1-124-227-51	ELECT	10MF	20%	10V	
C102	1-124-229-00	ELECT	33MF	20%	10V	
C103	1-124-229-00	ELECT	33MF	20%	10V	
C104	1-124-227-51	ELECT	10MF	20%	10V	
C105	1-124-227-51	ELECT	10MF	20%	10V	
C106	1-124-234-00	ELECT	22MF	20%	10V	
C107	1-124-234-00	ELECT	22MF	20%	10V	
C108	1-124-234-00	ELECT	22MF	20%	10V	
C109	1-124-234-00	ELECT	22MF	20%	10V	
C110	1-124-227-51	ELECT	10MF	20%	10V	
C112	1-124-227-51	ELECT	10MF	20%	10V	
C113	1-124-229-00	ELECT	33MF	20%	10V	
C114	1-110-078-00	MYLAR	0.033MF	5%	25V	
C116	1-124-236-00	ELECT	47MF	20%	10V	
C117	1-124-229-00	ELECT	33MF	20%	10V	
C118	1-124-236-00	ELECT	47MF	20%	10V	
C121	1-124-227-51	ELECT	10MF	20%	10V	
C122	1-124-236-00	ELECT	47MF	20%	10V	
C123	1-124-227-51	ELECT	10MF	20%	10V	
C125	1-102-962-00	CERAMIC	30PF	5%	50V	
C127	1-124-234-00	ELECT	22MF	20%	10V	
C128	1-124-234-00	ELECT	22MF	20%	10V	
C129	1-124-236-00	ELECT	47MF	20%	10V	
C130	1-124-227-51	ELECT	10MF	20%	10V	
C131	1-124-236-00	ELECT	47MF	20%	10V	
C132	1-124-227-51	ELECT	10MF	20%	10V	
C133	1-124-227-51	ELECT	10MF	20%	10V	
C134	1-161-013-00	CERAMIC	0.01MF	10%	25V	
C138	1-124-227-51	ELECT	10MF	20%	10V	
C139	1-124-227-51	ELECT	10MF	20%	10V	
C140	1-124-227-51	ELECT	10MF	20%	10V	
C401	1-124-225-00	ELECT	100MF	20%	6.3V	

Ref.No	Part No.	Description				Remark
C402	1-124-225-00	ELECT	100MF	20%	6.3V	
C403	1-130-483-00	MYLAR	0.01MF	5%	50V	
C404	1-124-224-00	ELECT	47MF	20%	6.3V	
C405	1-124-224-00	ELECT	47MF	20%	6.3V	
C406	1-124-224-00	ELECT	47MF	20%	6.3V	
C407	1-124-224-00	ELECT	47MF	20%	6.3V	
C408	1-124-224-00	ELECT	47MF	20%	6.3V	
C409	1-124-235-51	ELECT	33MF	20%	16V	
C501	1-161-051-00	CERAMIC	0.01MF	10%	50V	
C502	1-161-051-00	CERAMIC	0.01MF	10%	50V	
C503	1-102-702-00	CERAMIC	100PF	5%	50V	
C504	1-102-702-00	CERAMIC	100PF	5%	50V	
C505	1-102-702-00	CERAMIC	100PF	5%	50V	
C506	1-102-702-00	CERAMIC	100PF	5%	50V	
C601	1-124-235-51	ELECT	33MF	20%	16V	
C602	1-130-482-00	MYLAR	0.0082MF	5%	50V	
C603	1-130-482-00	MYLAR	0.0082MF	5%	50V	
C604	1-124-235-51	ELECT	33MF	20%	16V	
C605	1-124-168-00	ELECT	100MF	20%	16V	
C606	1-124-235-51	ELECT	33MF	20%	16V	
C607	1-161-057-00	CERAMIC	0.033MF	10%	50V	
C608	1-124-235-51	ELECT	33MF	20%	16V	
C609	1-124-235-51	ELECT	33MF	20%	16V	
C901	1-124-168-00	ELECT	100MF	20%	16V	
C902	1-124-168-00	ELECT	100MF	20%	16V	
C903	1-124-168-00	ELECT	100MF	20%	16V	
C904	1-124-168-00	ELECT	100MF	20%	16V	
C909	1-161-013-00	CERAMIC	0.01MF	10%	25V	
C910	1-161-013-00	CERAMIC	0.01MF	10%	25V	
C911	1-161-013-00	CERAMIC	0.01MF	10%	25V	
C912	1-161-013-00	CERAMIC	0.01MF	10%	25V	
C913	1-161-053-00	CERAMIC	0.015MF	10%	25V	
		FILTER				
CF101	1-567-073-00	FILTER, CERAMIC				
		CONNECTOR				
CN001	*1-560-467-00	PIN, CONNECTOR 4P				
CN002	*1-564-022-00	PIN, CONNECTOR 12P				
CN003	*1-560-461-00	PIN, CONNECTOR 5P				
CN004	*1-564-013-00	PIN, CONNECTOR 3P				
CN005	*1-564-015-00	PIN, CONNECTOR 5P				
CN006	*1-560-466-00	PIN, CONNECTOR 3P				
CN007	*1-564-013-00	PIN, CONNECTOR 3P				
CN008	*1-564-017-00	PIN, CONNECTOR 7P				
CN009	*1-564-014-00	PIN, CONNECTOR 4P				
CN010	1-560-459-00	PIN, CONNECTOR 3P				
CN011	*1-564-013-00	PIN, CONNECTOR 3P				
CN012	*1-564-013-00	PIN, CONNECTOR 3P				
CN013	*1-564-014-00	PIN, CONNECTOR 4P				
CN014	*1-564-012-00	PIN, CONNECTOR 2P				
CN015	*1-564-014-00	PIN, CONNECTOR 4P				

Ref.No	Part No.	Description	Remark
CN016	*1-564-003-00	PIN, CONNECTOR 4P	
CN017	*1-564-012-00	PIN, CONNECTOR 2P	
CN018	*1-564-004-00	PIN, CONNECTOR 5P	
CN024	*1-564-098-00	CONNECTOR, BOARD TO BOARD	
CN025	*1-564-098-00	CONNECTOR, BOARD TO BOARD	
CN026	*1-564-098-00	CONNECTOR, BOARD TO BOARD	
CN027	*1-564-098-00	CONNECTOR, BOARD TO BOARD	
		DIODE	
D401	8-719-982-04	DIODE ERB81-004	
D601	8-719-982-04	DIODE ERB81-004	
D602	8-719-982-04	DIODE ERB81-004	
		DELAY LINE	
DL101	1-415-292-00	DELAY LINE (1H)	
DL102	1-415-293-00	DELAY LINE (1H)	
DL103	1-415-294-00	DELAY LINE (1/2H) 10.7MHZ	
		CONVERTER	
DR901⚠	1-464-245-00	CONVERTER, DC-DC	
		IC	
IC902	8-759-903-02	IC MB8783	
		COIL	
L101	1-408-855-00	MICRO INDUCTOR 15UH	
L401	1-408-857-00	COIL, CHOKE	
L601	1-408-858-00	COIL, CHOKE	
L602	1-408-858-00	COIL, CHOKE	
L603	1-408-858-00	COIL, CHOKE	
		VARIABLE COIL	
LV101	1-459-437-00	COIL, VARIABLE 15UH	
		TRANSISTOR	
Q401⚠	8-729-104-36	TRANSISTOR 2SB1040	
Q402⚠	8-729-378-84	TRANSISTOR 2SD788	
Q601⚠	8-729-104-36	TRANSISTOR 2SB1040	
Q602⚠	8-729-104-36	TRANSISTOR 2SB1040	
		RESISTOR	
R101	1-247-839-00	CARBON 2.2K 5% 1/6W	
R102	1-247-831-00	CARBON 1K 5% 1/6W	
R103	1-247-831-00	CARBON 1K 5% 1/6W	
R105	1-247-879-00	CARBON 100K 5% 1/6W	
R107	1-215-432-00	METAL 3K 1% 1/6W	
R401	1-247-840-00	CARBON 2.4K 5% 1/6W	
R402	1-247-837-00	CARBON 1.8K 5% 1/6W	
R403	1-247-868-00	CARBON 36K 5% 1/6W	
R404	1-247-873-00	CARBON 56K 5% 1/6W	
R405	1-247-883-00	CARBON 150K 5% 1/6W	
R406	1-247-876-00	CARBON 75K 5% 1/6W	
R408	1-247-851-00	CARBON 6.8K 5% 1/6W	
R409	1-247-895-00	CARBON 470K 5% 1/6W	
R410	1-247-879-00	CARBON 100K 5% 1/6W	
R411⚠	1-217-636-00	WIREWOUND 0.47 1W	
R412	1-247-090-00	CARBON 20 5% 1/4W	
R601	1-247-865-00	CARBON 27K 5% 1/6W	
R602	1-247-865-00	CARBON 27K 5% 1/6W	
R603	1-247-867-00	CARBON 33K 5% 1/6W	
R604	1-247-867-00	CARBON 33K 5% 1/6W	
R605⚠	1-217-635-00	WIREWOUND 0.1 1W	
R699	1-247-783-00	CARBON 10 5% 1/6W	
R901	1-247-849-00	CARBON 5.6K 5% 1/6W	
R902	1-247-855-00	CARBON 10K 5% 1/6W	
R904	1-247-855-00	CARBON 10K 5% 1/6W	
R910	1-247-807-00	CARBON 100 5% 1/6W	
R998⚠	1-532-605-00	LINK, IC	
R999⚠	1-532-605-00	LINK, IC	
		VARIABLE RESISTOR	
RV101	1-228-894-00	RES, ADJ, METAL GLAZE 47K	
RV102	1-228-890-00	RES, ADJ, METAL GLAZE 4.7K	
RV103	1-228-890-00	RES, ADJ, METAL GLAZE 4.7K	
RV104	1-228-891-00	RES, ADJ, METAL GLAZE 10K	
RV105	1-228-889-00	RES, ADJ, METAL GLAZE 2.2K	
RV106	1-228-889-00	RES, ADJ, METAL GLAZE 2.2K	
RV108	1-228-889-00	RES, ADJ, METAL GLAZE 2.2K	
RV109	1-228-897-00	RES, ADJ, METAL GLAZE 470K	
RV401	1-228-888-00	RES, ADJ, METAL GLAZE 1K	
RV402	1-228-891-00	RES, ADJ, METAL GLAZE 10K	
RV403	1-228-891-00	RES, ADJ, METAL GLAZE 10K	
RV404	1-228-894-00	RES, ADJ, METAL GLAZE 47K	
RV405	1-228-894-00	RES, ADJ, METAL GLAZE 47K	
RV406	1-228-894-00	RES, ADJ, METAL GLAZE 47K	
RV407	1-228-894-00	RES, ADJ, METAL GLAZE 47K	
RV408	1-228-894-00	RES, ADJ, METAL GLAZE 47K	
RV409	1-228-894-00	RES, ADJ, METAL GLAZE 47K	
RV410	1-228-897-00	RES, ADJ, METAL GLAZE 470K	
RV411	1-228-888-00	RES, ADJ, METAL GLAZE 1K	
RV412	1-228-888-00	RES, ADJ, METAL GLAZE 1K	
RV413	1-228-897-00	RES, ADJ, METAL GLAZE 470K	
RV414	1-228-896-00	RES, ADJ, METAL GLAZE 220K	
RV601	1-228-892-00	RES, ADJ, METAL GLAZE 22K	
RV602	1-228-894-00	RES, ADJ, METAL GLAZE 47K	
		TRANSFORMER	
T101	1-426-124-00	COIL (EQT)	
T102A	1-426-123-00	COIL (BPF)	
T102B	1-426-122-00	COIL (BPF)	
		THERMISTOR	
TH401	1-800-200-00	THERMISTOR S-3K	
TH601	1-800-198-XX	THERMISTOR S-1K	

The components identified by shading and mark ⚠ are critical for safety. Replace only with part number specified.

When indicating parts by reference number, please include the board name.

Ref.No	Part No.	Description				Remark
	*A-6713-216-A	MC-1 BOARD, COMPLETE **********				
	*A-6713-154-A	AD-9 BOARD, COMPLETE				
		(This board shown above contains the parts of structure at the other page.)				
	*3-678-964-00	CASE (MAIN), SHIELD, MC				
		CAPACITOR				
C301	1-124-233-00	ELECT	10MF	20%	16V	
C303	1-124-169-00	ELECT	100MF	20%	10V	
C304	1-124-245-00	ELECT	4.7MF	20%	25V	
C305	1-124-222-00	ELECT	22MF	20%	6.3V	
C306	1-124-224-00	ELECT	47MF	20%	6.3V	
C307	1-124-233-00	ELECT	10MF	20%	16V	
C308	1-163-123-00	CERAMIC CHIP	180PF	5%	50V	
C309	1-124-236-00	ELECT	47MF	20%	10V	
C311	1-124-169-00	ELECT	100MF	20%	10V	
C312	1-163-014-00	CERAMIC CHIP	0.0027MF	10%	50V	
C313	1-163-014-00	CERAMIC CHIP	0.0027MF	10%	50V	
C316	1-130-487-00	MYLAR	0.022MF	5%	50V	
C317	1-130-489-00	MYLAR	0.033MF	5%	50V	
C319	1-130-483-00	MYLAR	0.01MF	5%	50V	
C320	1-130-471-00	MYLAR	0.001MF	5%	50V	
C321	1-130-471-00	MYLAR	0.001MF	5%	50V	
C322	1-124-236-00	ELECT	47MF	20%	10V	
C323	1-130-479-00	MYLAR	0.0047MF	5%	50V	
C324	1-136-047-00	FILM	0.015MF	10%	100V	
C325	1-136-048-00	FILM	0.033MF	10%	100V	
C326	1-124-234-00	ELECT	22MF	20%	10V	
C327	1-130-483-00	MYLAR	0.01MF	5%	50V	
C328	1-130-481-00	MYLAR	0.0068MF	5%	50V	
C329	1-124-245-00	ELECT	4.7MF	20%	25V	
C330	1-163-011-00	CERAMIC CHIP	0.0015MF	10%	50V	
C331	1-124-169-00	ELECT	100MF	20%	10V	
C332	1-124-236-00	ELECT	47MF	20%	10V	
C333	1-124-234-00	ELECT	22MF	20%	10V	
C334	1-124-234-00	ELECT	22MF	20%	10V	
C337	1-124-245-00	ELECT	4.7MF	20%	25V	
		TRIMMER				
CV301	1-141-282-00	CAP, TRIMMER				
		COIL				
L301	1-408-853-00	COIL, CHOKE 7MMH				
L303	1-408-852-00	COIL, CHOKE 560UH				
L304	1-408-854-00	COIL, CHOKE 27MMH				
		TRANSISTOR				
Q301	8-729-100-66	TRANSISTOR 2SC1623				
Q302	8-729-100-66	TRANSISTOR 2SC1623				
Q303	8-729-100-66	TRANSISTOR 2SC1623				
Q304	8-729-100-66	TRANSISTOR 2SC1623				
Q305	8-729-853-63	TRANSISTOR 2SC536SP				
Q306	8-729-853-63	TRANSISTOR 2SC536SP				
Q307	8-729-100-76	TRANSISTOR 2SA812				
		RESISTOR				
R302	1-216-057-00	METAL CHIP	2.2K	5%	1/10W	
R303	1-216-022-00	METAL CHIP	75	5%	1/10W	
R304	1-216-079-00	METAL CHIP	18K	5%	1/10W	
R306	1-216-110-00	METAL CHIP	360K	5%	1/10W	
R307	1-216-085-00	METAL CHIP	33K	5%	1/10W	
R308	1-216-095-00	METAL CHIP	82K	5%	1/10W	
R310	1-216-059-00	METAL CHIP	2.7K	5%	1/10W	
R311	1-216-077-00	METAL CHIP	15K	5%	1/10W	
R312	1-216-073-00	METAL CHIP	10K	5%	1/10W	
R313	1-216-073-00	METAL CHIP	10K	5%	1/10W	
R314	1-216-065-00	METAL CHIP	4.7K	5%	1/10W	
R315	1-216-101-00	METAL CHIP	150K	5%	1/10W	
R316	1-216-029-00	METAL CHIP	150	5%	1/10W	
R317	1-216-036-00	METAL CHIP	300	5%	1/10W	
R318	1-216-001-00	METAL CHIP	10	5%	1/10W	
R319	1-216-093-00	METAL CHIP	68K	5%	1/10W	
R320	1-216-001-00	METAL CHIP	10	5%	1/10W	
R321	1-216-001-00	METAL CHIP	10	5%	1/10W	
R322	1-216-013-00	METAL CHIP	33	5%	1/10W	
R323	1-216-311-00	METAL CHIP	6.8	5%	1/10W	
R324	1-216-085-00	METAL CHIP	33K	5%	1/10W	
R325	1-216-089-00	METAL CHIP	47K	5%	1/10W	
R326	1-216-089-00	METAL CHIP	47K	5%	1/10W	
R328	1-216-086-00	METAL CHIP	36K	5%	1/10W	
R329	1-216-001-00	METAL CHIP	10	5%	1/10W	
R330	1-216-001-00	METAL CHIP	10	5%	1/10W	
R332	1-216-065-00	METAL CHIP	4.7K	5%	1/10W	
R334	1-216-061-00	METAL CHIP	3.3K	5%	1/10W	
R335	1-216-059-00	METAL CHIP	2.7K	5%	1/10W	
R336	1-216-038-00	METAL CHIP	360	5%	1/10W	
R337	1-216-076-00	METAL CHIP	13K	5%	1/10W	
R340	1-216-097-00	METAL CHIP	100K	5%	1/10W	
R341	1-216-105-00	METAL CHIP	220K	5%	1/10W	
		VARIABLE RESISTOR				
RV301	1-228-895-00	RES, ADJ, METAL GLAZE 100K				
RV302	1-228-891-00	RES, ADJ, METAL GLAZE 10K				
RV303	1-228-887-00	RES, ADJ, METAL GLAZE 470				
		TRANSFORMER				
T301	1-433-263-00	TRANSFORMER, OSCILLATOR				
T302	1-433-264-00	TRANSFORMER, OSCILLATOR				

****

When indicating parts by reference number, please include the board name.

RP-11

Ref.No	Part No.	Description			Remark
	*A-6711-402-A	RP-11 BOARD, COMPLETE **********			
	*3-678-940-00	CASE (INNER LID), SHIELD, RP			
	*3-678-941-00	CASE (OUTER LID A), SHIELD, RP			
	*3-678-943-00	CASE (MAIN), SHIELD, RP			
		CAPACITOR			
C001	1-163-033-00	CERAMIC CHIP 0.022MF	10%	25V	
C002	1-124-233-00	ELECT 10MF	20%	16V	
C003	1-163-021-00	CERAMIC CHIP 0.01MF	10%	50V	
C004	1-163-088-00	CERAMIC CHIP 5PF	0.25PF	50V	
C005	1-163-088-00	CERAMIC CHIP 5PF	0.25PF	50V	
C006	1-163-021-00	CERAMIC CHIP 0.01MF	10%	50V	
C007	1-163-033-00	CERAMIC CHIP 0.022MF	10%	25V	
C008	1-163-075-00	CERAMIC CHIP 0.047MF	10%	25V	
C009	1-163-075-00	CERAMIC CHIP 0.047MF	10%	25V	
C010	1-163-033-00	CERAMIC CHIP 0.022MF	10%	25V	
C011	1-124-233-00	ELECT 10MF	20%	16V	
C012	1-163-033-00	CERAMIC CHIP 0.022MF	10%	25V	
C013	1-163-033-00	CERAMIC CHIP 0.022MF	10%	25V	
C014	1-163-033-00	CERAMIC CHIP 0.022MF	10%	25V	
C015	1-163-033-00	CERAMIC CHIP 0.022MF	10%	25V	
C016	1-124-236-00	ELECT 47MF	20%	10V	
C017	1-163-021-00	CERAMIC CHIP 0.01MF	10%	50V	
C018	1-163-021-00	CERAMIC CHIP 0.01MF	10%	50V	
C019	1-163-021-00	CERAMIC CHIP 0.01MF	10%	50V	
C020	1-163-130-00	CERAMIC CHIP 360PF	5%	50V	
C021	1-163-114-00	CERAMIC CHIP 75PF	5%	50V	
C022	1-163-021-00	CERAMIC CHIP 0.01MF	10%	50V	
C023	1-124-233-00	ELECT 10MF	20%	16V	
C024	1-163-033-00	CERAMIC CHIP 0.022MF	10%	25V	
C025	1-163-021-00	CERAMIC CHIP 0.01MF	10%	50V	
C026	1-163-021-00	CERAMIC CHIP 0.01MF	10%	50V	
C027	1-163-081-00	CERAMIC CHIP 0.22MF		25V	
C028	1-163-081-00	CERAMIC CHIP 0.22MF		25V	
C029	1-135-064-00	TANTAL. CHIP 2.2MF	20%	6.3V	
C030	1-163-117-00	CERAMIC CHIP 100PF	5%	50V	
C031	1-163-117-00	CERAMIC CHIP 100PF	5%	50V	
C032	1-163-033-00	CERAMIC CHIP 0.022MF	10%	25V	
C033	1-163-035-00	CERAMIC CHIP 0.047MF		50V	
C034	1-163-035-00	CERAMIC CHIP 0.047MF		50V	
C035	1-163-075-00	CERAMIC CHIP 0.047MF	10%	25V	
C036	1-163-075-00	CERAMIC CHIP 0.047MF	10%	25V	
		CONNECTOR			
CN001	*1-564-016-00	PIN, CONNECTOR 6P			
		DIODE			
D001	8-719-100-05	DIODE 1S2837			
D002	8-719-100-05	DIODE 1S2837			

Ref.No	Part No.	Description			Remark
		IC			
IC001	8-752-000-20	IC CX20002			
IC002	8-759-906-32	IC CX-893A			
		COIL			
L001	1-408-757-00	INDUCTOR CHIP 270UH			
L002	1-408-757-00	INDUCTOR CHIP 270UH			
L003	1-408-896-00	INDUCTOR CHIP 0.15UH			
L004	1-408-896-00	INDUCTOR CHIP 0.15UH			
L005	1-408-756-00	INDUCTOR CHIP 220UH			
L006	1-408-754-00	INDUCTOR CHIP 150UH			
L007	1-408-776-00	INDUCTOR CHIP 8.2UH			
L008	1-408-776-00	INDUCTOR CHIP 8.2UH			
L009	1-408-756-00	INDUCTOR CHIP 220UH			
		TRANSISTOR			
Q001	8-729-100-76	TRANSISTOR 2SA812			
Q002	8-729-199-92	TRANSISTOR 2SD999			
Q003	8-729-100-66	TRANSISTOR 2SC1623			
Q004	8-729-100-66	TRANSISTOR 2SC1623			
		RESISTOR			
R001	1-216-001-00	METAL CHIP	10	5%	1/10W
R002	1-216-036-00	METAL CHIP	300	5%	1/10W
R003	1-216-062-00	METAL CHIP	3.6K	5%	1/10W
R004	1-216-062-00	METAL CHIP	3.6K	5%	1/10W
R005	1-216-001-00	METAL CHIP	10	5%	1/10W
R006	1-216-036-00	METAL CHIP	300	5%	1/10W
R007	1-216-073-00	METAL CHIP	10K	5%	1/10W
R008	1-216-057-00	METAL CHIP	2.2K	5%	1/10W
R009	1-216-048-00	METAL CHIP	910	5%	1/10W
R010	1-216-048-00	METAL CHIP	910	5%	1/10W
R011	1-216-057-00	METAL CHIP	2.2K	5%	1/10W
R012	1-216-049-00	METAL CHIP	1K	5%	1/10W
R013	1-216-049-00	METAL CHIP	1K	5%	1/10W
R014	1-216-070-00	METAL CHIP	7.5K	5%	1/10W
R015	1-216-068-00	METAL CHIP	6.2K	5%	1/10W
R016	1-216-062-00	METAL CHIP	3.6K	5%	1/10W
R017	1-216-086-00	METAL CHIP	36K	5%	1/10W
R018	1-216-085-00	METAL CHIP	33K	5%	1/10W
R019	1-216-095-00	METAL CHIP	82K	5%	1/10W
R020	1-216-053-00	METAL CHIP	1.5K	5%	1/10W
R021	1-216-053-00	METAL CHIP	1.5K	5%	1/10W
R022	1-216-054-00	METAL CHIP	1.6K	5%	1/10W
R023	1-216-043-00	METAL CHIP	560	5%	1/10W
R024	1-216-043-00	METAL CHIP	560	5%	1/10W
R025	1-216-036-00	METAL CHIP	300	5%	1/10W
R026	1-216-053-00	METAL CHIP	1.5K	5%	1/10W
R027	1-216-037-00	METAL CHIP	330	5%	1/10W
R028	1-216-049-00	METAL CHIP	1K	5%	1/10W
R029	1-216-063-00	METAL CHIP	3.9K	5%	1/10W
R030	1-216-089-00	METAL CHIP	47K	5%	1/10W

When indicating parts by reference number, please include the board name.

Ref.No	Part No.	Description	Remark
R031	1-216-073-00	METAL CHIP 10K 5% 1/10W	
		VARIABLE RESISTOR	
RV001	1-228-889-00	RES, ADJ, METAL GLAZE 2.2K	
RV002	1-228-889-00	RES, ADJ, METAL GLAZE 2.2K	
		TRANSFORMER	
T001	1-409-366-00	COIL, TRAP	
		**********	
	*A-6711-560-A	MB-5 BOARD, COMPLETE	
		**********	
		CAPACITOR	
C001	1-124-253-00	ELECT 0.47MF 20% 50V	
C002	1-123-321-00	ELECT 220MF 20% 16V	
C003	1-163-035-00	CERAMIC CHIP 0.047MF 50V	
C004	1-163-035-00	CERAMIC CHIP 0.047MF 50V	
C005	1-163-031-00	CERAMIC CHIP 0.01MF 50V	
C006	1-163-035-00	CERAMIC CHIP 0.047MF 50V	
C007	1-163-034-00	CERAMIC CHIP 0.033MF 50V	
C008	1-163-033-00	CERAMIC CHIP 0.022MF 50V	
C010	1-124-225-00	ELECT 100MF 20% 6.3V	
C011	1-124-225-00	ELECT 100MF 20% 6.3V	
C012	1-163-035-00	CERAMIC CHIP 0.047MF 50V	
		CONNECTOR	
CN003	*1-564-002-00	PIN, CONNECTOR 3P	
CN004	*1-564-013-00	PIN, CONNECTOR 3P	
CN005	*1-564-012-00	PIN, CONNECTOR 2P	
CN006	*1-564-013-00	PIN, CONNECTOR 3P	
CN007	*1-564-012-00	PIN, CONNECTOR 2P	
		DIODE	
D001	8-719-100-05	DIODE 1S2837	
D002	⚠.8-719-911-19	DIODE 1SS119	
D003	⚠.8-719-911-19	DIODE 1SS119	
D004	⚠.8-719-200-02	DIODE 10E-2	
D005	⚠.8-719-911-19	DIODE 1SS119	
D006	⚠.8-719-200-02	DIODE 10E-2	
D007	8-719-105-38	DIODE RD3.0M-B1	
D008	8-719-100-03	DIODE 1S2835	
D009	8-719-100-03	DIODE 1S2835	
D010	⚠.8-719-911-19	DIODE 1SS119	
D011	8-719-911-19	DIODE 1SS119	
D012	⚠.8-719-911-19	DIODE 1SS119	
D013	8-719-911-19	DIODE 1SS119	
D014	8-719-100-05	DIODE 1S2837	
D016	8-719-100-05	DIODE 1S2837	
D017	8-719-100-03	DIODE 1S2835	

Ref.No	Part No.	Description	Remark
		IC	
IC001	8-759-903-02	IC MB88783	
IC002	8-759-100-93	IC UPC393G2	
		TRANSISTOR	
Q001	8-729-199-92	TRANSISTOR 2SD999	
Q002	8-729-199-92	TRANSISTOR 2SD999	
Q003	⚠.8-729-100-76	TRANSISTOR 2SA812	
Q004	8-729-116-42	TRANSISTOR 2SD1164	
Q005	8-729-116-42	TRANSISTOR 2SD1164	
Q006	⚠.8-729-101-07	TRANSISTOR 2SB798	
Q007	⚠.8-729-101-07	TRANSISTOR 2SB798	
Q008	8-729-199-92	TRANSISTOR 2SD999	
Q009	8-729-199-92	TRANSISTOR 2SD999	
Q010	8-729-100-66	TRANSISTOR 2SC1623	
Q011	8-729-100-66	TRANSISTOR 2SC1623	
Q012	8-729-100-66	TRANSISTOR 2SC1623	
Q013	8-729-100-76	TRANSISTOR 2SA812	
Q014	8-729-116-42	TRANSISTOR 2SD1164	
Q015	8-729-100-66	TRANSISTOR 2SC1623	
Q016	8-729-100-66	TRANSISTOR 2SC1623	
Q017	8-729-100-66	TRANSISTOR 2SC1623	
Q018	8-729-100-66	TRANSISTOR 2SC1623	
		RESISTOR	
R001	1-216-081-00	METAL CHIP 22K 5% 1/10W	
R002	1-216-081-00	METAL CHIP 22K 5% 1/10W	
R003	1-216-081-00	METAL CHIP 22K 5% 1/10W	
R004	1-216-061-00	METAL CHIP 3.3K 5% 1/10W	
R006	1-216-089-00	METAL CHIP 47K 5% 1/10W	
R007	1-216-061-00	METAL CHIP 3.3K 5% 1/10W	
R008	1-216-056-00	METAL CHIP 2K 5% 1/10W	
R009	1-216-061-00	METAL CHIP 3.3K 5% 1/10W	
R010	1-216-081-00	METAL CHIP 22K 5% 1/10W	
R011	1-216-061-00	METAL CHIP 3.3K 5% 1/10W	
R012	1-216-056-00	METAL CHIP 2K 5% 1/10W	
R013	1-216-061-00	METAL CHIP 3.3K 5% 1/10W	
R014	1-216-081-00	METAL CHIP 22K 5% 1/10W	
R015	1-216-099-00	METAL CHIP 120K 5% 1/10W	
R016	1-216-074-00	METAL CHIP 11K 5% 1/10W	
R017	1-216-064-00	METAL CHIP 4.3K 5% 1/10W	
R018	1-216-047-00	METAL CHIP 820 5% 1/10W	
R019	1-216-084-00	METAL CHIP 30K 5% 1/10W	
R020	1-216-115-00	METAL CHIP 560K 5% 1/10W	
R021	1-216-081-00	METAL CHIP 22K 5% 1/10W	
R022	1-216-069-00	METAL CHIP 6.8K 5% 1/10W	
R023	1-216-081-00	METAL CHIP 22K 5% 1/10W	
R024	1-216-063-00	METAL CHIP 3.9K 5% 1/10W	
R025	1-216-077-00	METAL CHIP 15K 5% 1/10W	
R026	1-216-077-00	METAL CHIP 15K 5% 1/10W	
R027	1-216-076-00	METAL CHIP 13K 5% 1/10W	
R028	1-216-089-00	METAL CHIP 47K 5% 1/10W	

When indicating parts by reference number, please include the board name.

The components identified by shading and mark ⚠ are critical for safety. Replace only with part number specified.

Ref.No	Part No.	Description				Remark
R029	1-216-066-00	METAL CHIP	5.1K	5%	1/10W	
R030	1-216-080-00	METAL CHIP	20K	5%	1/10W	
R031	1-216-056-00	METAL CHIP	2K	5%	1/10W	
R032	1-216-056-00	METAL CHIP	2K	5%	1/10W	
R033	1-216-073-00	METAL CHIP	10K	5%	1/10W	
R034	1-216-047-00	METAL CHIP	820	5%	1/10W	
R035	1-216-073-00	METAL CHIP	10K	5%	1/10W	
R036	1-216-047-00	METAL CHIP	820	5%	1/10W	
R037	1-216-097-00	METAL CHIP	100K	5%	1/10W	
R038	⚠ 1-532-637-00	LINK, IC				
R039	1-216-097-00	METAL CHIP	100K	5%	1/10W	
R040	1-216-073-00	METAL CHIP	10K	5%	1/10W	
R041	1-216-073-00	METAL CHIP	10K	5%	1/10W	
R042	1-216-073-00	METAL CHIP	10K	5%	1/10W	
R043	1-216-001-00	METAL CHIP	10	5%	1/10W	
R044	⚠ 1-532-637-00	LINK, IC				

****

*A-6717-368-A FD-3 BOARD, COMPLETE
****

*3-678-944-00 REFLECTOR

BUZZER

BZ001	1-529-020-00	BUZZER	

CAPACITOR

C002	1-163-117-00	CERAMIC CHIP	100PF	10%	50V
C003	1-163-117-00	CERAMIC CHIP	100PF	10%	50V
C004	1-135-083-00	TANTAL. CHIP	0.47MF	20%	25V
C005	1-124-225-00	ELECT	100MF	20%	6.3V
C006	1-135-100-21	TANTAL. CHIP	6.8MF	20%	6.3V
C007	1-135-091-00	TANTAL. CHIP	1MF	20%	16V
C008	1-163-013-00	CERAMIC CHIP	0.0022MF	10%	50V
C009	1-163-144-00	CERAMIC CHIP	0.0013MF	5%	50V
C010	1-135-099-00	TANTAL. CHIP	2.2MF	20%	6.3V
C011	1-135-092-21	TANTAL. CHIP	3.3MF	20%	16V
C012	1-135-083-00	TANTAL. CHIP	0.47MF	20%	25V
C013	1-163-038-00	CERAMIC CHIP	0.1MF		25V
C014	1-163-038-00	CERAMIC CHIP	0.1MF		25V
C015	1-135-100-21	TANTAL. CHIP	6.8MF	20%	6.3V
C016	1-135-083-00	TANTAL. CHIP	0.47MF	20%	25V
C017	1-135-083-00	TANTAL. CHIP	0.47MF	20%	25V
C018	1-163-141-00	CERAMIC CHIP	0.001MF	10%	50V
C019	1-163-038-00	CERAMIC CHIP	0.1MF		25V
C101	1-163-035-00	CERAMIC CHIP	0.047MF		50V
C102	1-163-035-00	CERAMIC CHIP	0.047MF		50V
C103	1-163-035-00	CERAMIC CHIP	0.047MF		50V
C104	1-135-100-21	TANTAL. CHIP	6.8MF	20%	6.3V
C105	1-163-038-00	CERAMIC CHIP	0.1MF		25V
C108	1-163-035-00	CERAMIC CHIP	0.047MF		50V
C109	1-163-035-00	CERAMIC CHIP	0.047MF		50V
C110	1-163-035-00	CERAMIC CHIP	0.047MF		50V
C111	1-163-035-00	CERAMIC CHIP	0.047MF		50V
C112	1-163-035-00	CERAMIC CHIP	0.047MF		50V
C113	1-163-035-00	CERAMIC CHIP	0.047MF		50V
C114	1-163-035-00	CERAMIC CHIP	0.047MF		50V
C115	1-161-023-00	CERAMIC	0.068MF	10%	25V
C116	1-161-051-00	CERAMIC	0.01MF	10%	50V

CONNECTOR

CN19	*1-564-007-00	PIN, CONNECTOR 8P	
CN020	*1-564-007-00	PIN, CONNECTOR 8P	
CN021	*1-564-007-00	PIN, CONNECTOR 8P	
CN022	*1-564-007-00	PIN, CONNECTOR 8P	
CN023	*1-564-007-00	PIN, CONNECTOR 8P	
CN024	*1-564-001-11	PIN, CONNECTOR 2P	

CRYSTAL

CR001	1-215-460-00	METAL	43K	1%	1/6W
CR002	1-215-470-00	METAL	110K	1%	1/6W

DIODE

D001	8-719-100-05	DIODE 1S2837
D003	8-719-100-05	DIODE 1S2837
D004	8-719-100-03	DIODE 1S2835
D005	8-719-100-05	DIODE 1S2837
D006	8-719-101-23	DIODE 1SS123
D007	8-719-100-03	DIODE 1S2835
D008	8-719-812-31	DIODE TLR123
D010	8-719-812-30	DIODE TL0123
D011	8-719-105-73	DIODE RD4.7M-B2
D014	8-719-100-05	DIODE 1S2837
D015	8-719-911-06	DIODE 1SS106
D101	8-719-106-17	DIODE RD6.8M-B2

IC

IC001	8-759-101-46	IC UPD7503G-085
IC002	8-759-101-89	IC UPD7508G-572
IC003	8-759-200-82	IC TC4069UBF
IC004	8-759-100-92	IC UPC4250G2
IC005	8-759-200-82	IC TC4069UBF
IC006	8-759-100-93	IC UPC393G2

LIQUID CRYSTAL

LCD001	1-806-579-00	DISPLAY PANEL, LIQUID CRYSTAL

PILOT LAMP

LP001	1-518-259-00	LAMP, PILOT

TRANSISTOR

Q001	8-729-100-66	TRANSISTOR 2SC1623
Q002	8-729-100-66	TRANSISTOR 2SC1623

The components identified by shading and mark ⚠ are critical for safety. Replace only with part number specified.

When indicating parts by reference number, please include the board name.

Ref.No	Part No.	Description				Remark
Q003	8-729-100-66	TRANSISTOR 2SC1623				
Q004	8-729-100-66	TRANSISTOR 2SC1623				
Q005	8-729-100-66	TRANSISTOR 2SC1623				
Q006	8-729-100-66	TRANSISTOR 2SC1623				
Q007	8-729-100-66	TRANSISTOR 2SC1623				
Q016	8-729-100-66	TRANSISTOR 2SC1623				
Q017	8-729-100-66	TRANSISTOR 2SC1623				
Q018	8-729-100-66	TRANSISTOR 2SC1623				
Q019	8-729-100-76	TRANSISTOR 2SA812				
Q020	8-729-100-76	TRANSISTOR 2SA812				
Q021	8-729-100-66	TRANSISTOR 2SC1623				
Q022	8-729-100-66	TRANSISTOR 2SC1623				
Q023	8-729-100-66	TRANSISTOR 2SC1623				
Q024	8-729-100-66	TRANSISTOR 2SC1623				
		RESISTOR				
R003	1-216-109-00	METAL CHIP	330K	5%	1/10W	
R004	1-216-020-00	METAL CHIP	62	5%	1/10W	
R005	1-216-113-00	METAL CHIP	470K	5%	1/10W	
R006	1-216-089-00	METAL CHIP	47K	5%	1/10W	
R007	1-216-089-00	METAL CHIP	47K	5%	1/10W	
R008	1-216-073-00	METAL CHIP	10K	5%	1/10W	
R009	1-216-089-00	METAL CHIP	47K	5%	1/10W	
R010	1-216-089-00	METAL CHIP	47K	5%	1/10W	
R011	1-216-089-00	METAL CHIP	47K	5%	1/10W	
R012	1-216-073-00	METAL CHIP	10K	5%	1/10W	
R013	1-216-073-00	METAL CHIP	10K	5%	1/10W	
R014	1-216-089-00	METAL CHIP	47K	5%	1/10W	
R015	1-216-089-00	METAL CHIP	47K	5%	1/10W	
R016	1-216-089-00	METAL CHIP	47K	5%	1/10W	
R017	1-216-081-00	METAL CHIP	22K	5%	1/10W	
R018	1-216-081-00	METAL CHIP	22K	5%	1/10W	
R019	1-216-097-00	METAL CHIP	100K	5%	1/10W	
R020	1-216-073-00	METAL CHIP	10K	5%	1/10W	
R021	1-216-097-00	METAL CHIP	100K	5%	1/10W	
R022	1-216-073-00	METAL CHIP	10K	5%	1/10W	
R023	1-216-097-00	METAL CHIP	100K	5%	1/10W	
R024	1-216-073-00	METAL CHIP	10K	5%	1/10W	
R025	1-216-097-00	METAL CHIP	100K	5%	1/10W	
R026	1-216-049-00	METAL CHIP	1K	5%	1/10W	
R027	1-216-097-00	METAL CHIP	100K	5%	1/10W	
R028	1-216-097-00	METAL CHIP	100K	5%	1/10W	
R029	1-216-073-00	METAL CHIP	10K	5%	1/10W	
R030	1-216-089-00	METAL CHIP	47K	5%	1/10W	
R031	1-216-089-00	METAL CHIP	47K	5%	1/10W	
R032	1-216-089-00	METAL CHIP	47K	5%	1/10W	
R033	1-216-089-00	METAL CHIP	47K	5%	1/10W	
R034	1-216-089-00	METAL CHIP	47K	5%	1/10W	
R035	1-216-097-00	METAL CHIP	100K	5%	1/10W	
R036	1-216-089-00	METAL CHIP	47K	5%	1/10W	
R037	1-216-089-00	METAL CHIP	47K	5%	1/10W	
R038	1-216-089-00	METAL CHIP	47K	5%	1/10W	
R039	1-216-089-00	METAL CHIP	47K	5%	1/10W	

Ref.No	Part No.	Description				Remark
R040	1-216-089-00	METAL CHIP	47K	5%	1/10W	
R041	1-216-073-00	METAL CHIP	10K	5%	1/10W	
R042	1-216-073-00	METAL CHIP	10K	5%	1/10W	
R043	1-216-073-00	METAL CHIP	10K	5%	1/10W	
R044	1-216-097-00	METAL CHIP	100K	5%	1/10W	
R045	1-216-089-00	METAL CHIP	47K	5%	1/10W	
R047	1-216-073-00	METAL CHIP	10K	5%	1/10W	
R048	1-216-089-00	METAL CHIP	47K	5%	1/10W	
R049	1-216-097-00	METAL CHIP	100K	5%	1/10W	
R050	1-216-097-00	METAL CHIP	100K	5%	1/10W	
R051	1-216-073-00	METAL CHIP	10K	5%	1/10W	
R052	1-216-073-00	METAL CHIP	10K	5%	1/10W	
R053	1-216-073-00	METAL CHIP	10K	5%	1/10W	
R054	1-216-065-00	METAL CHIP	4.7K	5%	1/10W	
R055	1-216-089-00	METAL CHIP	47K	5%	1/10W	
R056	1-216-097-00	METAL CHIP	100K	5%	1/10W	
R057	1-216-089-00	METAL CHIP	47K	5%	1/10W	
R058	1-216-097-00	METAL CHIP	100K	5%	1/10W	
R059	1-216-065-00	METAL CHIP	4.7K	5%	1/10W	
R060	1-216-097-00	METAL CHIP	100K	5%	1/10W	
R061	1-216-065-00	METAL CHIP	4.7K	5%	1/10W	
R062	1-216-081-00	METAL CHIP	22K	5%	1/10W	
R063	1-216-089-00	METAL CHIP	47K	5%	1/10W	
R064	1-216-121-00	METAL CHIP	1M	5%	1/10W	
R065	1-216-121-00	METAL CHIP	1M	5%	1/10W	
R067	1-216-089-00	METAL CHIP	47K	5%	1/10W	
R068	1-216-097-00	METAL CHIP	100K	5%	1/10W	
R069	1-216-089-00	METAL CHIP	47K	5%	1/10W	
R070	1-216-097-00	METAL CHIP	100K	5%	1/10W	
R071	1-216-089-00	METAL CHIP	47K	5%	1/10W	
R072	1-216-089-00	METAL CHIP	47K	5%	1/10W	
R073	1-216-089-00	METAL CHIP	47K	5%	1/10W	
R074	1-216-085-00	METAL CHIP	33K	5%	1/10W	
R075	1-216-089-00	METAL CHIP	47K	5%	1/10W	
R076	1-216-089-00	METAL CHIP	47K	5%	1/10W	
R077	1-216-073-00	METAL CHIP	10K	5%	1/10W	
R078	1-216-097-00	METAL CHIP	100K	5%	1/10W	
R080	1-215-445-00	METAL	10K	1%	1/6W	
R081	1-215-445-00	METAL	10K	1%	1/6W	
R082	1-216-073-00	METAL CHIP	10K	5%	1/10W	
R083	1-216-089-00	METAL CHIP	47K	5%	1/10W	
R084	1-216-089-00	METAL CHIP	47K	5%	1/10W	
R086	1-216-065-00	METAL CHIP	4.7K	5%	1/10W	
R087	1-216-065-00	METAL CHIP	4.7K	5%	1/10W	
R088	1-216-065-00	METAL CHIP	4.7K	5%	1/10W	
R089	1-216-049-00	METAL CHIP	1K	5%	1/10W	
R090	1-216-089-00	METAL CHIP	47K	5%	1/10W	
R091	1-216-065-00	METAL CHIP	4.7K	5%	1/10W	
R092	1-216-073-00	METAL CHIP	10K	5%	1/10W	
R093	1-216-089-00	METAL CHIP	47K	5%	1/10W	
R094	1-216-097-00	METAL CHIP	100K	5%	1/10W	
R095	1-216-097-00	METAL CHIP	100K	5%	1/10W	
R096	1-216-046-00	METAL CHIP	750	5%	1/10W	

When indicating parts by reference number, please include the board name.

Ref.No	Part No.	Description				Remark
R097	1-216-073-00	METAL CHIP	10K	5%	1/10W	
R098	1-216-073-00	METAL CHIP	10K	5%	1/10W	
R099	1-216-073-00	METAL CHIP	10K	5%	1/10W	
R100	1-216-073-00	METAL CHIP	10K	5%	1/10W	
R101	1-216-073-00	METAL CHIP	10K	5%	1/10W	
R102	1-216-065-00	METAL CHIP	4.7K	5%	1/10W	
R105	1-247-831-00	CARBON	1K	5%	1/6W	
R106	1-247-831-00	CARBON	1K	5%	1/6W	
		SWITCH				
SW001	1-554-371-00	SWITCH, TACT				
SW002	1-554-371-00	SWITCH, TACT				
SW003	1-554-371-00	SWITCH, TACT				
SW005	1-554-364-00	SWITCH, SLIDE				
SW006	1-554-371-00	SWITCH, TACT				
SW007	1-554-371-00	SWITCH, TACT				
SW008	1-554-371-00	SWITCH, TACT				
SW009	1-554-371-00	SWITCH, TACT				
SW012	1-554-371-00	SWITCH, TACT				
SW014	1-554-371-00	SWITCH, TACT				
SW015	1-553-977-00	SWITCH, SLIDE				
SW016	1-553-977-00	SWITCH, SLIDE				
		VARIABLE RESISTOR				
VR001	1-228-939-00	RES, VAR, CARBON 100K				
		CRYSTAL				
X001	1-527-532-31	OSCILLATOR, CERAMIC				

****

*A-6724-401- OM-1 BOARD, COMPLETE
****

*3-686-114-01 HOLDER, CONNECTOR

		CAPACITOR			
C001	1-101-888-00	CERAMIC	68PF	5%	50V
C002	1-102-116-00	CERAMIC	680PF	10%	50V
C003	1-123-611-00	ELECT	1MF	20%	50V
C004	1-124-168-00	ELECT	100MF	20%	16V
C005	1-123-326-00	ELECT	3300MF	20%	16V
		CONNECTOR			
CN001	*1-560-466-00	PIN, CONNECTOR 3P			
CN002	*1-560-468-00	PIN, CONNECTOR 5P			
CN003	*1-560-456-00	PIN, CONNECTOR 2P			

Ref.No	Part No.	Description	Remark
CN004	1-507-800-00	JACK	
CN005	1-561-827-00	SOCKET, DIN 8P	
CN006	*1-560-456-00	PIN, CONNECTOR 2P	
CN007	*1-560-456-00	PIN, CONNECTOR 2P	
		DIODE	
D001	8-719-156-07	DIODE RD5.6E-B	
D002 ⚠	.8-719-168-07	DIODE RD5.6E-B	
D003 ⚠	.8-719-200-02	DIODE 10E-2	
D004	8-719-156-07	DIODE RD5.6E-B	
D005	8-719-156-07	DIODE RD5.6E-B	
D006	8-719-156-07	DIODE RD5.6E-B	
D007	8-719-156-07	DIODE RD5.6E-B	
D008	8-719-156-07	DIODE RD5.6E-B	
D009	8-719-156-07	DIODE RD5.6E-B	
D010	8-719-156-07	DIODE RD5.6E-B	
D011	8-719-156-07	DIODE RD5.6E-B	
D012	8-719-156-07	DIODE RD5.6E-B	
		IC	
IC001	8-759-100-42	IC UPD652C-035	
		TRANSISTOR	
Q001	8-729-177-32	TRANSISTOR 2SD773	
Q002	8-729-255-12	TRANSISTOR 2SC2551	
Q003	8-729-255-12	TRANSISTOR 2SC2551	
Q004	8-729-255-12	TRANSISTOR 2SC2551	
Q005	8-729-255-12	TRANSISTOR 2SC2551	
Q006	8-729-255-12	TRANSISTOR 2SC2551	
Q007	8-729-255-12	TRANSISTOR 2SC2551	
Q008	8-729-178-62	TRANSISTOR 2SC2786	
Q009	8-729-612-77	TRANSISTOR 2SA1027R	
Q010	8-729-178-62	TRANSISTOR 2SC2786	
Q011	8-729-255-12	TRANSISTOR 2SC2551	
		RESISTOR	
R001	1-247-895-00	CARBON 470K 5% 1/6W	
R002	1-247-871-00	CARBON 47K 5% 1/6W	
R003	1-247-871-00	CARBON 47K 5% 1/6W	
R004	1-247-879-00	CARBON 100K 5% 1/6W	
R005	1-247-871-00	CARBON 47K 5% 1/6W	
R006	1-247-871-00	CARBON 47K 5% 1/6W	
R007	1-247-871-00	CARBON 47K 5% 1/6W	
R008	1-247-871-00	CARBON 47K 5% 1/6W	
R009	1-247-872-00	CARBON 51K 5% 1/6W	
R010	1-247-875-00	CARBON 68K 5% 1/6W	
R011	1-247-855-00	CARBON 10K 5% 1/6W	
R012	1-247-855-00	CARBON 10K 5% 1/6W	
R013	1-247-855-00	CARBON 10K 5% 1/6W	
R014	1-247-855-00	CARBON 10K 5% 1/6W	
R015	1-247-855-00	CARBON 10K 5% 1/6W	
R016	1-247-855-00	CARBON 10K 5% 1/6W	

The components identified by shading and mark ⚠ are critical for safety. Replace only with part number specified.

When indicating parts by reference number, please include the board name.

Ref.No	Part No.	Description				Remark
R017	1-247-855-00	CARBON	10K	5%	1/6W	
R018	1-247-845-00	CARBON	3.9K	5%	1/6W	
R019	1-247-843-00	CARBON	3.3K	5%	1/6W	
R020	1-247-847-00	CARBON	4.7K	5%	1/6W	
R021	1-247-835-00	CARBON	1.5K	5%	1/6W	
R022	1-247-831-00	CARBON	1K	5%	1/6W	
R023	1-247-831-00	CARBON	1K	5%	1/6W	
R024	1-247-831-00	CARBON	1K	5%	1/6W	
R025	1-247-843-00	CARBON	3.3K	5%	1/6W	
R026	1-246-481-00	CARBON	2.2K	5%	1/4W	
R026	1-247-845-00	CARBON	3.9K	5%	1/6W	
R027	1-247-847-00	CARBON	4.7K	5%	1/6W	
		CRYSTAL				
X001	1-527-532-31	OSCILLATOR, CERAMIC				
**********						
	*1-609-071-00	LM-11 BOARD				
		**********				
		CAPACITOR				
C001	1-161-054-00	CERAMIC	0.018MF	10%	50V	
		COIL				
L001	1-408-120-00	MICRO INDUCTOR 18UH				
L002	1-408-120-00	MICRO INDUCTOR 18UH				
**********						

Ref.No	Part No.	Description			Remark
	*A-6710-393-B	YF-1 BOARD, COMPLETE			
		**********			
		CAPACITOR			
C001	1-163-021-00	CERAMIC CHIP 0.01MF	10%	50V	
C002	1-163-104-00	CERAMIC CHIP 30PF	5%	50V	
C003	1-163-104-00	CERAMIC CHIP 30PF	5%	50V	
C004	1-163-035-00	CERAMIC CHIP 0.047MF		50V	
C005	1-163-093-00	CERAMIC CHIP 10PF	5%	50V	
C006	1-163-035-00	CERAMIC CHIP 0.047MF		50V	
C007	1-163-035-00	CERAMIC CHIP 0.047MF		50V	
C008	1-163-107-00	CERAMIC CHIP 39PF	5%	50V	
C009	1-163-113-00	CERAMIC CHIP 68PF	5%	50V	
C010	1-163-112-00	CERAMIC CHIP 62PF	5%	50V	
C011	1-163-121-00	CERAMIC CHIP 150PF	5%	50V	
C012	1-163-021-00	CERAMIC CHIP 0.01MF	10%	50V	
C013	1-163-129-00	CERAMIC CHIP 330PF	5%	50V	
C014	1-163-096-00	CERAMIC CHIP 13PF	5%	50V	
C015	1-163-129-00	CERAMIC CHIP 330PF	5%	50V	
C016	1-163-023-00	CERAMIC CHIP 0.015MF	10%	50V	
C017	1-163-085-00	CERAMIC CHIP 2PF	0.25PF	50V	
C018	1-163-010-00	CERAMIC CHIP 0.0012MF	10%	50V	
C019	1-163-035-00	CERAMIC CHIP 0.047MF		50V	
C026	1-135-062-00	TANTAL. CHIP 4.7MF	20%	10V	
C027	1-135-056-00	TANTAL. CHIP 2.2MF	20%	20V	
C029	1-163-129-00	CERAMIC CHIP 330PF	5%	50V	
C030	1-163-035-00	CERAMIC CHIP 0.047MF		50V	
C031	1-163-107-00	CERAMIC CHIP 39PF	5%	50V	
		DIODE			
D002	8-719-100-03	DIODE 1S2835			
D003	8-719-100-05	DIODE 1S2837			
D004	8-719-100-05	DIODE 1S2837			
		IC			
IC001	8-759-600-49	IC CX20004			
		COIL			
L001	1-408-829-00	INDUCTOR CHIP 15UH			
L002	1-408-758-00	INDUCTOR CHIP 330UH			
L003	1-408-832-00	INDUCTOR CHIP 27UH			
L004	1-408-836-00	INDUCTOR CHIP 56UH			
L005	1-408-837-00	INDUCTOR CHIP 68UH			
L009	1-408-744-00	INDUCTOR CHIP 22UH			
		TRANSISTOR			
Q001	8-729-100-66	TRANSISTOR 2SC1623			
Q002	8-729-100-66	TRANSISTOR 2SC1623			
Q003	8-729-100-66	TRANSISTOR 2SC1623			
Q004	8-729-100-66	TRANSISTOR 2SC1623			
Q005	8-729-100-66	TRANSISTOR 2SC1623			
Q006	8-729-100-66	TRANSISTOR 2SC1623			

When indicating parts by reference number, please include the board name.

YF-1 YM-1

Ref.No	Part No.	Description			Remark
Q010	8-729-100-66	TRANSISTOR 2SC1623			
		RESISTOR			
R002	1-216-080-00	METAL CHIP	20K	5% 1/10W	
R003	1-216-073-00	METAL CHIP	10K	5% 1/10W	
R004	1-216-053-00	METAL CHIP	1.5K	5% 1/10W	
R005	1-216-050-00	METAL CHIP	1.1K	5% 1/10W	
R006	1-216-050-00	METAL CHIP	1.1K	5% 1/10W	
R007	1-216-097-00	METAL CHIP	100K	5% 1/10W	
R008	1-216-073-00	METAL CHIP	10K	5% 1/10W	
R009	1-216-089-00	METAL CHIP	47K	5% 1/10W	
R010	1-216-073-00	METAL CHIP	10K	5% 1/10W	
R011	1-216-081-00	METAL CHIP	22K	5% 1/10W	
R012	1-216-067-00	METAL CHIP	5.6K	5% 1/10W	
R013	1-216-049-00	METAL CHIP	1K	5% 1/10W	
R014	1-216-103-00	METAL CHIP	180K	5% 1/10W	
R015	1-216-063-00	METAL CHIP	3.9K	5% 1/10W	
R016	1-216-079-00	METAL CHIP	18K	5% 1/10W	
R017	1-216-049-00	METAL CHIP	1K	5% 1/10W	
R018	1-216-086-00	METAL CHIP	36K	5% 1/10W	
R019	1-216-071-00	METAL CHIP	8.2K	5% 1/10W	
R020	1-216-064-00	METAL CHIP	4.3K	5% 1/10W	
R021	1-216-041-00	METAL CHIP	470	5% 1/10W	
R022	1-216-065-00	METAL CHIP	4.7K	5% 1/10W	
R023	1-216-101-00	METAL CHIP	150K	5% 1/10W	
R024	1-216-085-00	METAL CHIP	33K	5% 1/10W	
R025	1-216-087-00	METAL CHIP	39K	5% 1/10W	
R026	1-216-087-00	METAL CHIP	39K	5% 1/10W	
R027	1-216-055-00	METAL CHIP	1.8K	5% 1/10W	
R028	1-216-055-00	METAL CHIP	1.8K	5% 1/10W	
R029	1-216-040-00	METAL CHIP	430	5% 1/10W	
R038	1-216-060-00	METAL CHIP	3K	5% 1/10W	
R039	1-216-057-00	METAL CHIP	2.2K	5% 1/10W	
R041	1-216-295-00	METAL CHIP	0	5% 1/10W	
		VARIABLE RESISTOR			
RV001	1-228-828-00	RES, METAL GLAZE 4.7K			
**********					
	*A-6710-394-A	YM-1 BOARD, COMPLETE			
		**********			
		CAPACITOR			
C002	1-135-058-00	TANTAL. CHIP 1MF		20% 16V	
C003	1-163-124-00	CERAMIC CHIP 200PF		5% 50V	
C004	1-163-129-00	CERAMIC CHIP 330PF		5% 50V	
C007	1-163-134-00	CERAMIC CHIP 510PF		5% 50V	
C008	1-163-075-00	CERAMIC CHIP 0.047MF		10% 25V	
C009	1-163-141-00	CERAMIC CHIP 0.001MF		5% 50V	
C010	1-163-129-00	CERAMIC CHIP 330PF		5% 50V	
C011	1-163-141-00	CERAMIC CHIP 0.001MF		5% 50V	
C012	1-163-121-00	CERAMIC CHIP 150PF		5% 50V	
C014	1-163-075-00	CERAMIC CHIP 0.047MF		50V	
C018	1-163-111-00	CERAMIC CHIP 56PF	5%	50V	
C019	1-163-105-00	CERAMIC CHIP 33PF	5%	50V	
C021	1-135-058-00	TANTAL. CHIP 1MF	20%	16V	
C025	1-163-075-00	CERAMIC CHIP 0.047MF		50V	
C027	1-163-021-00	CERAMIC CHIP 0.01MF	10%	50V	
C028	1-163-021-00	CERAMIC CHIP 0.01MF	10%	50V	
C029	1-135-052-00	TANTAL. CHIP 0.47MF	20%	25V	
C030	1-135-062-00	TANTAL. CHIP 4.7MF	20%	10V	
C031	1-163-117-00	CERAMIC CHIP 100PF	5%	50V	
C032	1-163-021-00	CERAMIC CHIP 0.01MF	10%	50V	
C033	1-163-116-00	CERAMIC CHIP 91PF	5%	50V	
C034	1-135-058-00	TANTAL. CHIP 1MF	20%	16V	
C035	1-163-021-00	CERAMIC CHIP 0.01MF	10%	50V	
C036	1-163-123-00	CERAMIC CHIP 180PF	5%	50V	
C038	1-163-021-00	CERAMIC CHIP 0.01MF	10%	50V	
C039	1-163-137-00	CERAMIC CHIP 680PF	5%	50V	
C040	1-135-058-00	TANTAL. CHIP 1MF	20%	16V	
C041	1-163-137-00	CERAMIC CHIP 680PF	5%	50V	
C043	1-135-059-00	TANTAL. CHIP 3.3MF	20%	16V	
C044	1-163-109-00	CERAMIC CHIP 47PF	5%	50V	
C045	1-135-059-00	TANTAL. CHIP 3.3MF	20%	16V	
C046	1-135-056-00	TANTAL. CHIP 2.2MF	20%	20V	
C047	1-163-075-00	CERAMIC CHIP 0.047MF	10%	25V	
C048	1-163-093-00	CERAMIC CHIP 10PF	5%	50V	
C049	1-135-059-00	TANTAL. CHIP 3.3MF	20%	16V	
C050	1-163-077-00	CERAMIC CHIP 0.1MF		50V	
C051	1-135-059-00	TANTAL. CHIP 3.3MF	20%	16V	
C052	1-135-059-00	TANTAL. CHIP 3.3MF	20%	16V	
C053	1-163-141-00	CERAMIC CHIP 0.001MF	5%	50V	
		DIODE			
D001	8-719-100-05	DIODE 1S2837			
D002	8-719-100-05	DIODE 1S2837			
D003	8-719-100-05	DIODE 1S2837			
D004	8-719-106-44	DIODE RD9.1M-B2			
D005	8-719-106-44	DIODE RD9.1M-B2			
		IC			
IC001	8-759-201-39	IC CX-897			
IC002	8-759-906-33	IC CX-898			
IC003	8-759-201-28	IC CX10044			
		COIL			
L001	1-408-749-00	INDUCTOR CHIP 56UH			
L003	1-408-860-00	COIL, CHOKE			
		TRANSISTOR			
Q001	8-729-100-66	TRANSISTOR 2SC1623			
Q002	8-729-100-66	TRANSISTOR 2SC1623			
Q003	8-729-100-66	TRANSISTOR 2SC1623			

When indicating parts by reference number, please include the board name.

Ref.No	Part No.	Description			Remark
		RESISTOR			
R001	1-216-091-00	METAL CHIP	56K	5% 1/10W	
R002	1-216-093-00	METAL CHIP	68K	5% 1/10W	
R003	1-216-065-00	METAL CHIP	4.7K	5% 1/10W	
R004	1-216-081-00	METAL CHIP	22K	5% 1/10W	
R005	1-216-101-00	METAL CHIP	150K	5% 1/10W	
R006	1-216-097-00	METAL CHIP	100K	5% 1/10W	
R007	1-216-057-00	METAL CHIP	2.2K	5% 1/10W	
R008	1-216-049-00	METAL CHIP	1K	5% 1/10W	
R009	1-216-111-00	METAL CHIP	390K	5% 1/10W	
R010	1-216-113-00	METAL CHIP	470K	5% 1/10W	
R011	1-216-075-00	METAL CHIP	12K	5% 1/10W	
R012	1-216-056-00	METAL CHIP	2K	5% 1/10W	
R013	1-216-079-00	METAL CHIP	18K	5% 1/10W	
R014	1-216-088-00	METAL CHIP	43K	5% 1/10W	
R015	1-216-047-00	METAL CHIP	820	5% 1/10W	
R016	1-216-073-00	METAL CHIP	10K	5% 1/10W	
R017	1-216-050-00	METAL CHIP	1.1K	5% 1/10W	
R018	1-216-049-00	METAL CHIP	1K	5% 1/10W	
R019	1-216-025-00	METAL CHIP	100	5% 1/10W	
R022	1-216-070-00	METAL CHIP	7.5K	5% 1/10W	
R023	1-216-100-00	METAL CHIP	130K	5% 1/10W	
R024	1-216-104-00	METAL CHIP	200K	5% 1/10W	
R025	1-216-053-00	METAL CHIP	1.5K	5% 1/10W	
R026	1-216-070-00	METAL CHIP	7.5K	5% 1/10W	
R027	1-216-060-00	METAL CHIP	3K	5% 1/10W	
R028	1-216-059-00	METAL CHIP	2.7K	5% 1/10W	
R029	1-216-035-00	METAL CHIP	270	5% 1/10W	
R030	1-216-053-00	METAL CHIP	1.5K	5% 1/10W	
R031	1-216-061-00	METAL CHIP	3.3K	5% 1/10W	
R035	1-216-077-00	METAL CHIP	15K	5% 1/10W	
R036	1-216-049-00	METAL CHIP	1K	5% 1/10W	
R039	1-216-061-00	METAL CHIP	3.3K	5% 1/10W	
R040	1-216-090-00	METAL CHIP	51K	5% 1/10W	
R041	1-216-086-00	METAL CHIP	36K	5% 1/10W	
R042	1-216-043-00	METAL CHIP	560	5% 1/10W	
R043	1-216-092-00	METAL CHIP	62K	5% 1/10W	
R044	1-216-043-00	METAL CHIP	560	5% 1/10W	
R045	1-216-087-00	METAL CHIP	39K	5% 1/10W	
		VARIABLE RESISTOR			
RV001	1-228-832-00	RES, METAL GLAZE 47K			
RV002	1-228-827-00	RES, ADJ, METAL GLAZE 2.2K			
RV003	1-228-832-00	RES, METAL GLAZE 47K			

****

*A-6710-395-A YS-1 BOARD, COMPLETE

****

		CAPACITOR			
C001	1-163-059-00	CERAMIC CHIP 0.01MF	10%	50V	
C002	1-163-134-00	CERAMIC CHIP 510PF	5%	50V	
C003	1-163-101-00	CERAMIC CHIP 22PF	5%	50V	
C004	1-163-117-00	CERAMIC CHIP 100PF	5%	50V	
C005	1-163-111-00	CERAMIC CHIP 56PF	5%	50V	
C006	1-163-097-00	CERAMIC CHIP 15PF	5%	50V	
C007	1-163-119-00	CERAMIC CHIP 120PF	5%	50V	
C008	1-163-059-00	CERAMIC CHIP 0.01MF	10%	50V	
C009	1-163-021-00	CERAMIC CHIP 0.01MF	10%	50V	
C010	1-163-109-00	CERAMIC CHIP 47PF	5%	50V	
C011	1-163-099-00	CERAMIC CHIP 18PF	5%	50V	
C012	1-163-113-00	CERAMIC CHIP 68PF	5%	50V	
C013	1-163-105-00	CERAMIC CHIP 33PF	5%	50V	
C014	1-163-113-00	CERAMIC CHIP 68PF	5%	50V	
C017	1-163-205-00	CERAMIC CHIP 0.001MF	5%	50V	
C018	1-163-059-00	CERAMIC CHIP 0.01MF	10%	50V	
C019	1-163-059-00	CERAMIC CHIP 0.01MF	10%	50V	
C020	1-163-134-00	CERAMIC CHIP 510PF	5%	50V	
C021	1-135-062-00	TANTAL. CHIP 4.7MF	20%	10V	
C022	1-163-205-00	CERAMIC CHIP 0.001MF	5%	50V	
C023	1-163-113-00	CERAMIC CHIP 68PF	5%	50V	
C024	1-163-075-00	CERAMIC CHIP 0.047MF		50V	
C025	1-163-104-00	CERAMIC CHIP 30PF	5%	50V	
C026	1-163-086-00	CERAMIC CHIP 3PF	0.25PF	50V	
C027	1-163-059-00	CERAMIC CHIP 0.01MF	10%	50V	
C028	1-135-062-00	TANTAL. CHIP 4.7MF	20%	10V	
C029	1-163-033-00	CERAMIC CHIP 0.022MF	10%	25V	
C030	1-163-093-00	CERAMIC CHIP 10PF	5%	50V	
C031	1-135-058-00	TANTAL. CHIP 1MF	20%	16V	
C032	1-135-058-00	TANTAL. CHIP 1MF	20%	16V	
C034	1-163-115-00	CERAMIC CHIP 82PF	5%	50V	
C035	1-135-062-00	TANTAL. CHIP 4.7MF	20%	10V	
C036	1-135-062-00	TANTAL. CHIP 4.7MF	20%	10V	
C037	1-135-062-00	TANTAL. CHIP 4.7MF	20%	10V	
C039	1-135-062-00	TANTAL. CHIP 4.7MF	20%	10V	
C040	1-135-062-00	TANTAL. CHIP 4.7MF	20%	10V	
C043	1-135-062-00	TANTAL. CHIP 4.7MF	20%	10V	
C045	1-163-205-00	CERAMIC CHIP 0.001MF	5%	50V	
C047	1-135-096-21	TANTAL. CHIP 4.7MF	20%	10V	
		DIODE			
D001	8-719-100-03	DIODE 1S2835			
		IC			
IC001	8-759-600-51	IC CX20005			
IC002	8-752-000-62	IC CX20006A			
		COIL			
L001	1-408-892-00	INDUCTOR CHIP 1.5UH			
L002	1-408-748-00	INDUCTOR CHIP 47UH			
L003	1-408-750-00	INDUCTOR CHIP 68UH			
L004	1-408-749-00	INDUCTOR CHIP 56UH			
L005	1-408-754-00	INDUCTOR CHIP 150UH			
L006	1-408-892-00	INDUCTOR CHIP 1.5UH			

When indicating parts by reference number, please include the board name.

VIDEO PARTS LIST

YS-1 **PE-3**

Ref.No	Part No.	Description			Remark
		TRANSISTOR			
Q001	8-729-100-66	TRANSISTOR 2SC1623			
		RESISTOR			
R001	1-216-071-00	METAL CHIP	8.2K	5%	1/10W
R002	1-216-066-00	METAL CHIP	5.1K	5%	1/10W
R003	1-216-073-00	METAL CHIP	10K	5%	1/10W
R004	1-216-061-00	METAL CHIP	3.3K	5%	1/10W
R005	1-216-073-00	METAL CHIP	10K	5%	1/10W
R006	1-216-051-00	METAL CHIP	1.2K	5%	1/10W
R007	1-216-057-00	METAL CHIP	2.2K	5%	1/10W
R008	1-216-065-00	METAL CHIP	4.7K	5%	1/10W
R009	1-216-049-00	METAL CHIP	1K	5%	1/10W
R010	1-216-043-00	METAL CHIP	560	5%	1/10W
R011	1-216-065-00	METAL CHIP	4.7K	5%	1/10W
R012	1-216-043-00	METAL CHIP	560	5%	1/10W
R013	1-216-043-00	METAL CHIP	560	5%	1/10W
R014	1-216-065-00	METAL CHIP	4.7K	5%	1/10W
R015	1-216-065-00	METAL CHIP	4.7K	5%	1/10W
R016	1-216-049-00	METAL CHIP	1K	5%	1/10W
R017	1-216-031-00	METAL CHIP	180	5%	1/10W
R019	1-216-084-00	METAL CHIP	30K	5%	1/10W
R020	1-216-089-00	METAL CHIP	47K	5%	1/10W
R021	1-216-049-00	METAL CHIP	1K	5%	1/10W
R022	1-216-050-00	METAL CHIP	1.1K	5%	1/10W
R023	1-216-050-00	METAL CHIP	1.1K	5%	1/10W
R024	1-216-067-00	METAL CHIP	5.6K	5%	1/10W
R025	1-216-186-00	METAL CHIP	330	5%	1/8W
R026	1-216-064-00	METAL CHIP	4.3K	5%	1/10W
R027	1-216-042-00	METAL CHIP	510	5%	1/10W
R028	1-216-025-00	METAL CHIP	100	5%	1/10W
R029	1-216-099-00	METAL CHIP	120K	5%	1/10W
R031	1-216-030-00	METAL CHIP	160	5%	1/10W
R033	1-216-027-00	METAL CHIP	120	5%	1/10W
		VARIABLE RESISTOR			
RV001	1-228-825-00	RES, ADJ, METAL GLAZE 470			
RV002	1-228-828-00	RES, METAL GLAZE 4.7K			

****

*A-6710-396-A PE-3 BOARD, COMPLETE
****

	CAPACITOR			
C001	1-163-021-00	CERAMIC CHIP 0.01MF	10%	50V
C002	1-163-137-00	CERAMIC CHIP 680PF	5%	50V
C003	1-163-123-00	CERAMIC CHIP 180PF	5%	50V
C004	1-135-056-00	TANTAL. CHIP 2.2MF	20%	20V
C005	1-163-137-00	CERAMIC CHIP 680PF	5%	50V
C006	1-163-121-00	CERAMIC CHIP 150PF	5%	50V
C007	1-163-118-00	CERAMIC CHIP 110PF	5%	50V
C008	1-163-129-00	CERAMIC CHIP 330PF	5%	50V
C009	1-135-088-21	TANTAL. CHIP 2.2MF	20%	20V
C010	1-135-062-00	TANTAL. CHIP 4.7MF	20%	10V
C011	1-163-115-00	CERAMIC CHIP 82PF	5%	50V
		DIODE		
D001	8-719-101-23	DIODE 1SS123		
D002	8-719-101-23	DIODE 1SS123		
D003	8-719-101-23	DIODE 1SS123		
D004	8-719-100-03	DIODE 1S2835		
D005	8-719-101-23	DIODE 1SS123		
D006	8-719-100-05	DIODE 1S2837		
		COIL		
L001	1-408-783-00	INDUCTOR CHIP 33UH		
		TRANSISTOR		
Q001	8-729-312-22	TRANSISTOR 2SA1122		
Q002	8-729-312-22	TRANSISTOR 2SA1122		
Q003	8-729-312-22	TRANSISTOR 2SA1122		
Q004	8-729-100-66	TRANSISTOR 2SC1623		
Q005	8-729-312-22	TRANSISTOR 2SA1122		
Q006	8-729-312-22	TRANSISTOR 2SA1122		
Q007	8-729-100-66	TRANSISTOR 2SC1623		
Q008	8-729-100-76	TRANSISTOR 2SA812		
Q009	8-729-312-22	TRANSISTOR 2SA1122		
Q010	8-729-312-22	TRANSISTOR 2SA1122		
		RESISTOR		
R001	1-216-061-00	METAL CHIP	3.3K	5% 1/10W
R002	1-216-040-00	METAL CHIP	430	5% 1/10W
R003	1-216-051-00	METAL CHIP	1.2K	5% 1/10W
R004	1-216-051-00	METAL CHIP	1.2K	5% 1/10W
R005	1-216-069-00	METAL CHIP	6.8K	5% 1/10W
R006	1-216-073-00	METAL CHIP	10K	5% 1/10W
R007	1-216-017-00	METAL CHIP	47	5% 1/10W
R008	1-216-081-00	METAL CHIP	22K	5% 1/10W
R009	1-216-053-00	METAL CHIP	1.5K	5% 1/10W
R011	1-216-043-00	METAL CHIP	560	5% 1/10W
R012	1-216-042-00	METAL CHIP	510	5% 1/10W
R013	1-216-057-00	METAL CHIP	2.2K	5% 1/10W
R014	1-216-039-00	METAL CHIP	390	5% 1/10W
R015	1-216-056-00	METAL CHIP	2K	5% 1/10W
R016	1-216-031-00	METAL CHIP	180	5% 1/10W
R017	1-216-085-00	METAL CHIP	33K	5% 1/10W
R018	1-216-085-00	METAL CHIP	33K	5% 1/10W
R019	1-216-031-00	METAL CHIP	180	5% 1/10W
R020	1-216-042-00	METAL CHIP	510	5% 1/10W
R021	1-216-049-00	METAL CHIP	1K	5% 1/10W
R022	1-216-069-00	METAL CHIP	6.8K	5% 1/10W
R023	1-216-069-00	METAL CHIP	6.8K	5% 1/10W
R024	1-216-049-00	METAL CHIP	1K	5% 1/10W
R025	1-216-044-00	METAL CHIP	620	5% 1/10W
R026	1-216-071-00	METAL CHIP	8.2K	5% 1/10W

When indicating parts by reference number, please include the board name.

Ref.No	Part No.	Description				Remark
R027	1-216-075-00	METAL CHIP	12K	5%	1/10W	
R028	1-216-049-00	METAL CHIP	1K	5%	1/10W	
R029	1-216-085-00	METAL CHIP	33K	5%	1/10W	
R030	1-216-087-00	METAL CHIP	39K	5%	1/10W	
R031	1-216-057-00	METAL CHIP	2.2K	5%	1/10W	
R032	1-216-050-00	METAL CHIP	1.1K	5%	1/10W	
R033	1-216-075-00	METAL CHIP	12K	5%	1/10W	
R034	1-216-081-00	METAL CHIP	22K	5%	1/10W	

****

*A-6710-397-A DE-2 BOARD, COMPLETE
****

CAPACITOR

C001	1-135-062-00	TANTAL. CHIP	4.7MF	20%	10V
C002	1-163-107-00	CERAMIC CHIP	39PF	5%	50V
C003	1-163-107-00	CERAMIC CHIP	39PF	5%	50V
C004	1-163-099-00	CERAMIC CHIP	18PF	5%	50V
C005	1-163-125-00	CERAMIC CHIP	220PF	5%	50V
C006	1-163-145-00	CERAMIC CHIP	0.0015MF	5%	50V
C007	1-163-131-00	CERAMIC CHIP	390PF	5%	50V
C008	1-163-124-00	CERAMIC CHIP	200PF	5%	50V
C009	1-163-134-00	CERAMIC CHIP	510PF	5%	50V
C010	1-163-132-00	CERAMIC CHIP	430PF	5%	50V
C011	1-163-111-00	CERAMIC CHIP	56PF	5%	50V
C012	1-163-103-00	CERAMIC CHIP	27PF	5%	50V
C013	1-163-121-00	CERAMIC CHIP	150PF	5%	50V
C014	1-163-035-00	CERAMIC CHIP	0.047MF		50V
C015	1-163-021-00	CERAMIC CHIP	0.01MF	10%	50V
C016	1-135-062-00	TANTAL. CHIP	4.7MF	20%	10V
C017	1-163-035-00	CERAMIC CHIP	0.047MF		50V
C018	1-135-062-00	TANTAL. CHIP	4.7MF	20%	10V

DIODE

D001	8-719-101-23	DIODE 1SS123
D002	8-719-101-23	DIODE 1SS123
D003	8-719-100-05	DIODE 1S2837

COIL

L001	1-408-791-00	INDUCTOR CHIP	150UH
L002	1-408-792-00	INDUCTOR CHIP	180UH
L003	1-408-787-00	INDUCTOR CHIP	68UH
L004	1-408-791-00	INDUCTOR CHIP	150UH
L005	1-408-781-00	INDUCTOR CHIP	22UH
L006	1-408-783-00	INDUCTOR CHIP	33UH

TRANSISTOR

Q001	8-729-100-66	TRANSISTOR 2SC1623
Q002	8-729-312-22	TRANSISTOR 2SA1122
Q003	8-729-100-66	TRANSISTOR 2SC1623
Q004	8-729-312-22	TRANSISTOR 2SA1122
Q005	8-729-100-66	TRANSISTOR 2SC1623

Ref.No	Part No.	Description	Remark
Q006	8-729-312-22	TRANSISTOR 2SA1122	
Q007	8-729-100-66	TRANSISTOR 2SC1623	
Q008	8-729-312-22	TRANSISTOR 2SA1122	
Q009	8-729-100-66	TRANSISTOR 2SC1623	

RESISTOR

R001	1-216-087-00	METAL CHIP	39K	5%	1/10W	
R003	1-216-078-00	METAL CHIP	16K	5%	1/10W	
R004	1-216-049-00	METAL CHIP	1K	5%	1/10W	
R005	1-216-057-00	METAL CHIP	2.2K	5%	1/10W	
R006	1-216-049-00	METAL CHIP	1K	5%	1/10W	
R007	1-216-032-00	METAL CHIP	200	5%	1/10W	
R008	1-216-073-00	METAL CHIP	10K	5%	1/10W	
R009	1-216-034-00	METAL CHIP	240	5%	1/10W	
R010	1-216-047-00	METAL CHIP	820	5%	1/10W	
R011	1-216-040-00	METAL CHIP	430	5%	1/10W	
R013	1-216-053-00	METAL CHIP	1.5K	5%	1/10W	
R014	1-216-049-00	METAL CHIP	1K	5%	1/10W	
R016	1-216-001-00	METAL CHIP	10	5%	1/10W	
R017	1-216-075-00	METAL CHIP	12K	5%	1/10W	
R018	1-216-057-00	METAL CHIP	2.2K	5%	1/10W	
R019	1-216-057-00	METAL CHIP	2.2K	5%	1/10W	
R020	1-216-079-00	METAL CHIP	18K	5%	1/10W	
R021	1-216-075-00	METAL CHIP	12K	5%	1/10W	
R022	1-216-081-00	METAL CHIP	22K	5%	1/10W	
R023	1-216-073-00	METAL CHIP	10K	5%	1/10W	
R024	1-216-050-00	METAL CHIP	1.1K	5%	1/10W	
R025	1-216-034-00	METAL CHIP	240	5%	1/10W	
R026	1-216-083-00	METAL CHIP	27K	5%	1/10W	
R027	1-216-085-00	METAL CHIP	33K	5%	1/10W	
R029	1-216-071-00	METAL CHIP	8.2K	5%	1/10W	
R030	1-216-033-00	METAL CHIP	220	5%	1/10W	
R031	1-216-039-00	METAL CHIP	390	5%	1/10W	
R032	1-216-048-00	METAL CHIP	910	5%	1/10W	
R033	1-216-057-00	METAL CHIP	2.2K	5%	1/10W	
R034	1-216-055-00	METAL CHIP	1.8K	5%	1/10W	
R035	1-216-027-00	METAL CHIP	120	5%	1/10W	
R036	1-216-045-00	METAL CHIP	680	5%	1/10W	
R037	1-216-039-00	METAL CHIP	390	5%	1/10W	
R038	1-216-044-00	METAL CHIP	620	5%	1/10W	
R039	1-216-081-00	METAL CHIP	22K	5%	1/10W	
R040	1-216-057-00	METAL CHIP	2.2K	5%	1/10W	
R041	1-216-025-00	METAL CHIP	100	5%	1/10W	
R042	1-216-049-00	METAL CHIP	1K	5%	1/10W	
R045	1-216-296-00	METAL CHIP	0	5%	1/8W	
R046	1-216-296-00	METAL CHIP	0	5%	1/8W	
R047	1-216-296-00	METAL CHIP	0	5%	1/8W	
R048	1-216-296-00	METAL CHIP	0	5%	1/8W	
R049	1-216-296-00	METAL CHIP	0	5%	1/8W	

****

When indicating parts by reference number, please include the board name.

CM-4

Ref.No	Part No.	Description		Remark
	*A-6710-398-C	CM-4 BOARD, COMPLETE **********		
		CAPACITOR		
C001	1-163-021-00	CERAMIC CHIP 0.01MF	10%	50V
C002	1-163-021-00	CERAMIC CHIP 0.01MF	10%	50V
C003	1-163-141-00	CERAMIC CHIP 0.001MF	10%	50V
C004	1-135-059-00	TANTAL. CHIP 3.3MF	10%	16V
C005	1-163-021-00	CERAMIC CHIP 0.01MF	10%	50V
C006	1-163-038-00	CERAMIC CHIP 0.1MF		25V
C007	1-163-021-00	CERAMIC CHIP 0.01MF	10%	50V
C008	1-163-021-00	CERAMIC CHIP 0.01MF	10%	50V
C009	1-163-113-00	CERAMIC CHIP 68PF	5%	50V
C010	1-163-113-00	CERAMIC CHIP 68PF	5%	50V
C011	1-163-125-00	CERAMIC CHIP 220PF	5%	50V
C012	1-135-052-00	TANTAL. CHIP 0.47MF	10%	25V
C013	1-163-021-00	CERAMIC CHIP 0.01MF	10%	50V
C014	1-163-021-00	CERAMIC CHIP 0.01MF	10%	50V
C015	1-163-021-00	CERAMIC CHIP 0.01MF	10%	50V
C016	1-163-021-00	CERAMIC CHIP 0.01MF	10%	50V
C017	1-163-107-00	CERAMIC CHIP 39PF	5%	50V
C018	1-163-021-00	CERAMIC CHIP 0.01MF	10%	50V
C019	1-163-075-00	CERAMIC CHIP 0.047MF	10%	25V
C020	1-163-035-00	CERAMIC CHIP 0.047MF		50V
C021	1-163-021-00	CERAMIC CHIP 0.01MF	10%	50V
C022	1-163-013-00	CERAMIC CHIP 0.0022MF	10%	50V
C023	1-135-059-00	TANTAL. CHIP 3.3MF	10%	16V
C023	1-135-092-21	TANTAL. CHIP 3.3MF	10%	16V
C024	1-163-105-00	CERAMIC CHIP 33PF	5%	50V
C025	1-163-141-00	CERAMIC CHIP 0.001MF	10%	50V
C026	1-163-035-00	CERAMIC CHIP 0.047MF		50V
C027	1-163-237-00	CERAMIC CHIP 27PF	5%	50V
C028	1-163-035-00	CERAMIC CHIP 0.047MF		50V
C029	1-135-062-00	TANTAL. CHIP 4.7MF	10%	10V
C030	1-135-042-00	TANTAL. CHIP 0.1MF	10%	35V
C031	1-163-075-00	CERAMIC CHIP 0.047MF	10%	25V
C032	1-163-035-00	CERAMIC CHIP 0.047MF		50V
C033	1-163-035-00	CERAMIC CHIP 0.047MF		50V
C034	1-163-021-00	CERAMIC CHIP 0.01MF	10%	50V
C035	1-163-141-00	CERAMIC CHIP 0.001MF	10%	50V
C036	1-135-052-00	TANTAL. CHIP 0.47MF	10%	25V
C037	1-135-052-00	TANTAL. CHIP 0.47MF	10%	25V
C038	1-163-114-00	CERAMIC CHIP 75PF	5%	50V
C040	1-163-098-00	CERAMIC CHIP 16PF	5%	50V
C041	1-163-021-00	CERAMIC CHIP 0.01MF	10%	50V
C042	1-163-100-00	CERAMIC CHIP 20PF	5%	50V
C043	1-163-013-00	CERAMIC CHIP 0.0022MF	10%	50V
C044	1-135-058-00	TANTAL. CHIP 1MF	10%	16V
C045	1-163-141-00	CERAMIC CHIP 0.001MF	10%	50V
C046	1-135-058-00	TANTAL. CHIP 1MF	10%	16V
C047	1-163-018-00	CERAMIC CHIP 0.0056MF	10%	50V
C048	1-163-021-00	CERAMIC CHIP 0.01MF	10%	50V
C049	1-135-062-00	TANTAL. CHIP 4.7MF	10%	10V
C050	1-163-021-00	CERAMIC CHIP 0.01MF	10%	50V
C051	1-163-021-00	CERAMIC CHIP 0.01MF	10%	50V
C053	1-163-103-00	CERAMIC CHIP 27PF	5%	50V
C054	1-163-111-00	CERAMIC CHIP 56PF	5%	50V
		FILTER		
CF001	1-231-302-00	CERAMIC FILTER		
CF002	1-527-831-00	FILTER, CERAMIC		
		DIODE		
D001	8-719-100-05	DIODE 1S2837		
		IC		
IC001	8-752-000-93	IC CX20009A		
IC002	8-759-600-53	IC CX20012		
IC003	8-759-600-52	IC CX20010A		
IC004	8-759-906-64	IC CX20038		
IC005	8-759-906-49	IC CX-7957		
		COIL		
L001	1-408-758-00	INDUCTOR CHIP 330UH		
L002	1-408-740-00	INDUCTOR CHIP 10UH		
L003	1-408-839-00	INDUCTOR CHIP 100UH		
L004	1-408-753-00	INDUCTOR CHIP 120UH		
L005	1-408-754-00	INDUCTOR CHIP 150UH		
L006	1-408-743-00	INDUCTOR CHIP 18UH		
		TRANSISTOR		
Q001	8-729-100-66	TRANSISTOR 2SC1623		
Q002	8-729-100-66	TRANSISTOR 2SC1623		
Q003	8-729-100-66	TRANSISTOR 2SC1623		
Q004	8-729-100-66	TRANSISTOR 2SC1623		
Q005	8-729-100-66	TRANSISTOR 2SC1623		
Q006	8-729-100-66	TRANSISTOR 2SC1623		
Q007	8-729-312-22	TRANSISTOR 2SA1122		
Q008	8-729-100-66	TRANSISTOR 2SC1623		
Q009	8-729-100-66	TRANSISTOR 2SC1623		
Q010	8-729-100-66	TRANSISTOR 2SC1623		
		RESISTOR		
R001	1-216-090-00	METAL CHIP	51K 5%	1/10W
R002	1-216-083-00	METAL CHIP	27K 5%	1/10W
R003	1-216-067-00	METAL CHIP	5.6K 5%	1/10W
R004	1-216-069-00	METAL CHIP	6.8K 5%	1/10W
R005	1-216-052-00	METAL CHIP	1.3K 5%	1/10W
R006	1-216-053-00	METAL CHIP	1.5K 5%	1/10W
R007	1-216-103-00	METAL CHIP	180K 5%	1/10W
R008	1-216-093-00	METAL CHIP	68K 5%	1/10W
R009	1-216-089-00	METAL CHIP	47K 5%	1/10W
R010	1-216-093-00	METAL CHIP	68K 5%	1/10W
R011	1-216-088-00	METAL CHIP	43K 5%	1/10W
R012	1-216-073-00	METAL CHIP	10K 5%	1/10W
R013	1-216-049-00	METAL CHIP	1K 5%	1/10W

When indicating parts by reference number, please include the board name.

Ref.No	Part No.	Description				Remark
R014	1-216-050-00	METAL CHIP	1.1K	5%	1/10W	
R015	1-216-063-00	METAL CHIP	3.9K	5%	1/10W	
R016	1-216-057-00	METAL CHIP	2.2K	5%	1/10W	
R017	1-216-085-00	METAL CHIP	33K	5%	1/10W	
R018	1-216-085-00	METAL CHIP	33K	5%	1/10W	
R019	1-216-061-00	METAL CHIP	3.3K	5%	1/10W	
R020	1-216-080-00	METAL CHIP	20K	5%	1/10W	
R021	1-216-064-00	METAL CHIP	4.3K	5%	1/10W	
R022	1-216-076-00	METAL CHIP	13K	5%	1/10W	
R023	1-216-081-00	METAL CHIP	22K	5%	1/10W	
R024	1-216-057-00	METAL CHIP	2.2K	5%	1/10W	
R025	1-216-080-00	METAL CHIP	20K	5%	1/10W	
R026	1-216-037-00	METAL CHIP	330	5%	1/10W	
R027	1-216-021-00	METAL CHIP	68	5%	1/10W	
R028	1-216-113-00	METAL CHIP	470K	5%	1/10W	
R029	1-216-056-00	METAL CHIP	2K	5%	1/10W	
R030	1-216-082-00	METAL CHIP	24K	5%	1/10W	
R031	1-216-049-00	METAL CHIP	1K	5%	1/10W	
R032	1-216-044-00	METAL CHIP	620	5%	1/10W	
R033	1-216-091-00	METAL CHIP	56K	5%	1/10W	
R034	1-216-081-00	METAL CHIP	22K	5%	1/10W	
R035	1-216-097-00	METAL CHIP	100K	5%	1/10W	
R036	1-216-081-00	METAL CHIP	22K	5%	1/10W	
R037	1-216-089-00	METAL CHIP	47K	5%	1/10W	
R038	1-216-065-00	METAL CHIP	4.7K	5%	1/10W	
R039	1-216-076-00	METAL CHIP	13K	5%	1/10W	
R040	1-216-085-00	METAL CHIP	33K	5%	1/10W	
R041	1-216-089-00	METAL CHIP	47K	5%	1/10W	
R042	1-216-097-00	METAL CHIP	100K	5%	1/10W	
R043	1-216-111-00	METAL CHIP	390K	5%	1/10W	
R044	1-216-085-00	METAL CHIP	33K	5%	1/10W	
R045	1-216-091-00	METAL CHIP	56K	5%	1/10W	
R046	1-216-057-00	METAL CHIP	2.2K	5%	1/10W	
R047	1-216-052-00	METAL CHIP	1.3K	5%	1/10W	
R048	1-216-056-00	METAL CHIP	2K	5%	1/10W	
R049	1-216-085-00	METAL CHIP	33K	5%	1/10W	
R050	1-216-085-00	METAL CHIP	33K	5%	1/10W	
R051	1-216-073-00	METAL CHIP	10K	5%	1/10W	
R052	1-216-085-00	METAL CHIP	33K	5%	1/10W	
R053	1-216-073-00	METAL CHIP	10K	5%	1/10W	
R054	1-216-097-00	METAL CHIP	100K	5%	1/10W	
R055	1-216-097-00	METAL CHIP	100K	5%	1/10W	
R056	1-216-040-00	METAL CHIP	430	5%	1/10W	
R057	1-216-097-00	METAL CHIP	100K	5%	1/10W	
R058	1-216-097-00	METAL CHIP	100K	5%	1/10W	
R059	1-216-089-00	METAL CHIP	47K	5%	1/10W	
R060	1-216-067-00	METAL CHIP	5.6K	5%	1/10W	

VARIABLE RESISTOR

RV001	1-228-827-00	RES, ADJ, METAL GLAZE 2.2K
RV002	1-228-828-00	RES, METAL GLAZE 4.7K

Ref.No	Part No.	Description				Remark
		CRYSTAL				
X001	1-567-074-21	VIBRATOR, CRYSTAL				
**********						
	*A-6710-400-A	VB-1 BOARD, COMPLETE				
		**********				
		CAPACITOR				
C003	1-163-038-00	CERAMIC CHIP 0.1MF				25V
C004	1-163-038-00	CERAMIC CHIP 0.1MF				25V
C005	1-163-038-00	CERAMIC CHIP 0.1MF				25V
		COIL				
L001	1-408-777-00	INDUCTOR CHIP 10UH				
		TRANSISTOR				
Q001	8-729-100-66	TRANSISTOR 2SC1623				
Q002	8-729-312-22	TRANSISTOR 2SA1122				
Q003	8-729-100-66	TRANSISTOR 2SC1623				
Q004	8-729-100-66	TRANSISTOR 2SC1623				
Q005	8-729-312-22	TRANSISTOR 2SA1122-C				
Q006	8-729-100-76	TRANSISTOR 2SA812				
Q007	8-729-100-66	TRANSISTOR 2SC1623				
Q008	8-729-101-07	TRANSISTOR 2SB798				
		RESISTOR				
R001	1-216-094-00	METAL CHIP	75K	5%	1/10W	
R002	1-216-098-00	METAL CHIP	110K	5%	1/10W	
R003	1-216-057-00	METAL CHIP	2.2K	5%	1/10W	
R004	1-216-025-00	METAL CHIP	100	5%	1/10W	
R005	1-216-059-00	METAL CHIP	2.7K	5%	1/10W	
R006	1-216-025-00	METAL CHIP	100	5%	1/10W	
R007	1-216-036-00	METAL CHIP	300	5%	1/10W	
R008	1-216-049-00	METAL CHIP	1K	5%	1/10W	
R009	1-216-013-00	METAL CHIP	33	5%	1/10W	
R010	1-216-013-00	METAL CHIP	33	5%	1/10W	
R011	1-216-011-00	METAL CHIP	27	5%	1/10W	
R012	1-216-081-00	METAL CHIP	22K	5%	1/10W	
R013	1-216-065-00	METAL CHIP	4.7K	5%	1/10W	
R014	1-216-091-00	METAL CHIP	56K	5%	1/10W	
R016	1-216-057-00	METAL CHIP	2.2K	5%	1/10W	
R017	1-216-091-00	METAL CHIP	56K	5%	1/10W	
**********						
	*A-6710-561-A	JG-1 BOARD, COMPLETE				
		**********				
		CAPACITOR				
C001	1-163-035-00	CERAMIC CHIP 0.047MF				50V
C003	1-163-021-00	CERAMIC CHIP 0.01MF		10%		50V
C004	1-163-035-00	CERAMIC CHIP 0.047MF				50V

When indicating parts by reference number, please include the board name.

VIDEO PARTS LIST

JG-1 RM-9

Ref.No	Part No.	Description		Remark
C005	1-135-056-00	TANTAL. CHIP 2.2MF	20%	20V
C006	1-163-113-00	CERAMIC CHIP 68PF	5%	50V
C007	1-163-021-00	CERAMIC CHIP 0.01MF	10%	50V
C008	1-163-104-00	CERAMIC CHIP 30PF	5%	50V
C009	1-163-035-00	CERAMIC CHIP 0.047MF		50V
C010	1-135-042-00	TANTAL. CHIP 0.1MF	20%	35V
C011	1-163-017-00	CERAMIC CHIP 0.0047MF	10%	50V
C012	1-135-059-00	TANTAL. CHIP 3.3MF	20%	16V
C013	1-135-059-00	TANTAL. CHIP 3.3MF	20%	16V
C014	1-135-062-00	TANTAL. CHIP 4.7MF	20%	10V
C015	1-135-062-00	TANTAL. CHIP 4.7MF	20%	10V
C016	1-163-021-00	CERAMIC CHIP 0.01MF	10%	50V
C020	1-163-064-00	CERAMIC CHIP 0.027MF	10%	50V
C022	1-163-021-00	CERAMIC CHIP 0.01MF	10%	50V
C023	1-163-035-00	CERAMIC CHIP 0.047MF		50V
C024	1-163-038-00	CERAMIC CHIP 0.1MF		25V
		FILTER		
CF001	1-567-073-00	FILTER, CERAMIC		
		DIODE		
D001	8-719-100-05	DIODE 1S2837		
D002	8-719-105-83	DIODE RD5.1M-B3		
D003	8-719-100-05	DIODE 1S2837		
		IC		
IC001	8-752-000-11	IC CX20001		
		COIL		
L001	1-408-745-00	INDUCTOR CHIP 27UH		
L002	1-408-891-00	INDUCTOR CHIP 2.7UH		
L003	1-408-891-00	INDUCTOR CHIP 2.7UH		
		TRANSISTOR		
Q001	8-729-100-66	TRANSISTOR 2SC1623		
Q002	8-729-100-66	TRANSISTOR 2SC1623		
Q003	8-729-100-66	TRANSISTOR 2SC1623		
Q004	8-729-100-66	TRANSISTOR 2SC1623		
Q005	8-729-100-66	TRANSISTOR 2SC1623		
Q006	8-729-312-22	TRANSISTOR 2SA1122		
Q007	8-729-100-66	TRANSISTOR 2SC1623		
Q008	8-729-100-66	TRANSISTOR 2SC1623		
Q009	8-729-312-22	TRANSISTOR 2SA1122		
Q012	8-729-100-66	TRANSISTOR 2SC1623		
Q013	8-729-100-66	TRANSISTOR 2SC1623		
		RESISTOR		
R001	1-216-036-00	METAL CHIP 300	5%	1/10W
R002	1-216-057-00	METAL CHIP 2.2K	5%	1/10W
R003	1-216-037-00	METAL CHIP 330	5%	1/10W
R004	1-216-071-00	METAL CHIP 8.2K	5%	1/10W
R005	1-216-049-00	METAL CHIP 1K	5%	1/10W

Ref.No	Part No.	Description			Remark
R006	1-216-071-00	METAL CHIP 8.2K	5%	1/10W	
R007	1-216-102-00	METAL CHIP 160K	5%	1/10W	
R008	1-216-071-00	METAL CHIP 8.2K	5%	1/10W	
R009	1-216-030-00	METAL CHIP 160	5%	1/10W	
R010	1-216-120-00	METAL CHIP 910K	5%	1/10W	
R011	1-216-097-00	METAL CHIP 100K	5%	1/10W	
R012	1-216-097-00	METAL CHIP 100K	5%	1/10W	
R013	1-216-087-00	METAL CHIP 39K	5%	1/10W	
R014	1-216-078-00	METAL CHIP 16K	5%	1/10W	
R015	1-216-077-00	METAL CHIP 15K	5%	1/10W	
R016	1-216-065-00	METAL CHIP 4.7K	5%	1/10W	
R017	1-216-093-00	METAL CHIP 68K	5%	1/10W	
R018	1-216-090-00	METAL CHIP 51K	5%	1/10W	
R019	1-216-092-00	METAL CHIP 62K	5%	1/10W	
R020	1-216-084-00	METAL CHIP 30K	5%	1/10W	
R021	1-216-087-00	METAL CHIP 39K	5%	1/10W	
R022	1-216-073-00	METAL CHIP 10K	5%	1/10W	
R023	1-216-091-00	METAL CHIP 56K	5%	1/10W	
R024	1-216-086-00	METAL CHIP 36K	5%	1/10W	
R025	1-216-093-00	METAL CHIP 68K	5%	1/10W	
R026	1-216-075-00	METAL CHIP 12K	5%	1/10W	
R027	1-216-073-00	METAL CHIP 10K	5%	1/10W	
R028	1-216-034-00	METAL CHIP 240	5%	1/10W	
R029	1-216-073-00	METAL CHIP 10K	5%	1/10W	
R030	1-216-081-00	METAL CHIP 22K	5%	1/10W	
R031	1-216-049-00	METAL CHIP 1K	5%	1/10W	
R032	1-216-091-00	METAL CHIP 56K	5%	1/10W	
R036	1-216-056-00	METAL CHIP 2K	5%	1/10W	
R037	1-216-073-00	METAL CHIP 10K	5%	1/10W	
R038	1-216-081-00	METAL CHIP 22K	5%	1/10W	
R039	1-216-073-00	METAL CHIP 10K	5%	1/10W	
R040	1-216-073-00	METAL CHIP 10K	5%	1/10W	
R041	1-216-089-00	METAL CHIP 47K	5%	1/10W	
R042	1-216-057-00	METAL CHIP 2.2K	5%	1/10W	
R043	1-216-080-00	METAL CHIP 20K	5%	1/10W	
R044	1-216-073-00	METAL CHIP 10K	5%	1/10W	
R045	1-216-073-00	METAL CHIP 10K	5%	1/10W	
R046	1-216-073-00	METAL CHIP 10K	5%	1/10W	
R047	1-216-085-00	METAL CHIP 33K	5%	1/10W	
R054	1-216-042-00	METAL CHIP 510	5%	1/10W	
		VARIABLE RESISTOR			
RV001	1-228-825-00	RES, ADJ, METAL GLAZE 470			
RV002	1-228-829-00	RES, METAL GLAZE 10K			
RV003	1-228-832-00	RES, METAL GLAZE 47K			

****

*A-6714-176-A RM-9 BOARD, COMPLETE
****

CAPACITOR

C001	1-163-013-00	CERAMIC CHIP 0.0022MF	10%	50V
C002	1-163-013-00	CERAMIC CHIP 0.0022MF	10%	50V

When indicating parts by reference number, please include the board name.

Ref.No	Part No.	Description		Remark
C003	1-163-035-00	CERAMIC CHIP 0.047MF		50V
C004	1-163-035-00	CERAMIC CHIP 0.047MF		50V
C005	1-135-056-00	TANTAL. CHIP 2.2MF	20%	20V
C006	1-135-056-00	TANTAL. CHIP 2.2MF	20%	20V
C007	1-135-058-00	TANTAL. CHIP 1MF	20%	16V
C008	1-135-058-00	TANTAL. CHIP 1MF	20%	16V
C009	1-135-058-00	TANTAL. CHIP 1MF	20%	16V
C010	1-135-058-00	TANTAL. CHIP 1MF	20%	16V
C011	1-163-075-00	CERAMIC CHIP 0.047MF	10%	25V
C012	1-163-075-00	CERAMIC CHIP 0.047MF	10%	25V
C013	1-163-013-00	CERAMIC CHIP 0.0022MF	10%	50V
C014	1-163-141-00	CERAMIC CHIP 0.001MF	5%	50V
C015	1-163-035-00	CERAMIC CHIP 0.047MF		50V
C016	1-135-058-00	TANTAL. CHIP 1MF	20%	16V
C017	1-135-058-00	TANTAL. CHIP 1MF	20%	16V
C018	1-163-017-00	CERAMIC CHIP 0.0047MF	10%	50V
C019	1-163-141-00	CERAMIC CHIP 0.001MF	5%	50V
C020	1-135-058-00	TANTAL. CHIP 1MF	20%	16V
C021	1-135-059-00	TANTAL. CHIP 3.3MF	20%	16V
C022	1-135-062-00	TANTAL. CHIP 4.7MF	20%	10V
C023	1-135-062-00	TANTAL. CHIP 4.7MF	20%	10V
C024	1-135-062-00	TANTAL. CHIP 4.7MF	20%	10V
C025	1-163-074-00	CERAMIC CHIP 0.033MF	10%	25V
C026	1-135-062-00	TANTAL. CHIP 4.7MF	20%	10V

DIODE

D001	8-719-101-23	DIODE 1SS123
D003	8-719-101-23	DIODE 1SS123
D005	8-719-100-05	DIODE 1S2837
D007	8-719-100-05	DIODE 1S2837
D008	8-719-100-05	DIODE 1S2837

IC

IC001	8-759-201-01	IC TC4066BF
IC002	8-759-100-95	IC UPC324G2
IC003	8-759-100-95	IC UPC324G2
IC005	8-759-100-93	IC UPC393G2

TRANSISTOR

Q001	8-729-100-66	TRANSISTOR 2SC1623
Q002	8-729-100-66	TRANSISTOR 2SC1623
Q003	8-729-100-66	TRANSISTOR 2SC1623
Q004	8-729-100-76	TRANSISTOR 2SA812
Q005	8-729-100-66	TRANSISTOR 2SC1623
Q006	8-729-100-76	TRANSISTOR 2SA812
Q007	8-729-100-76	TRANSISTOR 2SA812
Q008	8-729-100-66	TRANSISTOR 2SC1623
Q009	8-729-100-66	TRANSISTOR 2SC1623

RESISTOR

R001	1-216-052-00	METAL CHIP	1.3K	5%	1/10W
R002	1-216-052-00	METAL CHIP	1.3K	5%	1/10W
R003	1-216-089-00	METAL CHIP	47K	5%	1/10W
R004	1-216-089-00	METAL CHIP	47K	5%	1/10W
R005	1-216-117-00	METAL CHIP	680K	5%	1/10W
R006	1-216-089-00	METAL CHIP	47K	5%	1/10W
R007	1-216-117-00	METAL CHIP	680K	5%	1/10W
R008	1-216-089-00	METAL CHIP	47K	5%	1/10W
R009	1-216-089-00	METAL CHIP	47K	5%	1/10W
R010	1-216-089-00	METAL CHIP	47K	5%	1/10W
R011	1-216-073-00	METAL CHIP	10K	5%	1/10W
R012	1-216-113-00	METAL CHIP	470K	5%	1/10W
R013	1-216-097-00	METAL CHIP	100K	5%	1/10W
R014	1-216-049-00	METAL CHIP	1K	5%	1/10W
R015	1-216-089-00	METAL CHIP	47K	5%	1/10W
R016	1-216-089-00	METAL CHIP	47K	5%	1/10W
R017	1-216-097-00	METAL CHIP	100K	5%	1/10W
R018	1-216-097-00	METAL CHIP	100K	5%	1/10W
R019	1-216-097-00	METAL CHIP	100K	5%	1/10W
R020	1-216-081-00	METAL CHIP	22K	5%	1/10W
R021	1-216-081-00	METAL CHIP	22K	5%	1/10W
R022	1-216-097-00	METAL CHIP	100K	5%	1/10W
R023	1-216-089-00	METAL CHIP	47K	5%	1/10W
R024	1-216-089-00	METAL CHIP	47K	5%	1/10W
R025	1-216-089-00	METAL CHIP	47K	5%	1/10W
R026	1-216-105-00	METAL CHIP	220K	5%	1/10W
R027	1-216-057-00	METAL CHIP	2.2K	5%	1/10W
R028	1-216-077-00	METAL CHIP	15K	5%	1/10W
R029	1-216-073-00	METAL CHIP	10K	5%	1/10W
R030	1-216-089-00	METAL CHIP	47K	5%	1/10W
R031	1-216-089-00	METAL CHIP	47K	5%	1/10W
R032	1-216-095-00	METAL CHIP	82K	5%	1/10W
R033	1-216-113-00	METAL CHIP	470K	5%	1/10W
R034	1-216-072-00	METAL CHIP	9.1K	5%	1/10W
R035	1-216-081-00	METAL CHIP	22K	5%	1/10W
R036	1-216-073-00	METAL CHIP	10K	5%	1/10W
R037	1-216-112-00	METAL CHIP	430K	5%	1/10W
R038	1-216-081-00	METAL CHIP	22K	5%	1/10W
R039	1-216-072-00	METAL CHIP	9.1K	5%	1/10W
R040	1-216-073-00	METAL CHIP	10K	5%	1/10W
R041	1-216-065-00	METAL CHIP	4.7K	5%	1/10W
R042	1-216-065-00	METAL CHIP	4.7K	5%	1/10W
R043	1-216-049-00	METAL CHIP	1K	5%	1/10W
R044	1-216-097-00	METAL CHIP	100K	5%	1/10W
R045	1-216-113-00	METAL CHIP	470K	5%	1/10W
R046	1-216-081-00	METAL CHIP	22K	5%	1/10W
R047	1-216-098-00	METAL CHIP	110K	5%	1/10W
R048	1-216-081-00	METAL CHIP	22K	5%	1/10W
R049	1-216-060-00	METAL CHIP	3K	5%	1/10W
R050	1-216-060-00	METAL CHIP	3K	5%	1/10W
R051	1-216-033-00	METAL CHIP	220	5%	1/10W
R052	1-216-033-00	METAL CHIP	220	5%	1/10W
R053	1-216-073-00	METAL CHIP	10K	5%	1/10W
R054	1-216-073-00	METAL CHIP	10K	5%	1/10W
R057	1-216-060-00	METAL CHIP	3K	5%	1/10W
R058	1-216-060-00	METAL CHIP	3K	5%	1/10W
R059	1-216-077-00	METAL CHIP	15K	5%	1/10W

When indicating parts by reference number, please include the board name.

VIDEO PARTS LIST

RS-1 SV-11

Ref.No	Part No.	Description			Remark
	*A-6714-177-A	RS-1 BOARD, COMPLETE **********			
		CAPACITOR			
C001	1-135-062-00	TANTAL. CHIP 4.7MF	20%	10V	
C002	1-135-058-00	TANTAL. CHIP 1MF	20%	16V	
C003	1-163-035-00	CERAMIC CHIP 0.047MF		50V	
C006	1-163-035-00	CERAMIC CHIP 0.047MF		50V	
C007	1-163-021-00	CERAMIC CHIP 0.01MF	10%	50V	
C008	1-163-109-00	CERAMIC CHIP 47PF	5%	50V	
C009	1-163-109-00	CERAMIC CHIP 47PF	5%	50V	
		DIODE			
D001	8-719-100-05	DIODE 1S2837			
D002	8-719-100-05	DIODE 1S2837			
D003	8-719-100-03	DIODE 1S2835			
D004	8-719-100-03	DIODE 1S2835			
D005	8-719-100-03	DIODE 1S2835			
		IC			
IC001	8-759-200-99	IC TC4051BF			
IC002	8-759-200-99	IC TC4051BF			
IC003	8-759-903-02	IC MB8783			
IC004	8-759-100-93	IC UPC393G2			
		TRANSISTOR			
Q001	8-729-100-66	TRANSISTOR 2SC1623			
Q002	8-729-100-66	TRANSISTOR 2SC1623			
Q003	8-729-100-66	TRANSISTOR 2SC1623			
Q004	8-729-100-76	TRANSISTOR 2SA812			
Q005	8-729-100-66	TRANSISTOR 2SC1623			
Q006	8-729-100-66	TRANSISTOR 2SC1623			
Q007	8-729-100-66	TRANSISTOR 2SC1623			
Q008	8-729-100-66	TRANSISTOR 2SC1623			
Q009 ⚠	8-729-100-76	TRANSISTOR 2SA812			
Q010 ⚠	8-729-100-76	TRANSISTOR 2SA812			
		RESISTOR			
R001	1-216-089-00	METAL CHIP	47K	5% 1/10W	
R002	1-216-108-00	METAL CHIP	300K	5% 1/10W	
R003	1-216-099-00	METAL CHIP	120K	5% 1/10W	
R004	1-216-105-00	METAL CHIP	220K	5% 1/10W	
R005	1-216-089-00	METAL CHIP	47K	5% 1/10W	
R006	1-216-089-00	METAL CHIP	47K	5% 1/10W	
R007	1-216-080-00	METAL CHIP	20K	5% 1/10W	
R008	1-216-062-00	METAL CHIP	3.6K	5% 1/10W	
R009	1-216-059-00	METAL CHIP	2.7K	5% 1/10W	
R010	1-216-062-00	METAL CHIP	3.6K	5% 1/10W	
R011	1-216-089-00	METAL CHIP	47K	5% 1/10W	
R012	1-216-089-00	METAL CHIP	47K	5% 1/10W	
R013	1-216-089-00	METAL CHIP	47K	5% 1/10W	
R014	1-216-072-00	METAL CHIP	9.1K	5% 1/10W	
R015	1-216-048-00	METAL CHIP	910	5% 1/10W	
R016	1-216-052-00	METAL CHIP	1.3K	5% 1/10W	
R017	1-216-053-00	METAL CHIP	1.5K	5% 1/10W	
R018	1-216-081-00	METAL CHIP	22K	5% 1/10W	
R019	1-216-049-00	METAL CHIP	1K	5% 1/10W	
R020	1-216-067-00	METAL CHIP	5.6K	5% 1/10W	
R021	1-216-067-00	METAL CHIP	5.6K	5% 1/10W	
R022	1-216-089-00	METAL CHIP	47K	5% 1/10W	
R023	1-216-295-00	METAL CHIP	0	5% 1/10W	
R024	1-216-085-00	METAL CHIP	33K	5% 1/10W	
R025	1-216-089-00	METAL CHIP	47K	5% 1/10W	
R026	1-216-089-00	METAL CHIP	47K	5% 1/10W	
R027	1-216-089-00	METAL CHIP	47K	5% 1/10W	
R028	1-216-081-00	METAL CHIP	22K	5% 1/10W	
R029	1-216-081-00	METAL CHIP	22K	5% 1/10W	
R030	1-216-079-00	METAL CHIP	18K	5% 1/10W	
R031	1-216-061-00	METAL CHIP	3.3K	5% 1/10W	
R032	1-216-088-00	METAL CHIP	43K	5% 1/10W	
R033	1-216-077-00	METAL CHIP	15K	5% 1/10W	
R034	1-216-089-00	METAL CHIP	47K	5% 1/10W	
R035	1-216-089-00	METAL CHIP	47K	5% 1/10W	
R036	1-216-097-00	METAL CHIP	100K	5% 1/10W	
R037	1-216-295-00	METAL CHIP	0	5% 1/10W	
R038	1-216-295-00	METAL CHIP	0	5% 1/10W	
R039	1-216-049-00	METAL CHIP	1K	5% 1/10W	
R040	1-216-020-00	METAL CHIP	62	5% 1/10W	
R041	1-216-063-00	METAL CHIP	3.9K	5% 1/10W	
R042	1-216-049-00	METAL CHIP	1K	5% 1/10W	
R043	1-216-020-00	METAL CHIP	62	5% 1/10W	
R044	1-216-063-00	METAL CHIP	3.9K	5% 1/10W	
R045	1-216-195-00	METAL CHIP	750	5% 1/8W	
R046	1-216-195-00	METAL CHIP	750	5% 1/8W	
R047	1-216-195-00	METAL CHIP	750	5% 1/8W	
R048	1-216-195-00	METAL CHIP	750	5% 1/8W	
R049	1-216-107-00	METAL CHIP	270K	5% 1/10W	
	*A-6714-178-A	SV-11 BOARD, COMPLETE **********			
		CAPACITOR			
C001	1-163-021-00	CERAMIC CHIP 0.01MF		10% 50V	
C002	1-163-075-00	CERAMIC CHIP 0.047MF		10% 25V	
C003	1-135-059-00	TANTAL. CHIP 3.3MF		20% 16V	
C005	1-135-059-00	TANTAL. CHIP 3.3MF		20% 16V	
C006	1-163-075-00	CERAMIC CHIP 0.047MF		10% 25V	
C007	1-135-059-00	TANTAL. CHIP 3.3MF		20% 16V	
C008	1-163-021-00	CERAMIC CHIP 0.01MF		10% 50V	
C009	1-135-045-00	TANTAL. CHIP 0.33MF		10% 35V	
C010	1-163-075-00	CERAMIC CHIP 0.047MF		10% 25V	
C011	1-135-042-00	TANTAL. CHIP 0.1MF		20% 35V	
C012	1-163-024-00	CERAMIC CHIP 0.018MF		10% 50V	
C013	1-163-024-00	CERAMIC CHIP 0.018MF		10% 50V	
C014	1-163-021-00	CERAMIC CHIP 0.01MF		10% 50V	

The components identified by shading and mark ⚠ are critical for safety. Replace only with part number specified.

When indicating parts by reference number, please include the board name.

Ref.No	Part No.	Description			Remark
C015	1-135-059-00	TANTAL. CHIP 3.3MF	20%	16V	
C016	1-163-033-00	CERAMIC CHIP 0.022MF	10%	25V	
C017	1-163-143-00	CERAMIC CHIP 0.0012MF	5%	50V	
C018	1-163-024-00	CERAMIC CHIP 0.018MF	10%	50V	
C019	1-163-021-00	CERAMIC CHIP 0.01MF	10%	50V	
C020	1-163-024-00	CERAMIC CHIP 0.018MF	10%	50V	
C021	1-163-024-00	CERAMIC CHIP 0.018MF	10%	50V	
C022	1-163-035-00	CERAMIC CHIP 0.047MF		50V	
C023	1-163-021-00	CERAMIC CHIP 0.01MF	10%	50V	
C024	1-163-024-00	CERAMIC CHIP 0.018MF	10%	50V	
C025	1-135-062-00	TANTAL. CHIP 4.7MF	20%	10V	
C026	1-135-062-00	TANTAL. CHIP 4.7MF	20%	10V	
C027	1-135-058-00	TANTAL. CHIP 1MF	20%	16V	
C030	1-163-075-00	CERAMIC CHIP 0.047MF	10%	25V	
C034	1-163-075-00	CERAMIC CHIP 0.047MF	10%	25V	
C036	1-135-062-00	TANTAL. CHIP 4.7MF	20%	10V	
		DIODE			
D001	8-719-100-03	DIODE 1S2835			
D002	8-719-100-03	DIODE 1S2835			
D003	8-719-100-03	DIODE 1S2835			
D007	8-719-100-05	DIODE 1S2837			
D008	8-719-100-05	DIODE 1S2837			
		IC			
IC001	8-759-906-65	IC CX20049			
IC002	8-759-200-81	IC TC4053BF			
IC003	8-759-100-95	IC UPC324G2			
IC004	8-759-200-99	IC TC4051BF			
IC005	8-759-100-95	IC UPC324G2			
		TRANSISTOR			
Q001	8-729-100-66	TRANSISTOR 2SC1623			
Q002	8-729-100-66	TRANSISTOR 2SC1623			
Q003	8-729-100-66	TRANSISTOR 2SC1623			
Q006	8-729-100-66	TRANSISTOR 2SC1623			
Q008	8-729-100-66	TRANSISTOR 2SC1623			
Q009	8-729-100-66	TRANSISTOR 2SC1623			
		RESISTOR			
R001	1-216-049-00	METAL CHIP	1K	5%	1/10W
R002	1-216-081-00	METAL CHIP	22K	5%	1/10W
R003	1-216-073-00	METAL CHIP	10K	5%	1/10W
R005	1-216-049-00	METAL CHIP	1K	5%	1/10W
R006	1-216-049-00	METAL CHIP	1K	5%	1/10W
R007	1-216-081-00	METAL CHIP	22K	5%	1/10W
R008	1-216-077-00	METAL CHIP	15K	5%	1/10W
R009	1-216-089-00	METAL CHIP	47K	5%	1/10W
R010	1-216-089-00	METAL CHIP	47K	5%	1/10W
R011	1-216-049-00	METAL CHIP	1K	5%	1/10W
R012	1-216-049-00	METAL CHIP	1K	5%	1/10W
R013	1-216-077-00	METAL CHIP	15K	5%	1/10W
R014	1-216-097-00	METAL CHIP	100K	5%	1/10W

Ref.No	Part No.	Description			Remark
R015	1-216-089-00	METAL CHIP	47K	5%	1/10W
R016	1-216-064-00	METAL CHIP	4.3K	5%	1/10W
R017	1-216-059-00	METAL CHIP	2.7K	5%	1/10W
R018	1-216-089-00	METAL CHIP	47K	5%	1/10W
R019	1-216-117-00	METAL CHIP	680K	5%	1/10W
R020	1-216-083-00	METAL CHIP	27K	5%	1/10W
R021	1-216-065-00	METAL CHIP	4.7K	5%	1/10W
R022	1-216-097-00	METAL CHIP	100K	5%	1/10W
R023	1-216-089-00	METAL CHIP	47K	5%	1/10W
R025	1-216-084-00	METAL CHIP	30K	5%	1/10W
R026	1-216-050-00	METAL CHIP	1.1K	5%	1/10W
R027	1-216-051-00	METAL CHIP	1.2K	5%	1/10W
R028	1-216-050-00	METAL CHIP	1.1K	5%	1/10W
R029	1-216-073-00	METAL CHIP	10K	5%	1/10W
R031	1-216-071-00	METAL CHIP	8.2K	5%	1/10W
R032	1-216-066-00	METAL CHIP	5.1K	5%	1/10W
R036	1-216-097-00	METAL CHIP	100K	5%	1/10W
R037	1-216-097-00	METAL CHIP	100K	5%	1/10W
R039	1-216-101-00	METAL CHIP	150K	5%	1/10W
R040	1-216-101-00	METAL CHIP	150K	5%	1/10W
R041	1-216-085-00	METAL CHIP	33K	5%	1/10W
R042	1-216-089-00	METAL CHIP	47K	5%	1/10W
R043	1-216-101-00	METAL CHIP	150K	5%	1/10W
R044	1-216-065-00	METAL CHIP	4.7K	5%	1/10W
R045	1-216-093-00	METAL CHIP	68K	5%	1/10W
R051	1-216-101-00	METAL CHIP	150K	5%	1/10W
R052	1-216-101-00	METAL CHIP	150K	5%	1/10W
R053	1-216-075-00	METAL CHIP	12K	5%	1/10W
R054	1-216-065-00	METAL CHIP	4.7K	5%	1/10W
R055	1-216-042-00	METAL CHIP	510	5%	1/10W
R056	1-216-041-00	METAL CHIP	470	5%	1/10W
R057	1-216-089-00	METAL CHIP	47K	5%	1/10W
R058	1-216-083-00	METAL CHIP	27K	5%	1/10W
R059	1-216-057-00	METAL CHIP	2.2K	5%	1/10W
R060	1-216-065-00	METAL CHIP	4.7K	5%	1/10W
R061	1-216-073-00	METAL CHIP	10K	5%	1/10W
R062	1-216-085-00	METAL CHIP	33K	5%	1/10W
R063	1-216-097-00	METAL CHIP	100K	5%	1/10W
R064	1-216-097-00	METAL CHIP	100K	5%	1/10W
R065	1-216-085-00	METAL CHIP	33K	5%	1/10W
R066	1-216-089-00	METAL CHIP	47K	5%	1/10W
R067	1-216-089-00	METAL CHIP	47K	5%	1/10W
R068	1-216-105-00	METAL CHIP	220K	5%	1/10W
R069	1-216-105-00	METAL CHIP	220K	5%	1/10W
R070	1-216-085-00	METAL CHIP	33K	5%	1/10W
R071	1-216-085-00	METAL CHIP	33K	5%	1/10W
R072	1-216-085-00	METAL CHIP	33K	5%	1/10W
R073	1-216-081-00	METAL CHIP	22K	5%	1/10W
R074	1-216-098-00	METAL CHIP	110K	5%	1/10W

****

When indicating parts by reference number, please include the board name.

VIDEO PARTS LIST

SP-1 SD-1

Ref.No	Part No.	Description			Remark
	*A-6714-179-A	SP-1 BOARD, COMPLETE			
		**********			
		CAPACITOR			
C002	1-135-064-00	TANTAL. CHIP 2.2MF	20%	6.3V	
C003	1-135-065-00	TANTAL. CHIP 6.8MF	20%	6.3V	
C004	1-163-035-00	CERAMIC CHIP 0.047MF		50V	
C005	1-163-021-00	CERAMIC CHIP 0.01MF	10%	50V	
C006	1-163-035-00	CERAMIC CHIP 0.047MF		50V	
C007	1-163-117-00	CERAMIC CHIP 100PF	5%	50V	
C008	1-163-117-00	CERAMIC CHIP 100PF	5%	50V	
C009	1-135-062-00	TANTAL. CHIP 4.7MF	20%	10V	
C010	1-135-062-00	TANTAL. CHIP 4.7MF	20%	10V	
		DIODE			
D001	8-719-100-03	DIODE 1S2835			
D002	8-719-100-05	DIODE 1S2837			
D005	8-719-101-23	DIODE 1SS123			
D006	8-719-100-05	DIODE 1S2837			
		IC			
IC001	8-759-100-94	IC UPC358G2			
IC002	8-759-200-78	IC TC4030BF			
IC003	8-759-100-95	IC UPC324G2			
IC005	8-759-201-01	IC TC4066BF			
		TRANSISTOR			
Q001	8-729-100-66	TRANSISTOR 2SC1623			
Q002	8-729-100-66	TRANSISTOR 2SC1623			
Q003	8-729-100-66	TRANSISTOR 2SC1623			
Q004	8-729-100-66	TRANSISTOR 2SC1623			
Q005	8-729-100-66	TRANSISTOR 2SC1623			
		RESISTOR			
R017	1-216-073-00	METAL CHIP	10K	5%	1/10W
R018	1-216-053-00	METAL CHIP	1.5K	5%	1/10W
R019	1-216-077-00	METAL CHIP	15K	5%	1/10W
R020	1-216-101-00	METAL CHIP	150K	5%	1/10W
R021	1-216-097-00	METAL CHIP	100K	5%	1/10W
R022	1-216-121-00	METAL CHIP	1M	5%	1/10W
R023	1-216-077-00	METAL CHIP	15K	5%	1/10W
R024	1-216-061-00	METAL CHIP	3.3K	5%	1/10W
R025	1-216-103-00	METAL CHIP	180K	5%	1/10W
R026	1-216-121-00	METAL CHIP	1M	5%	1/10W
R027	1-216-058-00	METAL CHIP	2.4K	5%	1/10W
R028	1-216-058-00	METAL CHIP	2.4K	5%	1/10W
R029	1-216-113-00	METAL CHIP	470K	5%	1/10W
R030	1-216-085-00	METAL CHIP	33K	5%	1/10W
R031	1-216-106-00	METAL CHIP	240K	5%	1/10W
R032	1-216-106-00	METAL CHIP	240K	5%	1/10W
R033	1-216-085-00	METAL CHIP	33K	5%	1/10W
R034	1-216-113-00	METAL CHIP	470K	5%	1/10W
R035	1-216-058-00	METAL CHIP	2.4K	5%	1/10W
R036	1-216-058-00	METAL CHIP	2.4K	5%	1/10W
R037	1-216-121-00	METAL CHIP	1M	5%	1/10W
R038	1-216-081-00	METAL CHIP	22K	5%	1/10W
R039	1-216-081-00	METAL CHIP	22K	5%	1/10W
R040	1-216-073-00	METAL CHIP	10K	5%	1/10W
R041	1-216-073-00	METAL CHIP	10K	5%	1/10W
R042	1-216-073-00	METAL CHIP	10K	5%	1/10W
R043	1-216-073-00	METAL CHIP	10K	5%	1/10W
R044	1-216-075-00	METAL CHIP	12K	5%	1/10W
R045	1-216-075-00	METAL CHIP	12K	5%	1/10W
R046	1-216-075-00	METAL CHIP	12K	5%	1/10W
R047	1-216-075-00	METAL CHIP	12K	5%	1/10W
R048	1-216-073-00	METAL CHIP	10K	5%	1/10W
R049	1-216-049-00	METAL CHIP	1K	5%	1/10W
R050	1-216-093-00	METAL CHIP	68K	5%	1/10W
R051	1-216-093-00	METAL CHIP	68K	5%	1/10W
R052	1-216-043-00	METAL CHIP	560	5%	1/10W
R053	1-216-053-00	METAL CHIP	1.5K	5%	1/10W
R054	1-216-050-00	METAL CHIP	1.1K	5%	1/10W
R055	1-216-069-00	METAL CHIP	6.8K	5%	1/10W
R056	1-216-097-00	METAL CHIP	100K	5%	1/10W
R057	1-216-097-00	METAL CHIP	100K	5%	1/10W
		**********			
	*A-6714-236-A	SD-1 BOARD, COMPLETE			
		**********			
		CAPACITOR			
C001	1-163-035-00	CERAMIC CHIP 0.047MF		50V	
C002	1-135-058-00	TANTAL. CHIP 1MF	20%	16V	
C003	1-135-058-00	TANTAL. CHIP 1MF	20%	16V	
C004	1-163-035-00	CERAMIC CHIP 0.047MF		50V	
C005	1-163-125-00	CERAMIC CHIP 220PF	5%	50V	
C008	1-135-042-00	TANTAL. CHIP 0.1MF	20%	35V	
C009	1-135-064-00	TANTAL. CHIP 2.2MF	20%	6.3V	
C010	1-163-141-00	CERAMIC CHIP 0.001MF	10%	50V	
C011	1-163-021-00	CERAMIC CHIP 0.01MF	10%	50V	
C012	1-163-021-00	CERAMIC CHIP 0.01MF	10%	50V	
C013	1-163-075-00	CERAMIC CHIP 0.047MF	10%	25V	
C015	1-135-062-00	TANTAL. CHIP 4.7MF	20%	10V	
C016	1-135-062-00	TANTAL. CHIP 4.7MF	20%	10V	
C019	1-163-141-00	CERAMIC CHIP 0.001MF	10%	50V	
		DIODE			
D001	8-719-100-03	DIODE 1S2835			
D002	8-719-100-03	DIODE 1S2835			
D003	8-719-100-03	DIODE 1S2835			
D005	8-719-100-05	DIODE 1S2837			
D007	8-719-100-05	DIODE 1S2837			
D008	8-719-100-03	DIODE 1S2835			
D009	8-719-100-03	DIODE 1S2835			
D010	8-719-100-05	DIODE 1S2837			

When indicating parts by reference number, please include the board name.

Ref.No	Part No.	Description				Remark
		IC				
IC001	8-759-906-22	IC MB3759PF				
IC002	8-759-903-02	IC MB8783				
IC003	8-759-100-97	IC UPC339G2				
IC004	8-759-201-00	IC TC4052BF				
		TRANSISTOR				
Q001	8-729-100-76	TRANSISTOR 2SA812				
Q003	8-729-100-66	TRANSISTOR 2SC1623				
Q004 ⚠	8-729-100-76	TRANSISTOR 2SA812				
Q013	8-729-100-66	TRANSISTOR 2SC1623				
Q015	8-729-100-66	TRANSISTOR 2SC1623				
Q016	8-729-100-66	TRANSISTOR 2SC1623				
Q017	8-729-100-66	TRANSISTOR 2SC1623				
Q018	8-729-100-66	TRANSISTOR 2SC1623				
		RESISTOR				
R001	1-216-041-00	METAL CHIP	470	5%	1/10W	
R002	1-216-095-00	METAL CHIP	82K	5%	1/10W	
R003	1-216-110-00	METAL CHIP	360K	5%	1/10W	
R004	1-216-085-00	METAL CHIP	33K	5%	1/10W	
R005	1-216-085-00	METAL CHIP	33K	5%	1/10W	
R006	1-216-063-00	METAL CHIP	3.9K	5%	1/10W	
R007	1-216-065-00	METAL CHIP	4.7K	5%	1/10W	
R008	1-216-073-00	METAL CHIP	10K	5%	1/10W	
R009	1-216-020-00	METAL CHIP	62	5%	1/10W	
R012	1-216-065-00	METAL CHIP	4.7K	5%	1/10W	
R014	1-216-049-00	METAL CHIP	1K	5%	1/10W	
R027	1-216-106-00	METAL CHIP	240K	5%	1/10W	
R028	1-216-107-00	METAL CHIP	270K	5%	1/10W	
R029	1-216-049-00	METAL CHIP	1K	5%	1/10W	
R030	1-216-067-00	METAL CHIP	5.6K	5%	1/10W	
R031	1-216-067-00	METAL CHIP	5.6K	5%	1/10W	
R032	1-216-049-00	METAL CHIP	1K	5%	1/10W	
R038	1-216-070-00	METAL CHIP	7.5K	5%	1/10W	
R039	1-216-081-00	METAL CHIP	22K	5%	1/10W	
R040	1-216-089-00	METAL CHIP	47K	5%	1/10W	
R041	1-216-089-00	METAL CHIP	47K	5%	1/10W	
R043	1-216-073-00	METAL CHIP	10K	5%	1/10W	
R044	1-216-089-00	METAL CHIP	47K	5%	1/10W	
R045	1-216-097-00	METAL CHIP	100K	5%	1/10W	
R046	1-216-105-00	METAL CHIP	220K	5%	1/10W	
R047	1-216-073-00	METAL CHIP	10K	5%	1/10W	
R053	1-216-056-00	METAL CHIP	2K	5%	1/10W	
R054	1-216-081-00	METAL CHIP	22K	5%	1/10W	
R055	1-216-073-00	METAL CHIP	10K	5%	1/10W	
R056	1-216-081-00	METAL CHIP	22K	5%	1/10W	
R057	1-216-077-00	METAL CHIP	15K	5%	1/10W	
R058	1-216-097-00	METAL CHIP	100K	5%	1/10W	
R059	1-216-114-00	METAL CHIP	510K	5%	1/10W	
R060	1-216-203-00	METAL CHIP	1.6K	5%	1/8W	
R061	1-216-203-00	METAL CHIP	1.6K	5%	1/8W	
R062	1-216-203-00	METAL CHIP	1.6K	5%	1/8W	
R063	1-216-073-00	METAL CHIP	10K	5%	1/10W	
R064	1-216-089-00	METAL CHIP	47K	5%	1/10W	
R065	1-216-093-00	METAL CHIP	68K	5%	1/10W	
R066	1-216-061-00	METAL CHIP	3.3K	5%	1/10W	
R068	1-216-081-00	METAL CHIP	22K	5%	1/10W	
R069	1-216-093-00	METAL CHIP	68K	5%	1/10W	
R070	1-216-089-00	METAL CHIP	47K	5%	1/10W	
R071	1-216-064-00	METAL CHIP	4.3K	5%	1/10W	
R072	1-216-059-00	METAL CHIP	2.7K	5%	1/10W	
R073	1-216-203-00	METAL CHIP	1.6K	5%	1/8W	
R074	1-216-203-00	METAL CHIP	1.6K	5%	1/8W	

****

*A-6722-252-A PC-5 BOARD, COMPLETE

****

Ref.No	Part No.	Description				Remark
		CAPACITOR				
C001	1-163-017-00	CERAMIC CHIP	0.0047MF	10%	50V	
C003	1-135-056-00	TANTAL. CHIP	2.2MF	20%	20V	
C004	1-135-065-00	TANTAL. CHIP	6.8MF	20%	6.3V	
		DIODE				
D001	8-719-100-05	DIODE 1S2837				
D002	8-719-100-05	DIODE 1S2837				
D003	8-719-100-05	DIODE 1S2837				
D004 ⚠	8-719-100-05	DIODE 1S2837				
D005	8-719-106-17	DIODE RD6.8M-B2				
D014	8-719-100-05	DIODE 1S2837				
D015	8-719-100-03	DIODE 1S2835				
D016	8-719-100-05	DIODE 1S2837				
		TRANSISTOR				
Q001 ⚠	8-729-101-07	TRANSISTOR 2SB798				
Q002	8-729-100-66	TRANSISTOR 2SC1623				
Q003	8-729-100-76	TRANSISTOR 2SA812				
Q004	8-729-100-76	TRANSISTOR 2SA812				
Q005	8-729-100-66	TRANSISTOR 2SC1623				
Q006 ⚠	8-729-100-66	TRANSISTOR 2SC1623				
Q016	8-729-100-66	TRANSISTOR 2SC1623				
Q022	8-729-100-66	TRANSISTOR 2SC1623				
Q023	8-729-100-66	TRANSISTOR 2SC1623				
Q024	8-729-100-66	TRANSISTOR 2SC1623				
		RESISTOR				
R001	1-216-089-00	METAL CHIP	47K	5%	1/10W	
R002	1-216-097-00	METAL CHIP	100K	5%	1/10W	
R003	1-216-097-00	METAL CHIP	100K	5%	1/10W	
R004	1-216-073-00	METAL CHIP	10K	5%	1/10W	
R005	1-216-089-00	METAL CHIP	47K	5%	1/10W	
R006	1-216-089-00	METAL CHIP	47K	5%	1/10W	
R007	1-216-113-00	METAL CHIP	470K	5%	1/10W	
R008	1-216-109-00	METAL CHIP	330K	5%	1/10W	

When indicating parts by reference number, please include the board name.

The components identified by shading and mark ⚠ are critical for safety. Replace only with part number specified.

PC-5 AD-9 TS-43 LU-1

Ref.No	Part No.	Description			Remark
R009	1-216-057-00	METAL CHIP	2.2K	5% 1/10W	
R010	1-216-097-00	METAL CHIP	100K	5% 1/10W	
R011	1-216-113-00	METAL CHIP	470K	5% 1/10W	
R031	1-216-089-00	METAL CHIP	47K	5% 1/10W	
R034	1-216-089-00	METAL CHIP	47K	5% 1/10W	
R048	1-216-120-00	METAL CHIP	910K	5% 1/10W	
R049	1-216-073-00	METAL CHIP	10K	5% 1/10W	

****

*A-6712-154-B AD-9 BOARD, COMPLETE
****

CAPACITOR

C001	1-163-145-00	CERAMIC CHIP 0.0015MF	5%	50V
C002	1-163-143-00	CERAMIC CHIP 0.0012MF	5%	50V
C004	1-163-015-00	CERAMIC CHIP 0.0033MF	10%	50V
C005	1-135-059-00	TANTAL. CHIP 3.3MF	20%	16V
C006	1-135-059-00	TANTAL. CHIP 3.3MF	20%	16V
C007	1-163-117-00	CERAMIC CHIP 100PF	5%	50V
C011	1-135-062-00	TANTAL. CHIP 4.7MF	20%	10V
C013	1-135-043-00	TANTAL. CHIP 0.15MF	20%	35V
C014	1-135-052-00	TANTAL. CHIP 0.47MF	20%	25V
C016	1-135-062-00	TANTAL. CHIP 4.7MF	20%	10V
C017	1-135-058-00	TANTAL. CHIP 1MF	20%	16V
C019	1-163-075-00	CERAMIC CHIP 0.047MF	10%	25V
C020	1-163-129-00	CERAMIC CHIP 330PF	5%	50V
C021	1-163-038-00	CERAMIC CHIP 0.1MF		25V
C022	1-163-129-00	CERAMIC CHIP 330PF	5%	50V

DIODE

D001	8-719-100-05	DIODE 1S2837
D002	8-719-100-05	DIODE 1S2837
D003	8-719-106-08	DIODE RD6.2M-B2

IC

IC001	8-759-800-43	IC LA7043M

TRANSISTOR

Q001	8-729-103-52	TRANSISTOR 2SC1654
Q002	8-729-103-52	TRANSISTOR 2SC1654
Q003	8-729-216-32	TRANSISTOR 2SA1163
Q004	8-729-100-66	TRANSISTOR 2SC1623
Q006	8-729-101-07	TRANSISTOR 2SB798
Q007	8-729-199-92	TRANSISTOR 2SD999
Q008	8-729-100-76	TRANSISTOR 2SA812
Q009	8-729-100-66	TRANSISTOR 2SC1623
Q010	8-729-100-76	TRANSISTOR 2SA812
Q011	8-729-100-66	TRANSISTOR 2SC1623

RESISTOR

R001	1-216-101-00	METAL CHIP	150K	5%	1/10W
R002	1-216-091-00	METAL CHIP	56K	5%	1/10W
R003	1-216-101-00	METAL CHIP	150K	5%	1/10W
R004	1-216-065-00	METAL CHIP	4.7K	5%	1/10W
R005	1-216-079-00	METAL CHIP	18K	5%	1/10W
R006	1-216-111-00	METAL CHIP	390K	5%	1/10W
R007	1-216-025-00	METAL CHIP	100	5%	1/10W
R008	1-216-065-00	METAL CHIP	4.7K	5%	1/10W
R009	1-216-065-00	METAL CHIP	4.7K	5%	1/10W
R010	1-216-065-00	METAL CHIP	4.7K	5%	1/10W
R011	1-216-073-00	METAL CHIP	10K	5%	1/10W
R012	1-216-080-00	METAL CHIP	20K	5%	1/10W
R015	1-216-069-00	METAL CHIP	6.8K	5%	1/10W

The components identified by shading and mark ⚠ are critical for safety. Replace only with part number specified.

When indicating parts by reference number, please include the board name.

Ref.No	Part No.	Description			Remark
R016	1-216-071-00	METAL CHIP	8.2K	5% 1/10W	
R017	1-216-065-00	METAL CHIP	4.7K	5% 1/10W	
R018	1-216-073-00	METAL CHIP	10K	5% 1/10W	
R019	1-216-057-00	METAL CHIP	2.2K	5% 1/10W	
R020	1-216-057-00	METAL CHIP	2.2K	5% 1/10W	
R021	1-216-065-00	METAL CHIP	4.7K	5% 1/10W	
R022	1-216-073-00	METAL CHIP	10K	5% 1/10W	
R024	1-216-057-00	METAL CHIP	2.2K	5% 1/10W	
R025	1-216-113-00	METAL CHIP	470K	5% 1/10W	
R026	1-216-089-00	METAL CHIP	47K	5% 1/10W	
R027	1-216-089-00	METAL CHIP	47K	5% 1/10W	
R028	1-216-065-00	METAL CHIP	4.7K	5% 1/10W	
R031	1-216-121-00	METAL CHIP	1M	5% 1/10W	
R032	1-216-075-00	METAL CHIP	12K	5% 1/10W	
R034	1-216-097-00	METAL CHIP	100K	5% 1/10W	
R036	1-216-080-00	METAL CHIP	20K	5% 1/10W	
R038	1-216-094-00	METAL CHIP	75K	5% 1/10W	
R039	1-216-101-00	METAL CHIP	150K	5% 1/10W	

****

*1-613-194-11 TS-43 BOARD
****

	1-554-371-00	SWITCH, TACT
	1-935-032-11	HARNESS (CA-6)

****

*1-613-192-11 LU-1 BOARD
****

CONNECTOR

CN001	*1-560-467-00	PIN, CONNECTOR 4P
CN002	*1-560-468-00	PIN, CONNECTOR 5P
CN003	*1-560-467-00	PIN, CONNECTOR 4P
CN004	*1-560-456-00	PIN, CONNECTOR 2P
CN005	*1-560-456-00	PIN, CONNECTOR 2P
CN006	*1-560-466-00	PIN, CONNECTOR 3P

****

MISCELLANEOUS
****

⚠	A-6749-079-A	SOLENOID BLOCK ASSY, PINCH
	A-6761-055-A	ACE ASSY
	1-205-752-11	RES, CEMENT WIREWOUND 4.7
	1-446-961-31	HEATER, PTC
	1-464-246-00	SENSOR, S COIL
	1-464-247-00	SENSOR, T COIL
	1-806-230-42	SENSOR, DEW CONDENSATION
	1-806-633-00	ELEMENT, MAGNETIC RESISTOR
	8-825-508-20	HEAD, FE
	8-835-086-01	MOTOR, DC (DNR-6100A)
	8-838-040-01	MOTOR, DC (BHF-1906A)
⚠	8-838-041-01	MOTOR, DC (BHF-1801A)
S1001	1-553-718-00	SWITCH, MICRO
S1002	1-553-718-00	SWITCH, MICRO
S1003	1-553-717-00	SWITCH, MICRO

****

ACCESSORIES AND PACKING MATERIALS
****

PART No.	Description	Remark
3-531-576-01	RIVET	

****

RM-27

SERVICE MANUAL



September, 1984

The RM-27 is a wired remote control/microphone unit for use with the Sony FP-60 series color video projector.
The RM-27 will not only enable you to operate the VCR of the projector at a distance as a remote control unit but will function as a microphone for additional demonstrating narration to the display of the projector.

SPECIFICATIONS

Power requirements	1.5 V DC supplied from the projector
Dimensions	31 × 18 × 156 mm (w/h/d) ($1\frac{1}{4} \times \frac{11}{16} \times 6\frac{1}{4}$ inches) including projecting parts
Weight	Approx. 235 g (8.2 oz) including cable
Cable length	Approx. 3 m ($9\frac{5}{8}$ feet)
Microphone	Electret condensor microphone (omni-directional)

Design and specifications subject to change without notice.

PRECAUTIONS

- The unit should never be dropped or subjected to extreme shock.
- Keep the unit away from extremely high temperatures (above 60°C or 140°F).

MICROFILM

REMOTE COMMANDER

SONY®

14-1. REMOTE CONTROL OPERATION

FUNCTION OF CONTROLS

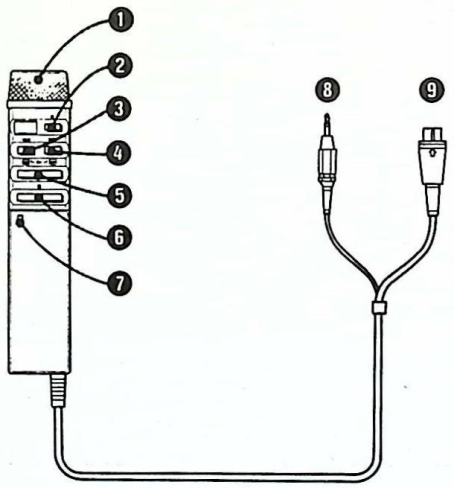

❶ Microphone head
Speak into this head when using the microphone.
❷ Pause button
Press to stop recording or playback momentarily.
When this button is depressed during playback, a still picture will be displayed. Press again to resume recording or playback.
The pause mode will be automatically released after about 8 minutes.
❸ Rewind button
Press to rewind the tape.
When this button is pressed and held during playback or while rewinding, you can view a high-speed picture in reverse.
❹ Fast-forward button
Press to advance the tape rapidly.
When this button is pressed and held during playback or while rapidly advancing the tape, you can view a high-speed picture.
❺ Play button
Press to play back the tape.
❻ Stop button
Press to stop the tape.
❼ MIC (microphone) power ON/OFF switch
Set to ON to turn on the microphone.
Set to OFF when the microphone is not to be used.
❽ Microphone mini plug
Connect to the MIC jack of the FP-60 when using the microphone.
❾ 8-pin remote control plug
Connect to the REMOTE jack of the FP-60 for remote control.

CONNECTION

Notes
- What you say into the microphone will not be recorded by the VCR of the projector.
- If the microphone is placed too near the speakers, a howling effect (acoustic feedback) may occur. If this happens, change the direction of the microphone until the howling stops, or decrease the speaker volume.

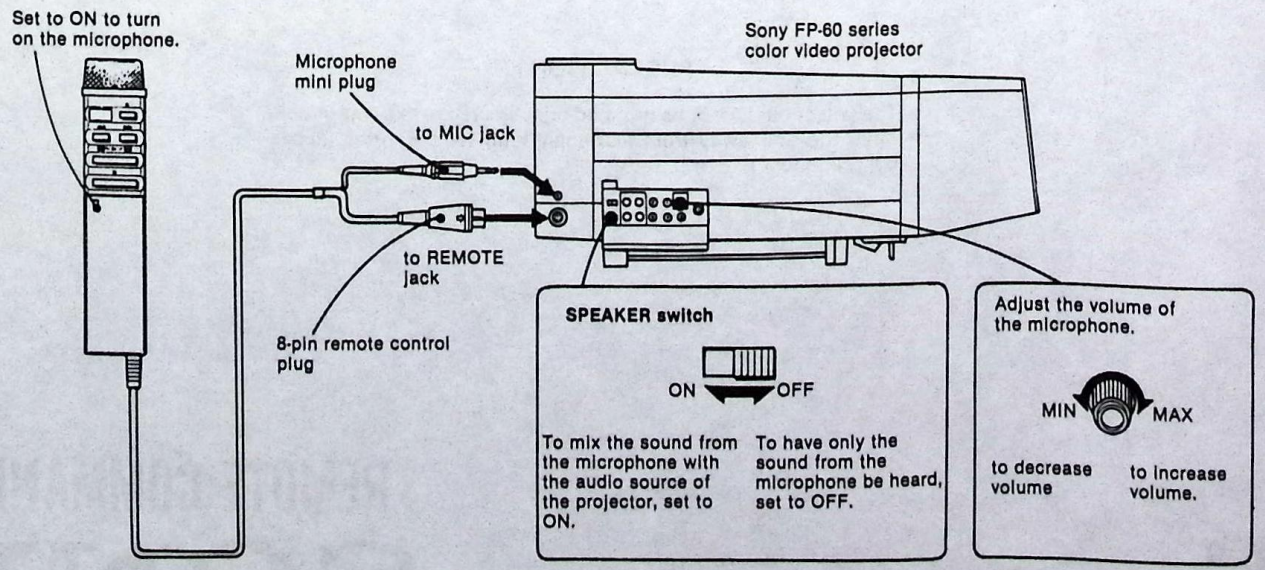

14-2. REMOTE CONTROL CIRCUIT

This equipment comes with wired remote control attached with MIC, and PB, STOP, FF, REW, and PAUSE functions can be remote controlled. IC1 (μPD652C-035) is used for remote control signal processing. This is a microcomputer to generate SCO codes. A total of 64 SCO codes can be generated by an 8 x 8 input matrix. In principle, double pressing of keys is prohibited, and the previous code is kept output until all the keys are released. In operation, seven-bit codes corresponding to the key matrix input are input to Pin (15) of IC1 ($\overline{SCO}$) on the FD-3 Board, and the mode for which the key is pressed is input. The pin configuration is shown below.

Pin No.	Symbol	Operation
1	CL1	Clock oscillation
2	KI5	Matrix input
3	KI6	Matrix input
4	KI7	Matrix input
5	KI8	Matrix input
6	INH	Key is valid with "L", invalid with "H"
7	F1	1 REC mode is set up with "L", 2 REC mode of REC and PB is set up with "H"
8	F2	Priority is given to first pressed with "L", priority is given to last pressed only in FF and REW with "H"
9	LAMP	Flickers at intervals of 90 ms while $\overline{SCO}$ is output
10	KO1	Matrix output
11	KO2	Matrix output
12	KO3	Matrix output
13	KO4	Matrix output
14	Vcc	5V
15	TEST	Make sure to connect to 5 V
16	KO5	Matrix output
17	KO6	Matrix output
18	KO7	Matrix output
19	KO8	Matrix output
20	SCO	SCO output positive polarity
21	KI1	Matrix input
22	KI2	Matrix input
23	KI3	Matrix input
24	KI4	Matrix input
25	$\overline{INT}$	Connect to 5 V
26	RES	RESET with "H"
27	Vss	OV
28	CLo.	Clock oscillation

14-3. PINCH PLUNGER EMERGENCY RELEASE CIRCUIT

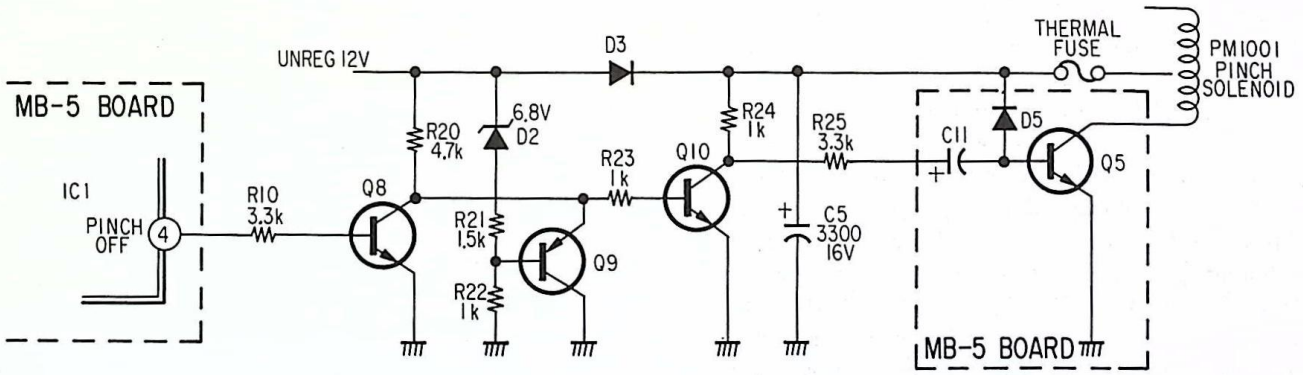

The pinch plunger emergency release circuit is shown above. In normal pinch OFF operation, the level of Pin (4) of IC1 (PINCH OFF) becomes "H" to turn ON Q8. As a result, Q10 turns OFF and Q5 turns ON, with the current from UNREG 12 V switching off the pinch solenoid and flowing to Q5. Next, circuit operation in an emergency state, that is, when AC power is exhausted, is described. COM 12 V of the plunger is backed up by C5, and Q10 is in an ON state, while Q5 is in an OFF state. Q9 is momentarily switched on by the anti-reverse current diode D3 for the discharge current of C5 and by the 6.8 V Zener diode D2, and A10 is turned off while Q5 is turned on as a result. The pinch plunger is always released even when UNREG 12 V is exhausted.

14-4. BUZZER OSCILLATION CIRCUIT

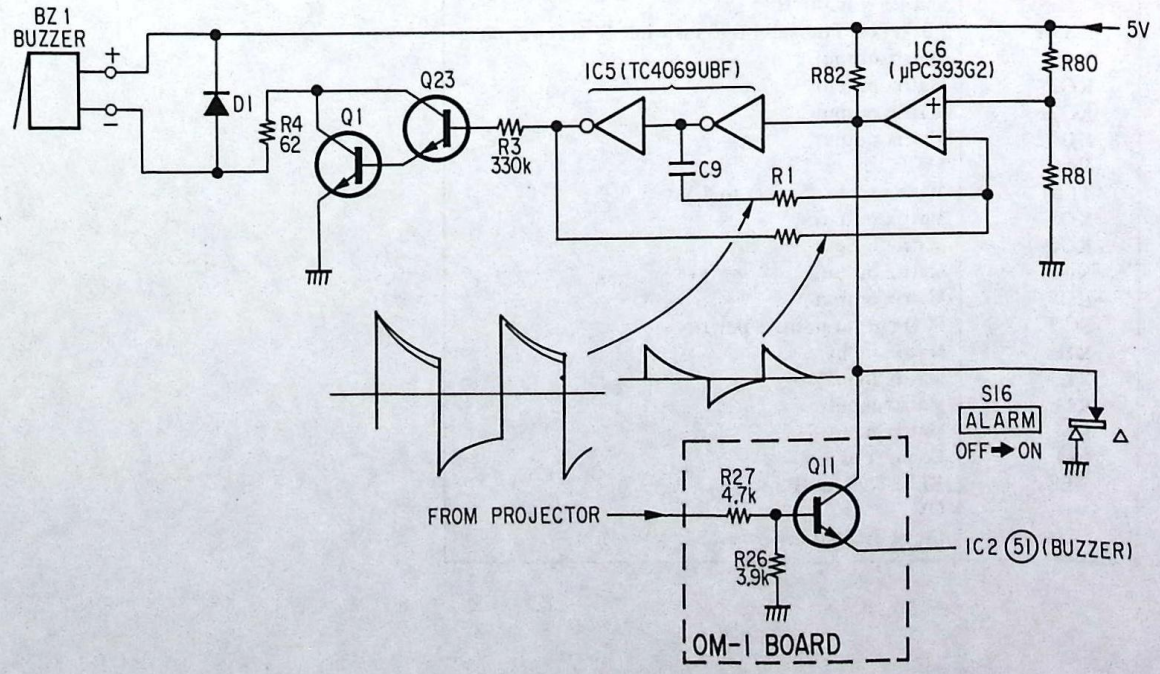

The buzzer oscillation circuit and waveforms of it are shown above. The buzzer is of a compact winding type. Normally, Q11 is turned ON, and oscillation is not performed. When a function key of the VTR is pressed, a serial code is output from Pin (51) of IC2, and the buzzer oscillation circuit opens to start oscillation and to output a sound from the buzzer. When a function key on the projector is pressed, Q11 is switched off, the buzzer oscillation circuit functions, and a sound is output.

14-5. SCHEMATIC DIAGRAM

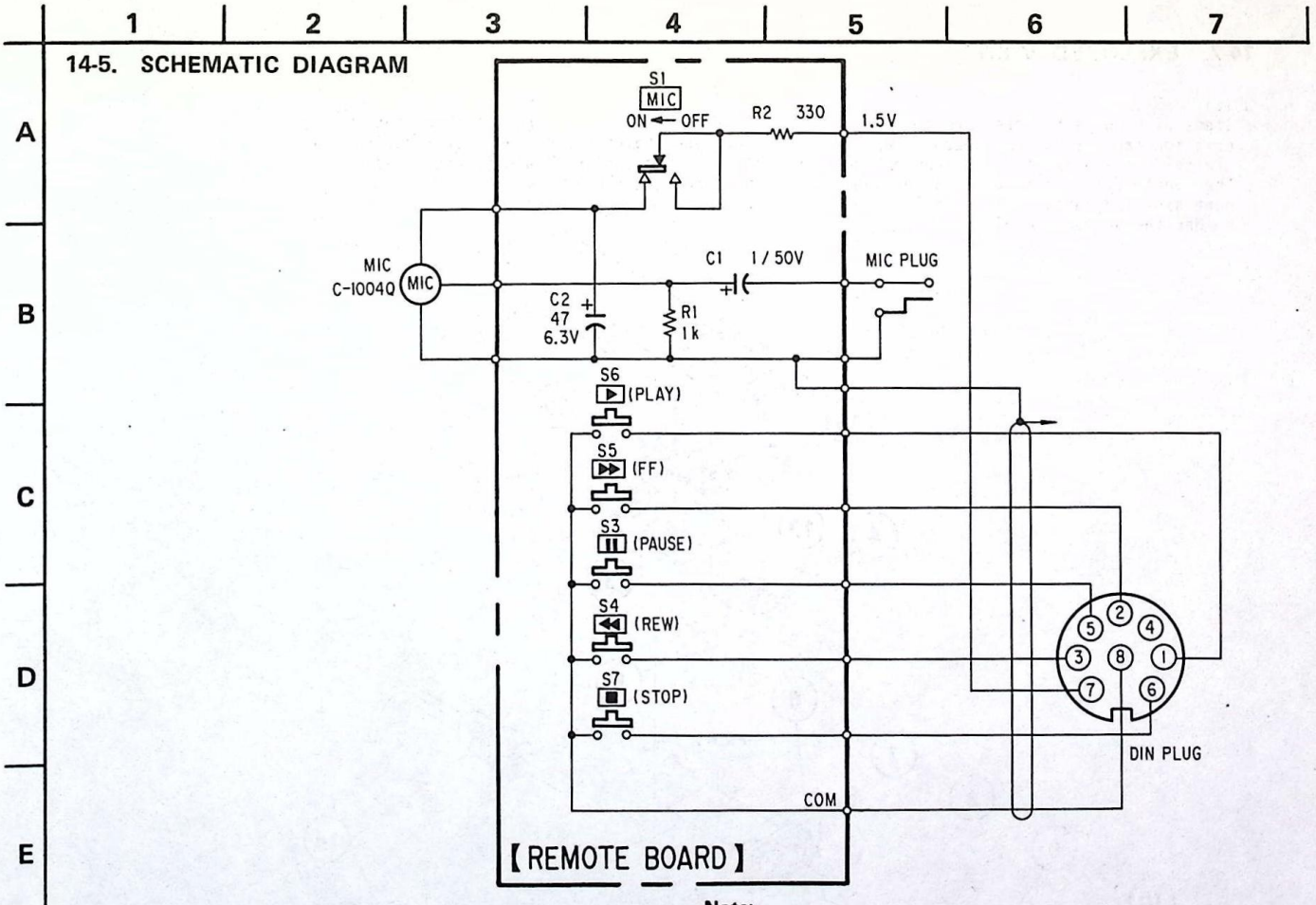

Note:

- Color code of sleeving over the end of the jacket.

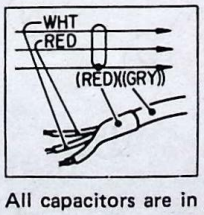

- All capacitors are in μF unless otherwise noted. pF: μμF 50WV or less are not indicated except for electrolytics.
- All resistors are in ohms, 1/6W unless otherwise noted. kΩ: 1000 Ω, MΩ: 1000 kΩ

14-6. PRINTED WIRING BOARD —*Conductor Side*—

14-7. EXPLODED VIEW

NOTE:
- Items with no part number and no description are not stocked because they are seldom required for routine service.
- The construction parts of an assembled part are indicated with a collation number in the remark column.
- Items marked " * " are not stocked since they are seldom required for routine service. Some delay should be anticipated when ordering these items.

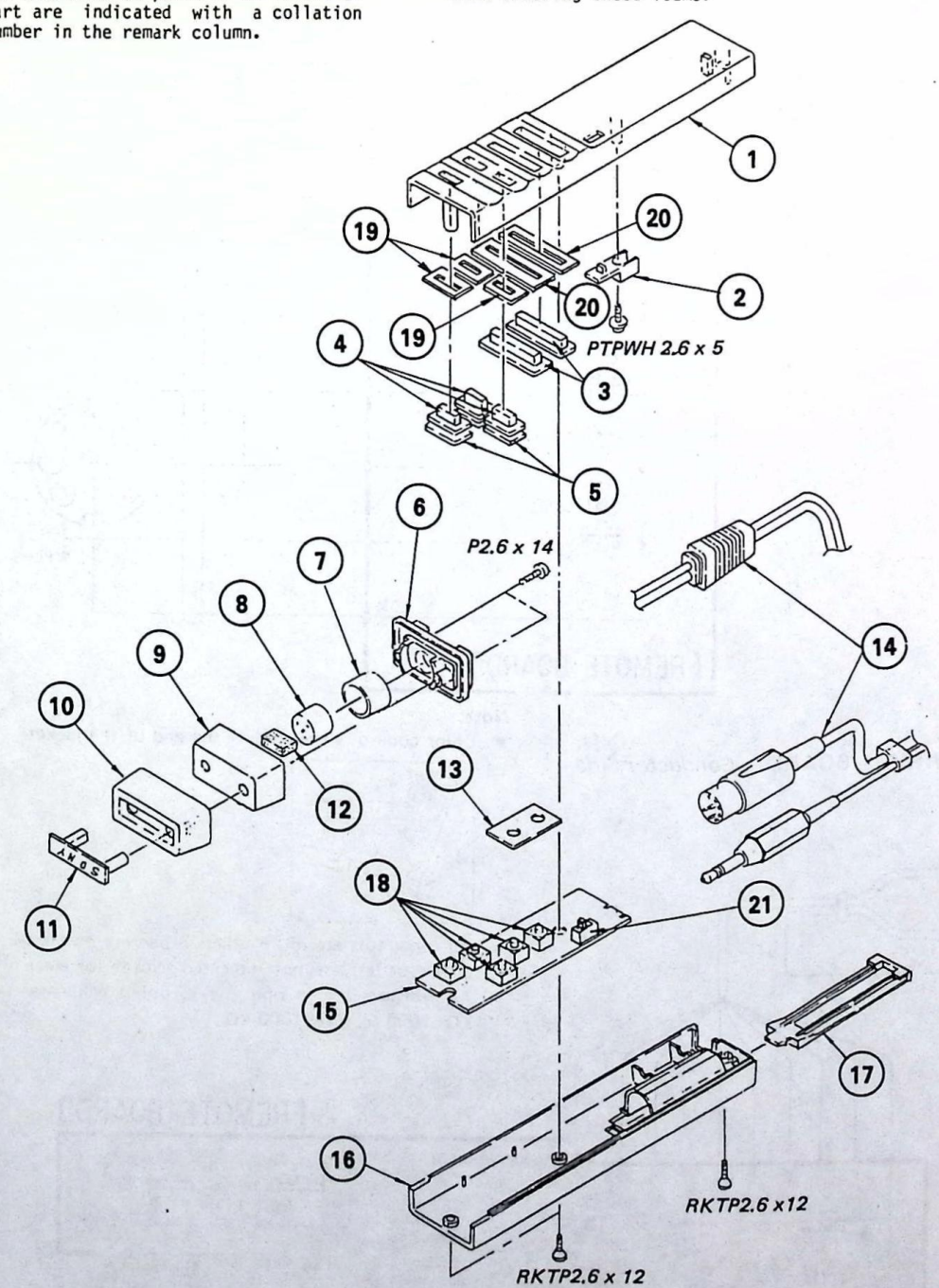

No.	Part No.	Description	Remark
1	2-272-613-21	CASE (UPPER)	
2	2-272-605-21	KNOB, SLIDE	
3	2-272-604-00	KEY TOP (C)	
4	2-272-603-01	KEY TOP (A)	
5	2-272-609-00	SPACER	
6	2-272-612-00	ESCUTCHEON	
7	*2-272-632-00	CUSHION, MICROPHONE	
8	8-814-189-31	MICROPHONE, BUILT-IN	
9	2-272-606-00	FILTER, DUST PROTECTION	
10	2-272-601-11	SCREEN, TOP	
11	2-272-602-00	EMBLEM, MOLD	
13	2-272-607-00	CUSHION, KEY TOP	
14	1-555-283-21	CORD (WITH PLUG)	
15	*1-602-395-00	PC BOARD	
16	2-272-614-21	CASE (LOWER)	
17	2-272-623-01	LID	
18	1-552-868-21	SWITCH, PUSH	
19	2-272-630-01	CUSHION (A), UPPER CASE	
20	2-272-631-01	CUSHION (B), UPPER CASE	
21	1-552-430-00	SWITCH, SLIDE	

14-8. ELECTRICAL PARTS LIST

- All variable and adjustable resistors have characteristic curve B, unless otherwise noted.
- Items marked " * " are not stocked since they are seldom required for routine service. Some delay should be anticipated when ordering these items.

CAPACITORS
- MF : μF, PF : μμF

RESISTORS
- All resistors are in ohms
- F : nonflammable

Ref.No	Part No.	Description			Remark
	*1-602-395-00	PC BOARD *********			
	1-555-283-21	CORD (WITH PLUG)			
	2-272-607-00	CUSHION, KEY TOP			
	*2-272-632-00	CUSHION, MICROPHONE			
	8-814-189-31	MICROPHONE, BUILT-IN (C-1007D)			
		CAPACITOR			
C1	1-123-611-00	ELECT 1MF	20%	50V	
C2	1-124-224-00	ELECT 47MF	20%	6.3V	
		RESISTOR			
R1	1-247-831-00	CARBON 1K	5%	1/6W	
R2	1-247-819-00	CARBON 330	5%	1/6W	
		SWITCH			
S1	1-552-430-00	SWITCH, SLIDE			
S3	1-552-868-21	SWITCH, PUSH			
S4	1-552-868-21	SWITCH, PUSH			
S5	1-552-868-21	SWITCH, PUSH			
S6	1-552-868-21	SWITCH, PUSH			
S7	1-552-868-21	SWITCH, PUSH			

****